Item ID	Front Thickness [in] mm	Door Thickness [in] mm
BT2135B-WH	[.63] 16	[.63] 16

This profile belongs to BT2135B-WH

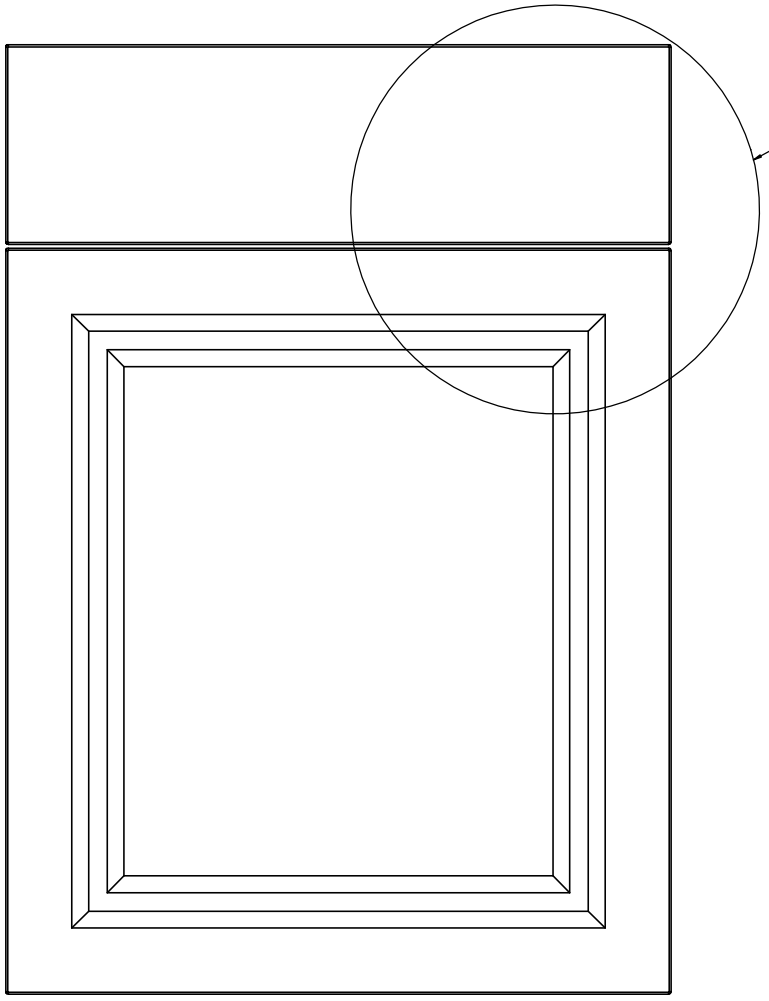

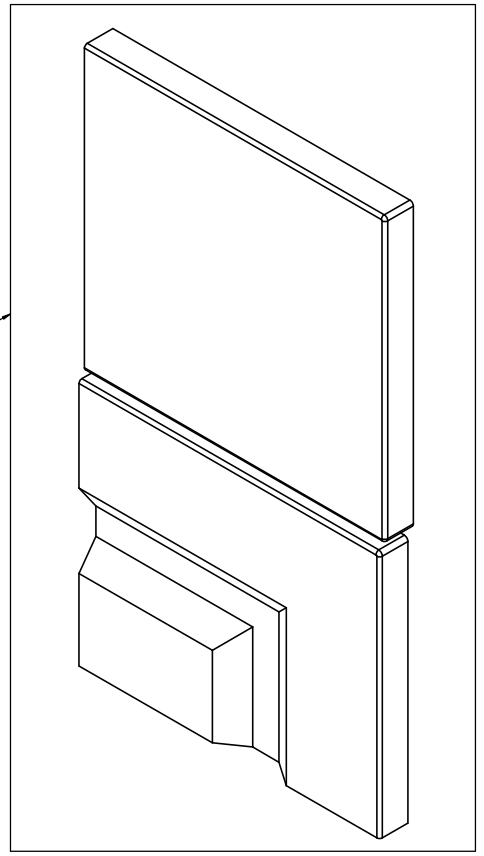

Detailed View

Profile: Benton White

PROPRIETARY AND CONFIDENTIAL
THE INFORMATION CONTAINED IN THIS DRAWING IS THE SOLE PROPERTY OF WOODCRAFTERS. ANY REPRODUCTION IN PART OR AS A WHOLE WITHOUT THE WRITTEN PERMISSION OF WOODCRAFTERS IS PROHIBITED.

UNLESS OTHERWISE SPECIFIED

DIMENSIONS ARE IN MM AND [INCHES]

TOLERANCES ARE +.039[1] -.039[1]

SCALE:1:2

Wood Crafters®

Item ID	Shelf Thickness [in] mm	Shelf Length and Width [in] mm	Depth "X" [in] mm
BT3612W-BT	N/A	N/A	[12.59] 320
BT3612W-WH	N/A		[12.44] 316
CM3612W-DK	N/A		[12.59] 320
CM3612W-WH	N/A		[12.44] 316
EH3612W-GB	N/A		[12.59] 320
BT3612W-RC	N/A		[12.59] 320
CM3612W-KG	N/A		[12.44] 316

Description					
Kitchens - Wall Cabinet 36x12in					
REV	ECO#	Description	REV'D BY DATE	CHK'D BY DATE	APRV'D BY DATE
2		New model added	11/09/17	11/09/17	11/09/17
3		Structural change	07/25/18	07/25/18	07/25/18

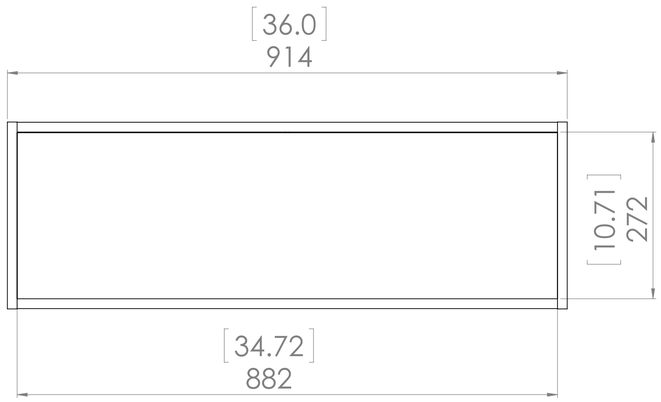

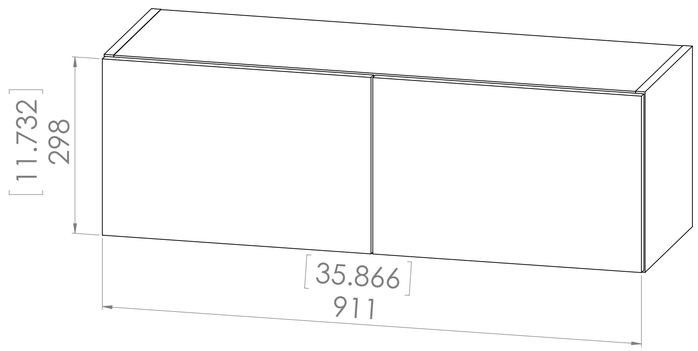

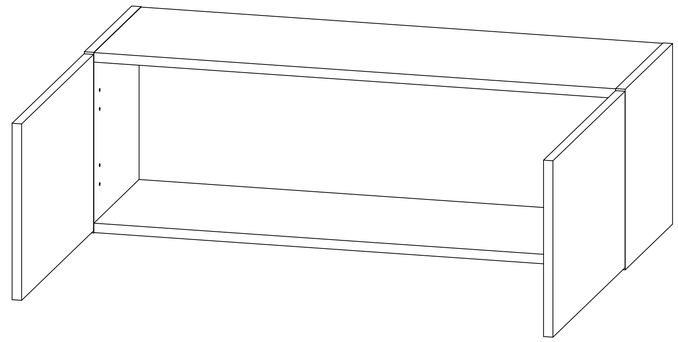

Back View

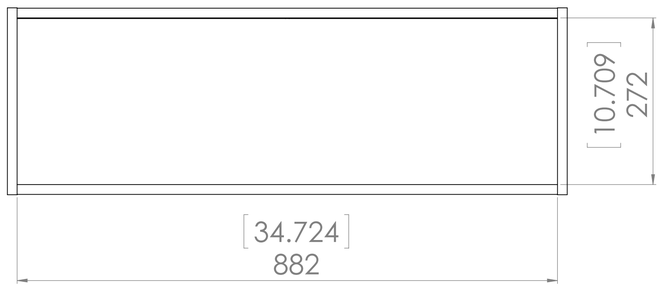

Front View (front door removed)

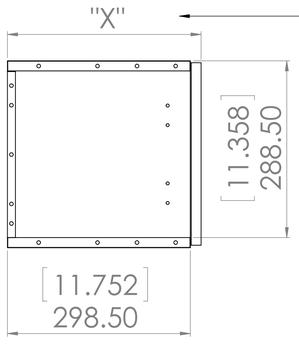

Depth "X" depends on door profile

Side View (left panel removed)

Isometric View

	NAME	SIGNATURE	DATE	
DRAWN	R. Rubio		11/09/17	MATERIAL: Plywood CM-WH. Particle Board the other Cabinets.
CHK'D	R. Rubio		11/09/17	
APPV'D	R. Rubio		11/09/17	
MFG	R. Rubio		11/09/17	

PROPRIETARY AND CONFIDENTIAL

THE INFORMATION CONTAINED IN THIS DRAWING IS THE SOLE PROPERTY OF WOODCRAFTERS. ANY REPRODUCTION IN PART OR AS A WHOLE WITHOUT THE WRITTEN PERMISSION OF WOODCRAFTERS IS PROHIBITED.

UNLESS OTHERWISE SPECIFIED

DIMENSIONS ARE IN mm. AND [INCHES]

TOLERANCES ARE +/- 1[0.039]

SCALE:1:5

Wood Crafters®

Wall Cabinet_36x12in

3

SCALE:1:5

SHEET 1 OF 1