Replacement Parts List

ecoGen10000

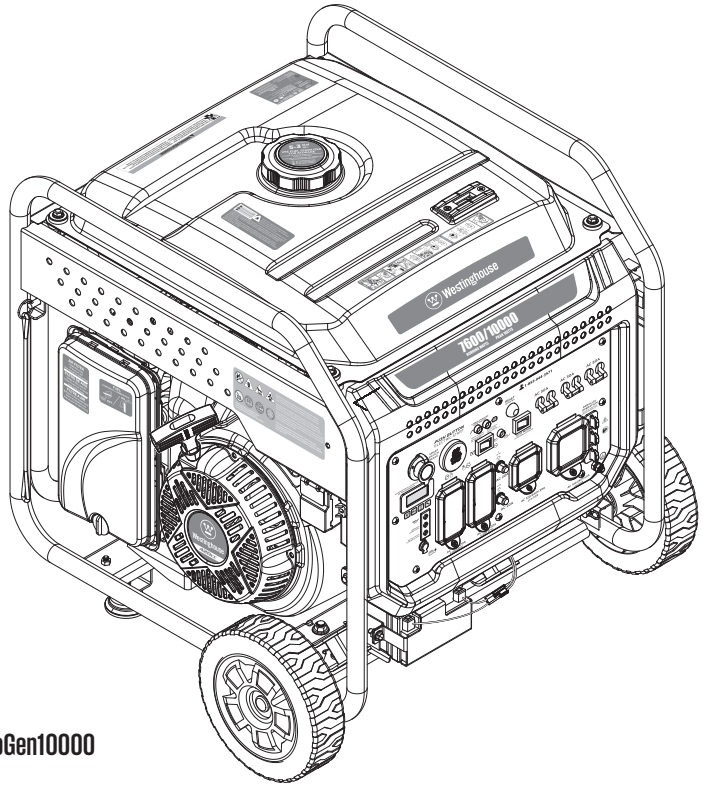

ecoGen10000

WESTINGHOUSE OUTDOOR POWER EQUIPMENT
777 Manor Park Drive, Columbus, OH 43228 | WestinghousePortablePower.com
If you have questions or need assistance, please call customer service at 855-944-3571.

123735 Rev02 05/23
ecoGen10000 Rev 01

ecoGen10000
Exploded View A
Generator

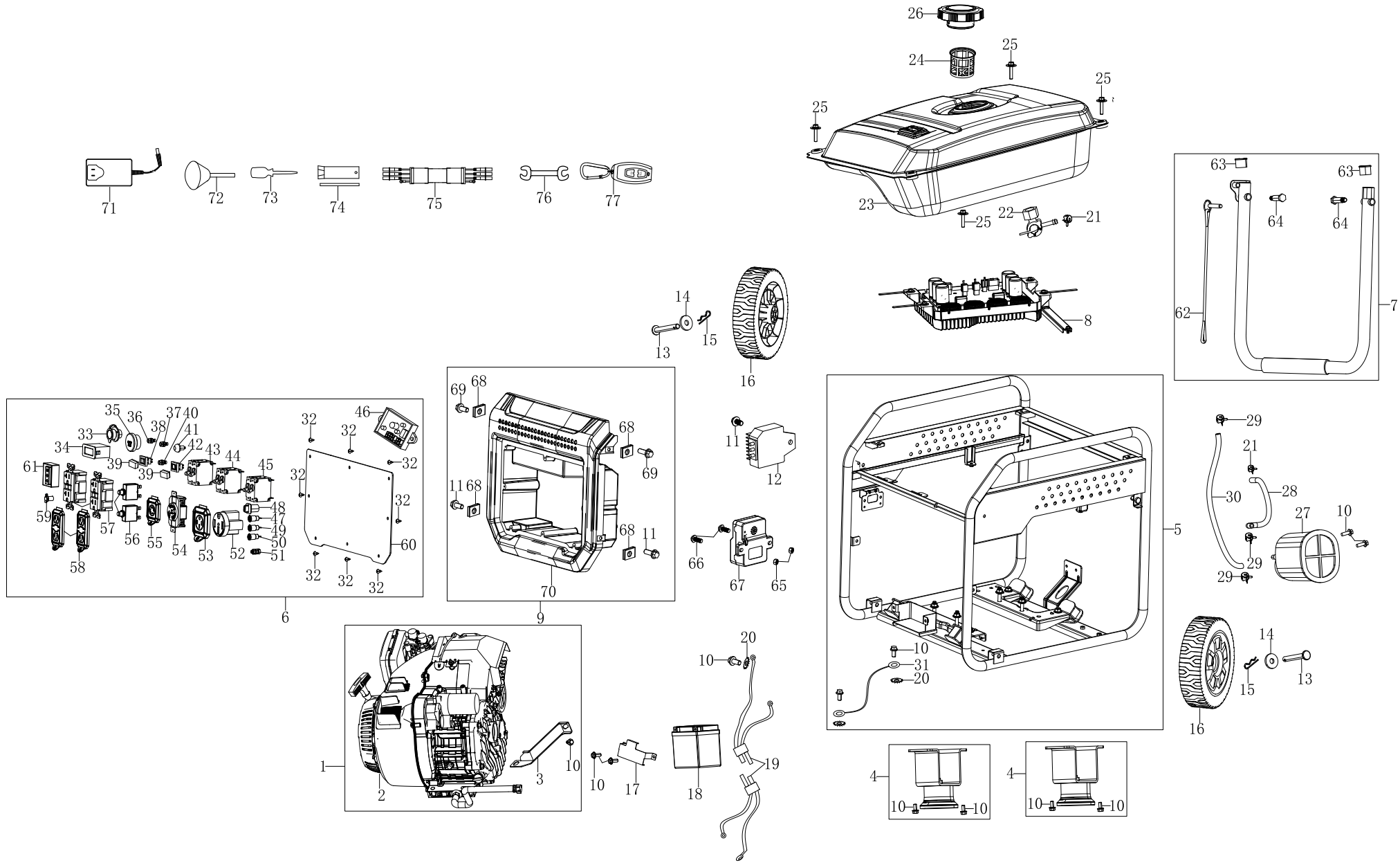

ecoGen10000
Parts List A (Generator)

No.	Description	Part Num.
1	ENGINE DH420i ASSEMBLY	100240014
2	ENGINE DH420i	1148420210076
3	BRACKET, AIR CLEANER	449902
4	FOOT BRACKET KIT ASSEMBLY	100380022
5	FRAME KIT ASSEMBLY	100090005
6	PANEL ASSEMBLY	507173
7	HANDLE ASSEMBLY	100500003
8	INVETER KIT ASSEMBLY	100100023
9	PANEL REAR COVER KIT ASSEMBLY	100140015
10	BOLT M6*12	91327
11	BOLT M6*16	91398
12	DC VOLTAGE REGULATOR KIT	507154
13	AXLE	524320
14	FLAT WASHER 30*10.5*2.5	94294
15	COTTER PIN	548302
16	WHEEL	523308
17	BATTERY HOLDER	507174-116
18	BATTERY	511088
19	BATTERY WIRING	507041
20	TOOTH TYPE GASKET 6	94003
21	FUEL LINE CLIP 8.5	94402
22	FUEL SWITCH	518621
23	FUEL TANK	507086-221
24	FUEL SCREEN	518801
25	BOLT M6*25	91460
26	FUEL TANK CAP	519215
27	CARBON CANISTER ASSEMBLY	543601L
28	VENT HOSE "AIR FILTER to CARBON CANISTER"	95122
29	FUEL LINE CLIP 9.5*0.8	503034
30	VENT HOSE "FUEL TANK to CARBON CANISTER"	95139
31	GROUND WIRE	500488
32	SCREW M5*12	92139
33	AVIATION SOCKET	9320
34	V.F.T. METER	6041

No.	Description	Part Num.
35	PUSH START BUTTON	536002
36	CO INDICATOR LIGHT	9236
37	CO INDICATOR LIGHT	9322
38	BATTERY ON/OFF SWITCH	9321
39	WATERPROOF CAP	9079
40	BATTERY INDICATOR	9323
41	VOLTAGE RESET SWITCH	9230
42	ECO SWITCH	9224
43	BREAKER 32A	6434-32
44	BREAKER 30A	6434-30
45	BREAKER 50A	6434-50
46	REMOTE CONTROL MODULE	507181
47	PARRALLEL SOCKET	9327
48	DUST COVER	9330
49	PARRALLEL SOCKET	9329
50	PARRALLEL SOCKET	9328
51	GROUNDING BOLT	6386
52	L14-50R RECEPTACLE	6649
53	L14-50R WATERPROOF COVER	6850
54	L14-30R RECEPTACLE	6385
55	L14-30R WATERPROOF COVER	6848
56	20A THERMAL PROTECTOR	6439-20
57	5-20R GFCI RECEPTACLE	6275
58	5-20R WATERPROOF COVER	6845
59	CHARGING SOCKET	9226
60	CONTROL PANEL BODY	9184
61	T.C.I. MODULE	9292
62	HANDLE LOCKING PIN	503842
63	HANDLE PLUG	527613
64	BOLT M8*10.5*48.5	527611
65	NUT M4	90093
66	SCREWS M4*16	92270
67	CO MODULE	599098
68	LOCK CLIP	500060
69	BOLT M6*35	91336

ecoGen10000
Parts List A (Generator)

No.	Description	Part Num.
70	AFTER THE PANEL COVER	507149
71	CHARGER	511076
72	FUNNEL	507172
73	SCREWDRIVER	99506
74	SPARK PLUG SLEEVE	99020
75	PARALLEL NETWORK CABLE ASSEMBLY	507096
76	FIXED WRENCH	99001
77	REMOTE KEY	9054

ecoGen10000
Exploded View B
Engine

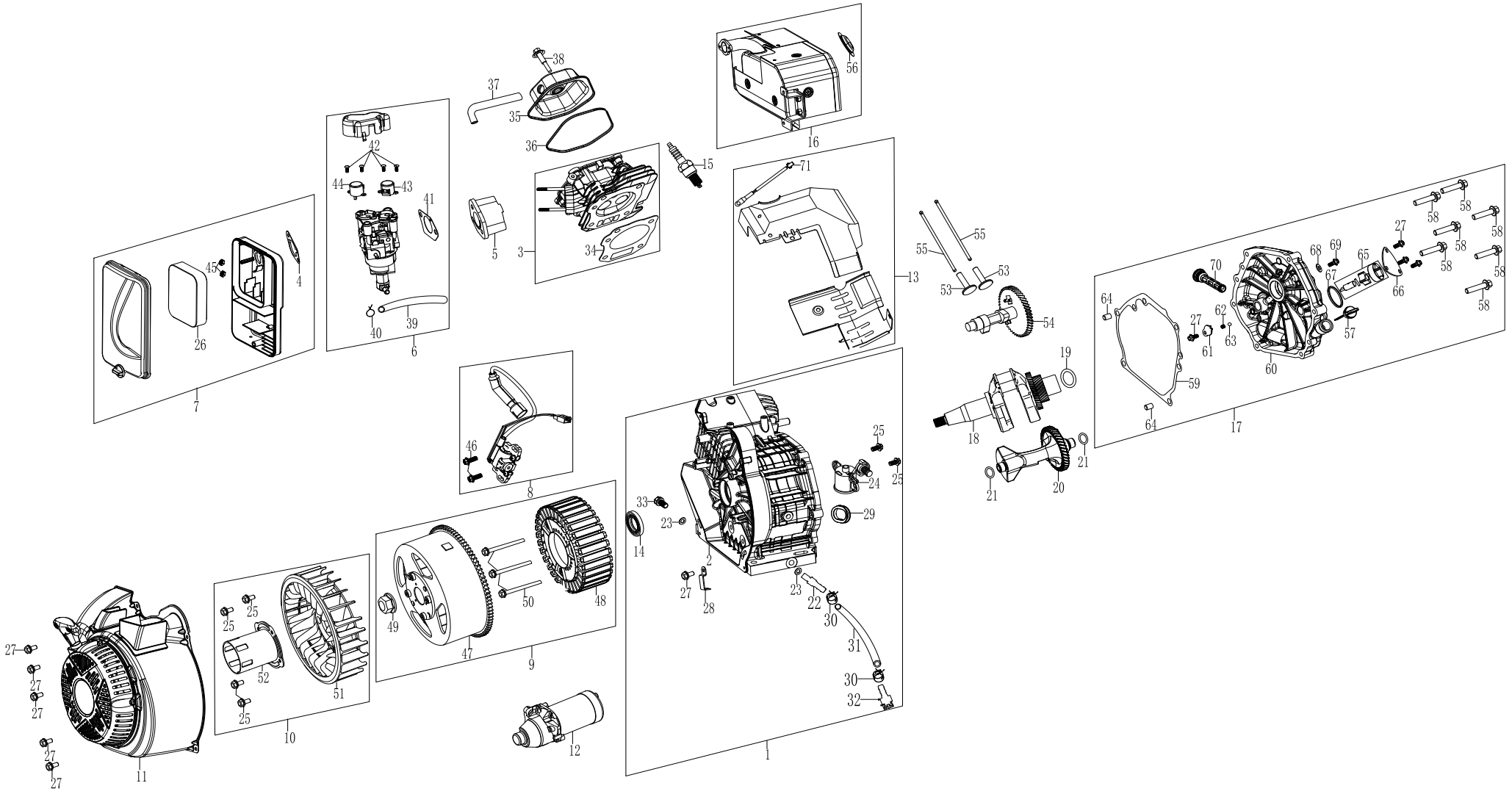

ecoGen10000
Parts List B (Engine)

No.	Description	Part Num.
1	CRANKCASE ASSEMBLY	50120082
2	CRANKCASE	440201
3	CYLINDER HEAD ASSEMBLY	50020110
4	AIR FILTER GASKET	96086
5	CARBURETOR CONNECTION BLOCK	442301
6	CARBURETOR ASSEMBLY	50040158
7	AIR FILTER ASSEMBLY	50030087
8	IGNITION COIL KIT ASSEMBLY	50100052
9	ROTOR & STATOR KIT ASSEMBLY	50570004
10	IMPELLER KIT ASSEMBLY	50170017
11	RECOIL STARTER ASSEMBLY	50090093
12	STARTER MOTOR ASSEMBLY	50260022
13	SHROUD KIT ASSEMBLY	50130027
14	CRANKCASE OIL SEAL	93544
15	SPARK PLUG	97108
16	EXHAUST MUFFLER KIT ASSEMBLY	50240040
17	CRANKCASE COVER ASSEMBLY	50200071
18	CRANKSHAFT	440301
19	FLAT WASHER 35.1×51×0.5	94291
20	BALANCE SHAFT	440302
21	FLAT WASHER 16.1×29×0.5	94292
22	SEALING SCREW	449915
23	FLAT WASHER 12	94004
24	OIL SENSOR ASSEMBLY	265102
25	BOLT M6*16	91329
26	FILTER ELEMENT	5217
27	BOLT M6*12	91325
28	WIRE CLIP	449901
29	WIRE SLEEVE	449903

No.	Description	Part Num.
30	CLAMP	449916
31	OIL OUTLET PIPE	449913
32	OIL DRAIN ASSEMBLY	449917
33	OIL DRAIN BOLT	91817
34	CYLINDER HEAD GASKET	96089
35	CYLINDER HEAD COVER	261104
36	HEADCOVER SEAL WASHER	96075
37	BLAST PIPE	95652
38	CYLINDER HEAD COVER FASTENING BOLT ASSEMBLY	91819
39	FUEL HOSE "FUEL TANK to CARBURETOR"	95415L
40	FUEL HOSE CLIP	94403
41	CARBURATOR GASKET	96081
42	BOLT M3*8	92239
43	THROTTLE STEPPER "INCLUDE VOLTAGE"	449910
44	CHOKE STEPPER "INCLUDE VOLTAGE"	507178
45	NUT M6	90016
46	BOLT M6*20	91330
47	ROTOR	449905
48	STATOR	449904
49	FLYWHEEL NUT	90004
50	BOLT M8*70	91631
51	IMPELLER	444601
52	STARTER PULLY	444501
53	VALVE LIFTER	266101
54	CAMSHAFT ASSEMBLY	442001
55	PUSH ROD	261901
56	SPARK ARRESTER	9212
57	DIPSTICK ASSEMBLY	265602-295
58	BOLT M8*40	91349

ecoGen10000
Parts List B (Engine)

No.	Description	Part Num.
59	CRANKCASE GASKET	96249
60	CRANKCASE COVER	440101
61	PRESSURE RELIEF VALVE COVER	440601
62	PRESSURE RELIEF VALVE SPRING	449907
63	STEEL SHOT	449908
64	CRANKCASE LOCATING PIN	240901
65	OIL PUMP ASSEMBLY	399900
66	OIL PUMP COVER	390600
67	OIL PUMP COVER SEALING RING	399912
68	FLAT WASHER 8×16×1.5	94257
69	BOLT M8*16	91343
70	OIL FILTER	449911
71	TEMPERATURE SENSOR	504739