Coleman

Gas Barbecue
Use, Care & Assembly Manual
With Grill Lighting Instructions
Model 9949 Series (LP Gas)

ASSEMBLER/INSTALLER:
Leave these instructions with the consumer.

CONSUMER/USER:
Read all instructions and keep in a safe place for future reference.

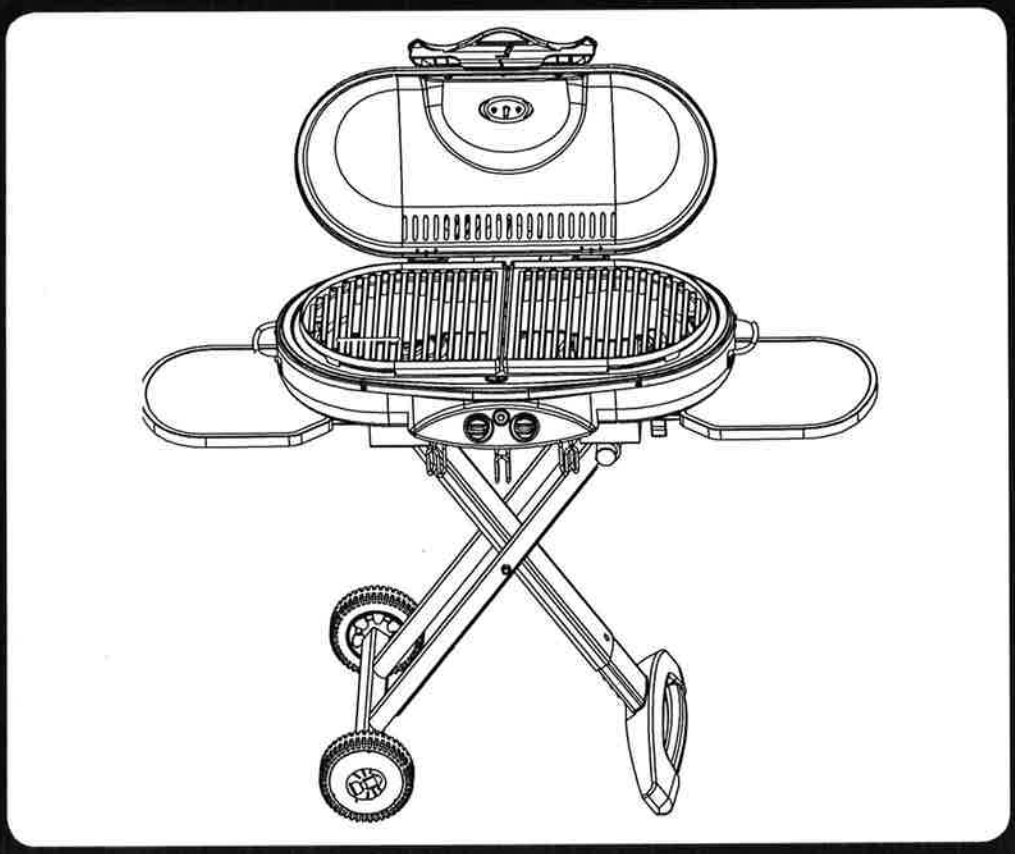

www.coleman.com

NOTE:
Propane cylinder is not included.

IMPORTANT

Read this manual carefully before assembling, using or servicing this grill. Keep this manual for future reference. If you have questions about assembly, operation, servicing or repair of this grill, please call Coleman at 1-800-835-3278 or TDD: 1-316-832-8707. In Canada call 1-800-387-6161.

For Outdoor Use Only

Contents

Contents 1
Technical Characteristics 1
General Safety Information 1
General Installation 2
Portable L.P. Gas Barbecue Cylinders 2
Grill Features 3
Assemble Grill 4
Installing 1 lb. Propane Cylinder 5
Burner and Orifice 6
Leak Testing - Disposable LP Gas Cylinders 6
How to Check for Leaks 6
Fixing A Fuel Leak 6
Start-Up Check List 6
Lighting Instructions 7
Lighting The Burners 7
Shutting Off the Grill 8
General Use and Correct Burner Flames 8
Grilling Tips and Hints 8
In Case of Grease Fire 9
Cooking Methods 9
Care, Maintenance and Cleaning 9
Cleaning the Venturi 10
Moving and Storage 11
Troubleshooting 11
Replacement Parts List — 9949 Series 14
Warranty 15

Technical Characteristics

Input Rating: 2 burners @ 11,000 BTU/H each.
Category: Pressure regulated propane
Fuel: 16.4 oz. disposable propane cylinders
Regulator: 9928 must be used

General Safety Information

This manual contains important information about the assembly, operation and maintenance of this outdoor propane appliance. General safety information is presented on this page and is also located throughout these instructions. Particular attention should be paid to information accompanied by the safety alert symbol: "⚠ DANGER", "⚠ WARNING", "⚠ CAUTION".

Keep this manual for future reference and to educate new users of this product. This manual should be read in conjunction with the labeling on the product.

Safety precautions are essential when any mechanical or propane fueled equipment is involved. These precautions are necessary when using, storing, and servicing. Using this equipment with the respect and caution demanded will reduce the possibilities of personal injury or property damage.

The following symbols shown below are used extensively throughout these instructions. Always heed these precautions, as they are essential when using any mechanical or propane fueled equipment.

⚠ DANGER

DANGER indicates an imminently hazardous situation which, if not avoided, will result in death or serious injury.

⚠ WARNING

WARNING indicates a potentially hazardous situation which, if not avoided, could result in death or serious injury.

⚠ CAUTION

CAUTION indicates a potentially hazardous situation which, if not avoided, may result in minor or moderate personal injury, or property damage.

⚠ DANGER

If you smell gas:
1. Shut off gas to the appliance.
2. Extinguish any open flame.
3. Open lid.
4. If odor continues, keep away from the appliance and immediately call your gas supplier or your fire department.

⚠ WARNING

1. Do not store or use gasoline or other flammable liquids or vapors in the vicinity of this or any other appliance.
2. An LP cylinder not connected for use shall not be stored in the vicinity of this or any other appliance.

CALIFORNIA PROPOSITION 65:
WARNING: This fuel, and by products of combustion of this fuel, contain chemicals known to the state of California to cause cancer, birth defects, or other reproductive harm.

⚠ DANGER

- FOR OUTDOOR USE ONLY. NEVER operate grill in enclosed areas, as this could lead to gas accumulating from a leak, causing an explosion or a carbon monoxide buildup which could result in injury or death. DO NOT use in garages, breezeways, sheds or any enclosed area.
- NOT FOR USE BY CHILDREN.
- If these instructions are ignored, a hazardous fire or explosion could result in physical injury, death or property damage!

⚠ WARNING

- DO NOT move grill while it is lit.
- Keep outdoor cooking gas appliance area clear and free from combustible materials, gasoline and other flammable vapors and liquids.

⚠ WARNING

- NEVER place more than 20 pounds on a side table. DO NOT lean on grill.
- NEVER use charcoal briquettes or lighter fluid in a gas grill.
- Grill is hot when in use; to avoid burns, DO NOT touch any hot grill surface. Keep children and pets away from hot grill.
- NEVER leave the grill unattended while it is in use.
- It is your responsibility to assemble, install, operate and care for your gas grill properly.
- DO NOT use gas grill indoors.
- Under some circumstances, propane may lose the distinctive odor that was added. Other strong odors may hide or mask the odor of propane. Colds, allergies, sinus congestion, and the use of tobacco, alcohol or drugs may impair your ability to detect the odor of propane.

General Installation

- Installation must conform with local codes or, in the absence of local codes, with either the National Fuel Gas Code, ANSI Z223.1/NFPA 54, Natural Gas and Propane Installation Code, CSA B149.1, or Propane Storage and Handling Code, CSA B149.2, as applicable.
- To check local codes, see your local L.P. gas dealer or natural gas company listed in the Yellow Pages for recommended installation procedures and regulations.

⚠ WARNING

This appliance is not to be installed in or on a recreational vehicle and/or boat.

Follow these safety rules before each use:

1. A minimum clearance of 24 inches from the left, right, back and bottom sides of the grill must be maintained between the grill and any combustible construction such as wood siding of a building.
2. Never locate the grill under an unprotected combustible material or overhang.
3. Do not obstruct the flow of combustion and ventilation air.
4. The grill should be level and not facing directly into the wind.

⚠ WARNING

A liquid propane tank, not connected for use with this gas barbecue, shall not be stored in the vicinity of this or any other appliance.

Connections must comply with local requirements and are the sole responsibility of the person performing the work.

⚠ WARNING

- **DO NOT attempt to adjust the regulator as this could create a situation causing personal injury or property damage.**

Portable L.P. Gas Barbecue Cylinders

Liquefied Petroleum gas (abbreviated L.P. gas or propane), is highly flammable. It becomes liquid when stored under high pressure inside a cylinder and vaporizes when released. L.P. gas is heavier than air and tends to collect in low areas. It is important that there are no leaking connections on your gas grill that could cause a fire or explosion (see the section titled "LEAK TESTING").

Portable LP gas grills require a fuel delivery system which is comprised of a valve [A], a regulator [B] with vent hole [C], an L.P. gas supply cylinder [D], (Fig. 1) Illustration in Fig. 1 is for description purposes only.

Cylinder Specifications

- All L.P. gas cylinders used with this appliance shall be constructed and marked in accordance with the Specifications for L.P. Gas Cylinders of the U. S. Department of Transportation (DOT) or the National Standard of Canada, CAN/CSA-B339, Cylinders, Spheres and Tubes for Transportation of Dangerous Goods; and Commission, as applicable; and a cylinder connection device compatible with the connection for outdoor cooking appliances.
- Read labels on the L.P. Gas Supply Cylinder.

⚠ WARNING

Your new barbecue grill is equipped with a CGA # 600 regulator [B]. DO NOT attempt to connect this regulator to any other disposable L.P. cylinder not equipped with a mating CGA # 600 fitting [E]. This grill may only be used with the pressure regulator supplied with this unit, or pressure regulators specified by Coleman for use with this unit. Replacement regulators must only be those specified by Coleman. (Fig. 1)

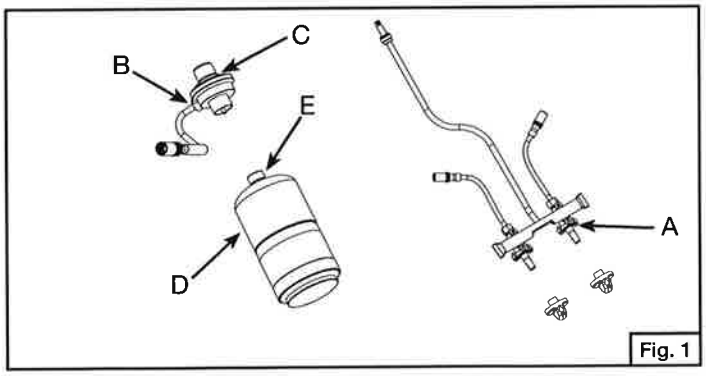

Fig. 1

⚠ DANGER

- NEVER store a spare L.P. gas supply cylinder under the grill body or inside the grill enclosure or in the vicinity of any heat producing appliance. (Fig. 2)

Failure to follow this information exactly could result in an explosion and/or fire causing death or serious injury.

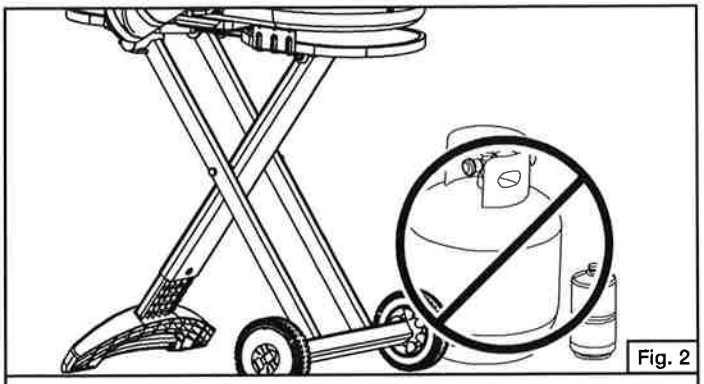

Fig. 2

REPRESENTATIVE ILLUSTRATION

Grill Features

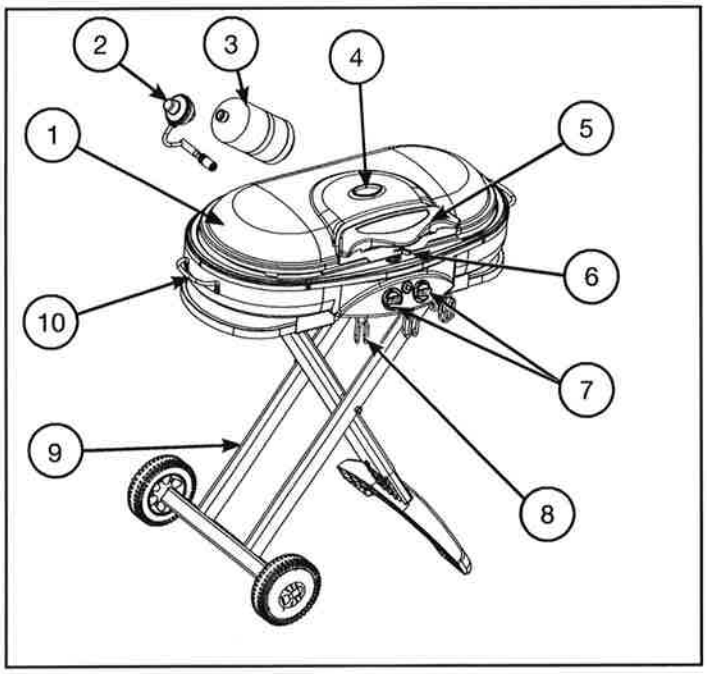

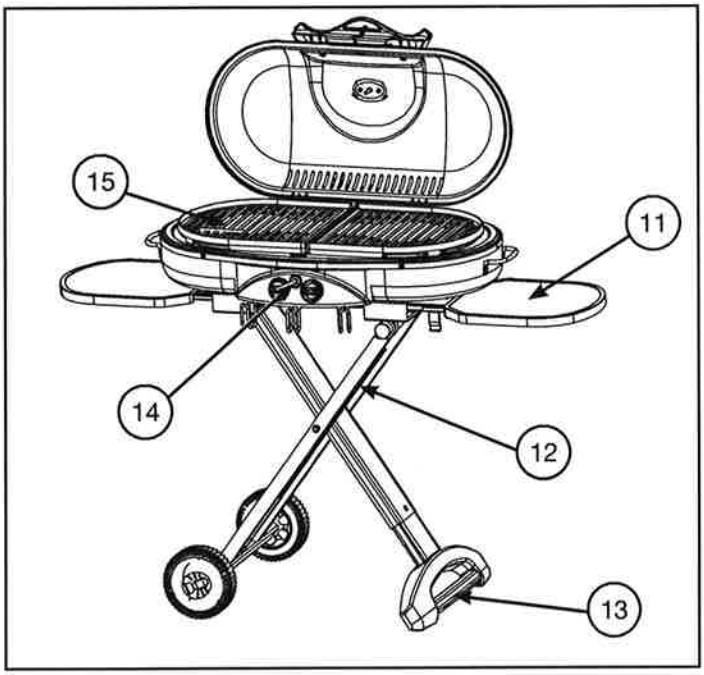

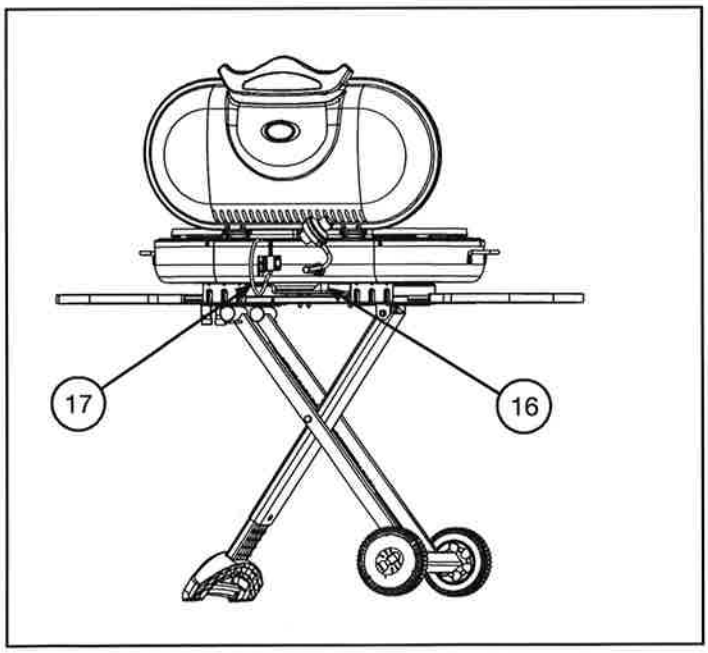

1. Grill Lid
2. Regulator
3. Disposable Cylinder (Not Included)
4. Thermometer
5. Lid Handle
6. Lid Release Latch
7. Control Knob
8. Tool Holder
9. Legs w/ Wheels
10. Carry Handle
11. Side Table
12. Match Extension (Store on leg)
13. Towing Handle
14. Electronic Igniter
15. Grilling/Cooking Surface
16. Drip Tray
17. Cylinder Mount

Assemble Grill

IMPORTANT: Remove all packing material prior to assembly/use.

Assemble Wheels and Towing Handle

- Remove grill, wheels, handle, and regulator from packaging.
- Inspect all packing and remove all parts.
- See carton for parts included with your unit.
- Assemble wheels to grill base. Attach each wheel to axle using one bolt and one washer. (Fig. 3, Fig. 4)

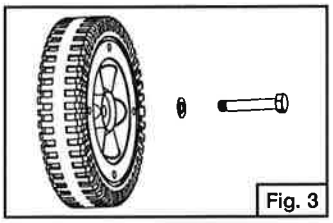
Fig. 3

NOTE: Use wrench provided.



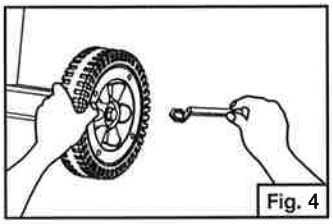
Fig. 4

- Press one hub cap into each wheel (Fig. 5)

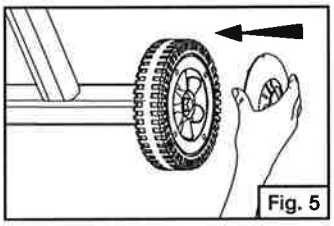
Fig. 5

- Insert towing handle into bracket on grill stand. (Fig. 6)

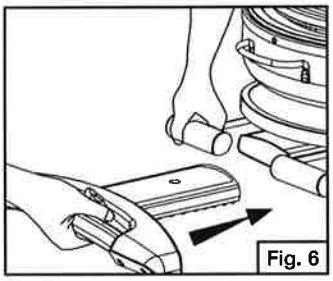
Fig. 6

- Press down button on towing handle and continue to push handle in until it locks in first hole on bracket. (Fig. 7)

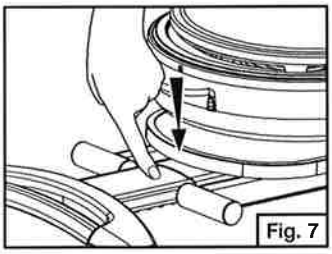
Fig. 7

- Once handle is locked in position, the grill can easily be moved to any location in your campsite or backyard. (Fig. 8)

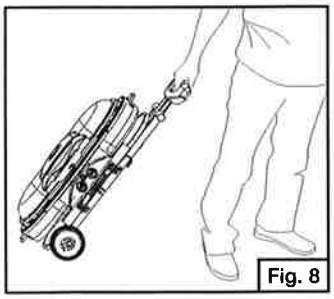
Fig. 8

Set up the Grill

- Place foot on plastic towing handle, grasp metal handle on grill and lift until stand is fully extended. (Fig. 9)

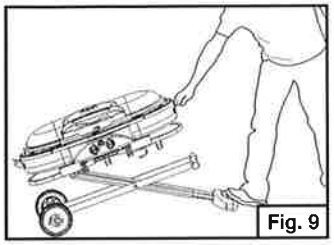
Fig. 9

- Continue to pull grill handle toward you until stand is fully extended. (Fig. 10)

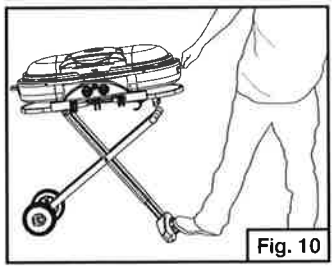
Fig. 10

- Lower grill and slide grill back until leg extensions lock into brackets on bottom of grill stand. (Fig. 11, Fig. 12, Fig. 13)

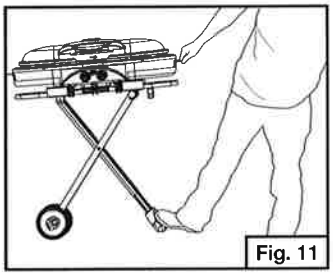
Fig. 11

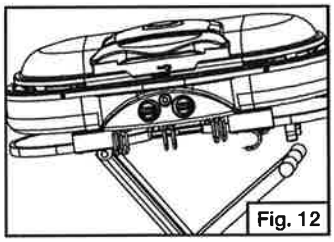
Fig. 12

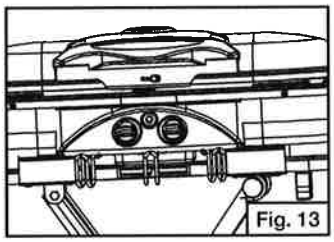
Fig. 13

Install the Drip Tray

- Install drip tray below rear of grill. (Fig. 14)

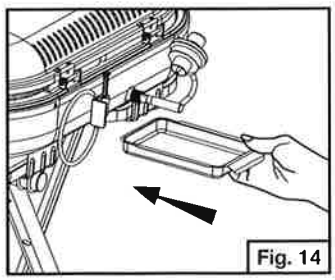
Fig. 14

Installing 1 lb. Propane Cylinder

NOTE: Your 9949 Series grill is set up from the factory to use a 1 lb. disposable propane cylinder.

⚠ WARNING

Only cylinders marked "Propane" must be used.

⚠ WARNING

This procedure MUST be performed OUTDOORS only! Read and follow the directions on the cylinder.

⚠ DANGER

- NEVER store a spare L.P. gas supply cylinder under the grill body or inside the grill enclosure or in the vicinity of any heat producing appliance. (Fig. 2)

Failure to follow this information exactly could result in an explosion and/or fire causing death or serious injury.

⚠ CAUTION

Tighten by hand only. DO NOT use tools.

- Before attaching propane cylinder make sure burner valves are in the OFF position. (Fig. 15)

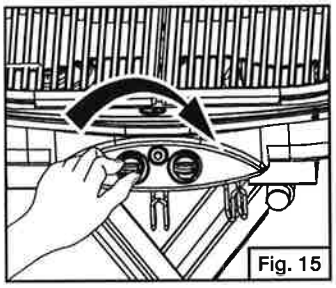
Fig. 15

- Remove plastic cap from top of propane cylinder and screw cylinder into regulator hand tight. (Fig. 16)

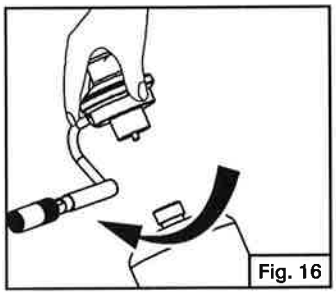
Fig. 16

- Press on cylinder support on back of grill and swing out. (Fig. 17)

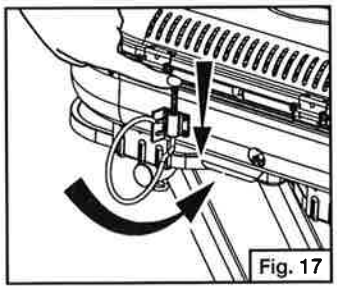
Fig. 17

- Screw regulator into grill hand tight. (Fig. 18)

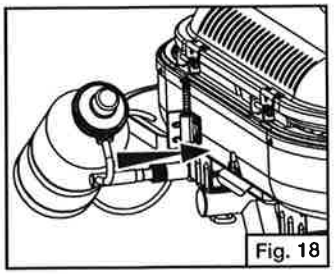
Fig. 18

- Place cylinder into cylinder support. (Fig. 19)

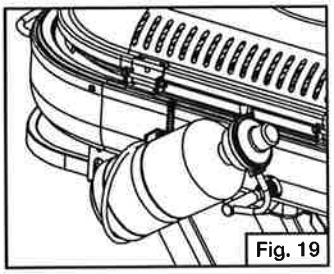
Fig. 19

- Never operate grill with propane cylinder in an inverted position. (Fig. 20)

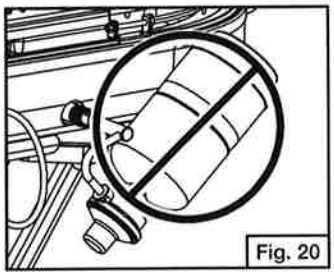
Fig. 20

- To open lid, move lever to OPEN position and lift up. (Fig. 21)

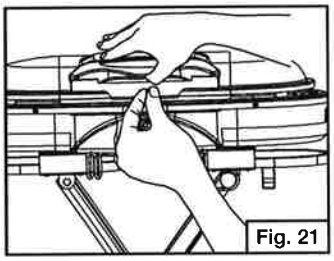
Fig. 21

- Place grill grate over each burner. (Fig. 22)

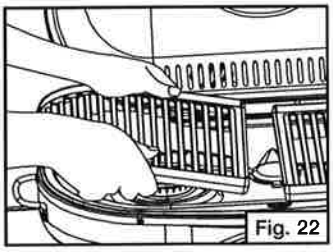
Fig. 22

⚠ WARNING

DO NOT operate the grill with side tables in storage position. Damage will occur and void the warranty.

- To extend side tables, grasp hold of side tables on bottom of grill and slide out until fully extended. (Fig. 23)

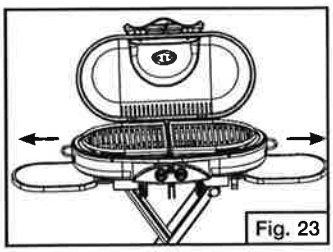
Fig. 23

Burner and Orifice

- Proper location of the burner with respect to the orifice is important. To verify the proper installation of the venturi tube, use a screwdriver to remove the grill top. The venturi tube must be located over the orifice fitting. See Fig. 24 (grill top not shown).

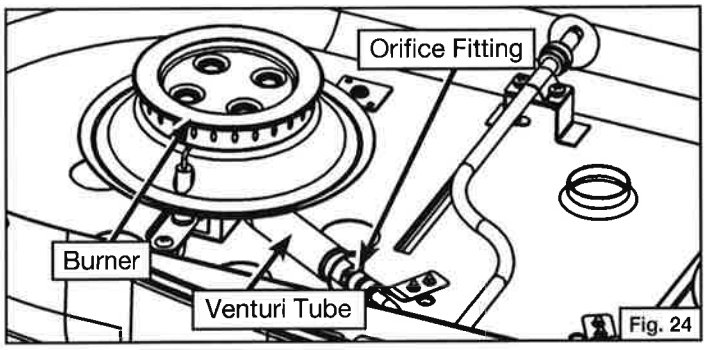

Fig. 24

- Check and clean the burner/venturi tubes for insects and insect nests. A clogged tube can lead to a fire beneath the appliance.

Leak Testing - Disposable LP Gas Cylinders

⚠ DANGER

To Prevent Fire or Explosion Hazard:
- NO SMOKING. DO NOT use or permit sources of ignition in the area while doing a leak test.
- Perform leak tests outdoors only.
- NEVER perform a leak test with fire or flame.

How to Check for Leaks

1. Make a soapy solution of equal parts mild liquid dishwashing detergent and water.
2. Turn off all burner control knobs.
3. Apply a soap solution to the connections indicated with the arrows. (Fig. 25) If bubbles appear at these areas, a leak is indicated.

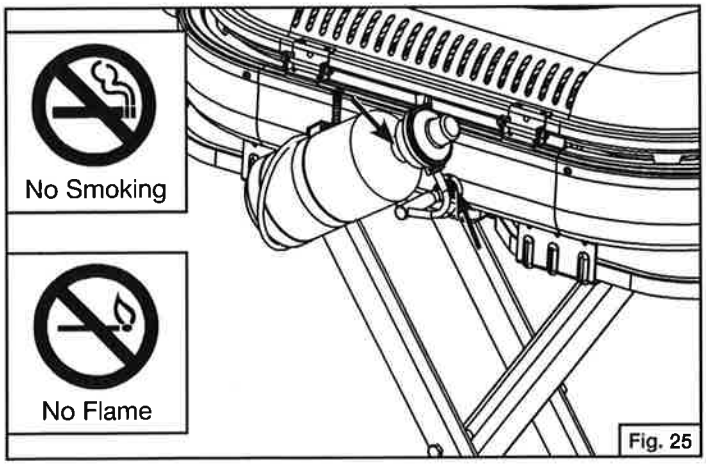

Fig. 25

Fixing A Fuel Leak

If you detect a leak:

1. Stop a leak by tightening the loose joint, or by replacing the faulty part with a replacement part recommended by Coleman. DO NOT attempt to repair the cylinder if it should become damaged; the cylinder MUST be replaced.
2. If you are unable to stop a leak, remove the cylinder from the grill. DO NOT use the grill until the leak is corrected.

When to test for leaks:

1. Perform a leak test each time the gas supply cylinder is connected to the regulator. Leak test anytime a part of the gas system is replaced.

Start-Up Check List

⚠ WARNING

Failure to follow these safety steps before using the grill each time could result in a fire that could be hazardous to you, your appliance or property. It is especially important to observe these steps after the grill has been stored, moved or cleaned.

1. Regularly check the burner venturi tubes for blockage from an insect nest. Read "Cleaning the Venturi" in the section titled "Care, Maintenance, and Cleaning", and also the section titled "Troubleshooting".
2. Check that all the burner venturi [A] are set over the valve outlets [B] correctly. The valve orifice [C] must be inside the venturi. (Fig. 26)
3. Use only the gas specified.
4. Keep the grill on a level surface.
5. Keep the grease pan empty at start up.

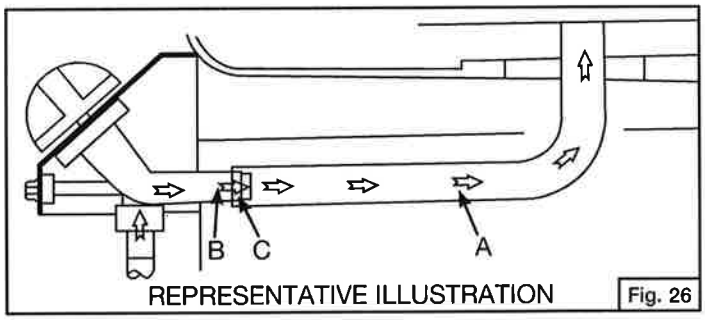

REPRESENTATIVE ILLUSTRATION
Fig. 26

⚠ CAUTION

DO NOT add charcoal or lighting fluid!

Lighting Instructions

⚠ WARNING

THE FOLLOWING RULES MUST ALWAYS BE FOLLOWED IN THIS ORDER (FIG. 27):

1. OPEN THE GRILL LID! Any attempt to light the grill with the lid down could cause an explosion.
2. Check that the burner control knobs are turned to "OFF".
3. DO NOT stand with your head or arms over the grill.

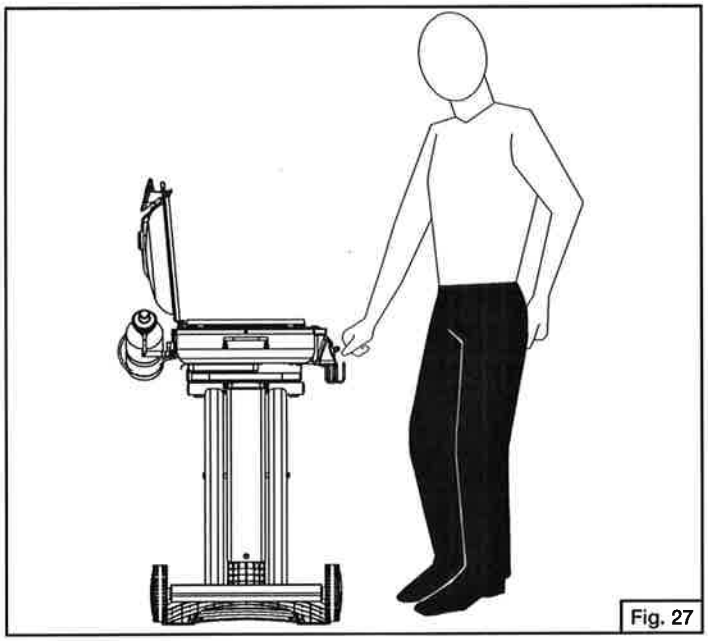

Fig. 27

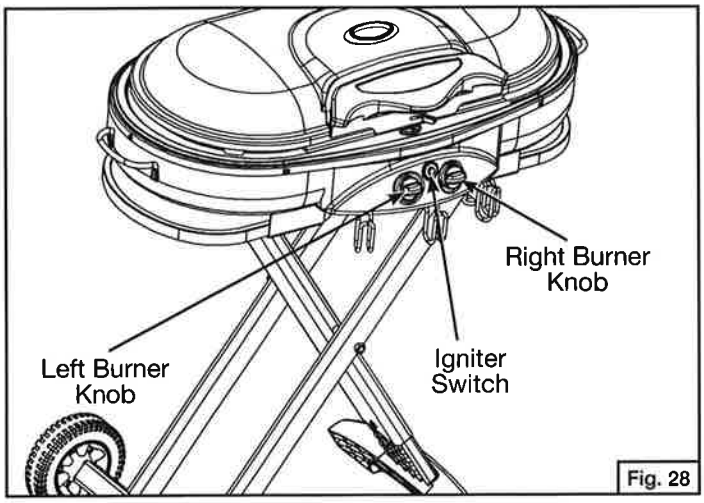

Fig. 28

Lighting The Burners

INSTASTART™ Electronic Ignition

1. Push and turn burner valve to HIGH/LIGHT then push igniter button repeatedly until burner lights. (Fig. 28 and 29)
2. If ignition does not occur in 5 seconds, turn burner control(s) off, wait 5 minutes, and repeat the lighting procedure.

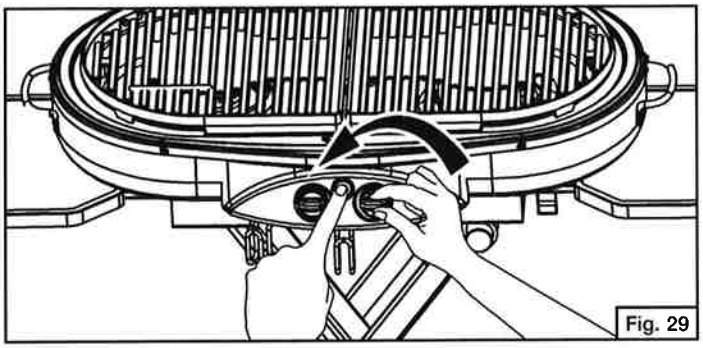

Fig. 29

Match Lighting

1. Strike and place the burning long wooden match (or use the match extension or a butane lighter with extension) through the spaces in the grill grates near the ports of the burner. (Fig. 30)
2. Push and turn the control knob counterclockwise to the "HIGH" position.
3. Repeat steps 1 and 2 to light the second burner.

⚠ CAUTION

Use a LONG wooden match or a butane lighter with an extension. Make sure all burner controls are off except for the burner being lighted. If a long-reach match or lighter is not accessible, use the match extension. Insert a match in the holder end of the extension, strike and place the burning match near the BURNER being operated.

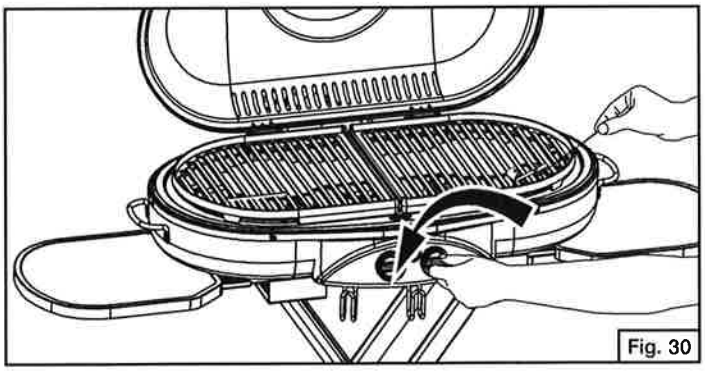

Fig. 30

Shutting Off the Grill

⚠ CAUTION

DO NOT touch hot grill parts with your bare hands! You MUST use protective gloves.

- Turn all burner control knobs to off. (Fig. 31)

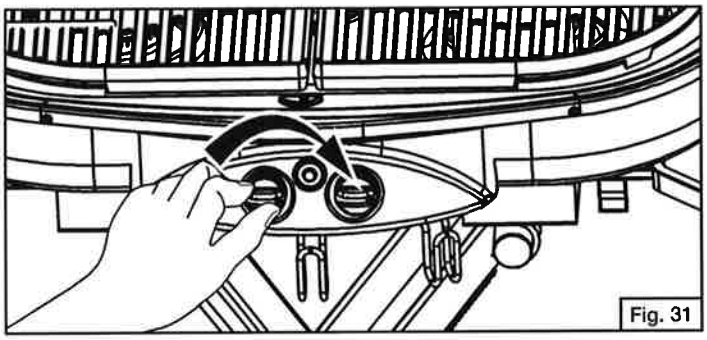

Fig. 31

⚠ CAUTION

Be certain the disposable cylinder is disconnected when the grill is not in use.

General Use and Correct Burner Flames

⚠ WARNING

- Keep the grill area clean and free from combustible materials, gasoline and other flammable vapors, liquids, and spare L.P. cylinders.
- To avoid the possibility of tipping over the grill, NEVER place more than 20 pounds on the side table. A filled 4-quart aluminum pot weighs approximately 10 pounds.
- DO NOT obstruct the flow of combustion and ventilation air.
- Keep the ventilation opening(s) of the L.P. cylinder enclosure free and clear of debris.
- A barbecue grill becomes hot during use. DO NOT touch grates, or cooking surfaces.
- Be sure to tighten all hardware (screws, nuts, bolts, etc.) at least once a year or before each grilling season.

Condition The Grill

- Before using the grill for the first time, or after storage, operate the grill 15 minutes on the high setting with the lid closed, to burn away oil.
- Once the oil has burned away, check the burner flame per the next step.

The Burner Flame

- Open the grill lid. The cooking grates should be in place.
- Keep your arms and face away from being directly above the cooking area. Look through the cooking grates and observe the burner's flame below.
- Flames should appear similar to the good flame shown in Fig. 31 and as follows:
- A good flame should be blue with a yellow tip.
- Some yellow tips on flames up to 1 inch in length are acceptable as long as no carbon or soot deposits appear.
- If flames are excessively yellow and irregular, the oil residue may not be completely burned off, or the venturi may be clogged or may not be properly positioned over the orifices. Allow the grill to cool before repositioning the venturi over the valve and orifices.
- Grills that have been in use for a while sometimes begin to show more yellow flame. A build-up of food deposits, fats or cooking seasonings can cause yellowing flames. Clean the burner to remove residue and check for clogged burner holes or a blocked venturi. Refer to the section titled "Cleaning the Venturi".
- Regular use of your grill will actually help keep it operating more smoothly.
- Each grill may heat differently. Some units will heat somewhat more to the center and back of the grill. The flavor of grilled food will improve the more you use the grill and as you become familiar with it.

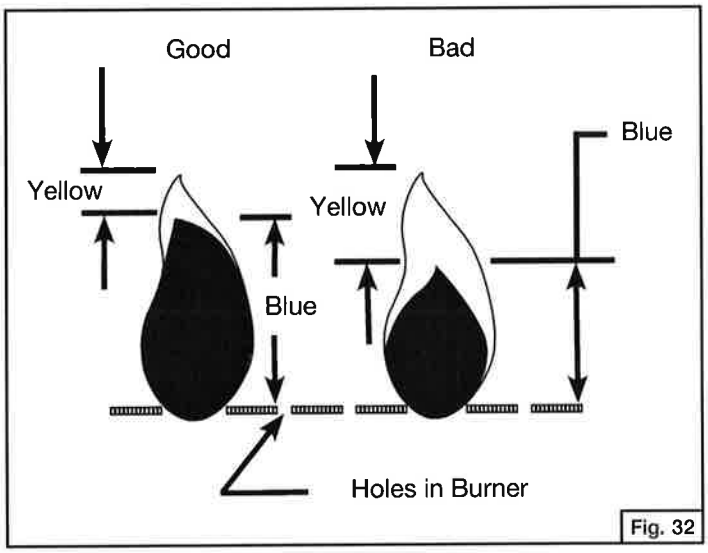

Fig. 32

Grilling Tips and Hints

Burner Control Setting Tips

- The high flame setting is too hot for direct cooking. The high flame setting is good for quick searing of meat, then finish cooking on medium or low flame settings.
- Use the high flame setting with the lid closed to preheat the grill for 5 minutes before cooking and with the lid closed for a maximum of 5 minutes after cooking to burn off grease drippings.
- Use a medium flame setting for direct cooking of steaks, pork chops, chicken and hamburgers.
- Use a low flame setting for roasts.
- Thick steaks will finish with a better texture and more juice if first seared on high flame setting and then cooked on a low flame setting.

Safe Grill Operation

- NEVER leave cooking food unattended. Continually observing the food will help in maintaining an even temperature, conserve fuel, improve the food's flavor and lessen flare-ups.

- To open the grill lid, slowly lift the handle to avoid burning in case of a grease fire flare-up.
- DO NOT expose any part of your body directly above the cooking area.

Food Preparation Hints

- Your grill can cook a variety of foods. For best results, follow these instructions:
- Trim excess fat from meat and poultry. Slash any remaining fat to stop curling, but take care not to cut the meat.
- Frozen meat and poultry should be thawed prior to cooking.
- Frozen fish and vegetables will cook without thawing.
- Salt food after cooking to help prevent drying out the food.
- Brush naturally lean meats with cooking oil or margarine.
- Cook small pieces of tender foods in foil or on special delicate-food cooking grates (see the section titled "Cooking Methods").
- Apply barbecue, tomato or sugar-based sauces no sooner than the last 10 minutes of cooking.
- Turn food with tongs or a spatula; piercing food (especially meat), tends to dry it out.

In Case of Grease Fire

Follow These Steps

1. Shut off the gas at the burner valve(s) and stay away!
2. Allow the fire to burn itself out.
3. Once the fire is out and the appliance has cooled, remove the disposable cylinder.
4. Clean all parts and inspect for damage. Parts to check for damage are the L.P. cylinder, regulator, burner valve(s) and burner(s).
5. If any of the above mentioned components are damaged, seek replacement from Coleman before operating the grill again. Locate your nearest service center by calling 1-800-835-3278.

Note:

- Some flare-up adds a smoky flavor and sears food. Excessive grease fires can cause a potentially hazardous situation and damage the grill.
- Avoid excessive flare-ups by preheating the grill with the lid closed for 5 minutes on the high setting to burn off grease from previous cooking.
- Cook with the lid down and continually monitor cooking food to avoid grease fires and flare-ups.
- Trimming excess fat from meat will reduce grease fires and flare- ups. Cook fatty meat in smaller amounts over indirect heat on a low setting.
- Be sure to follow the instructions in the section titled "Care, Maintenance, and Cleaning".

Cooking Methods

Direct method:

- The heat source is directly below the food.
- Use for browning meat or cooking hot dogs and hamburgers, but check food frequently.
- Use for skillet and stir-fry cooking, but limit the amount of oil and heat to be used.
- Cook roasts, turkey or duck on low heat. Place meat with water in a foil pan with a corrugated bottom. Replenish water as needed.

Indirect method:

- Light only one side of the burner and place food on the opposite side for cooking.
- Allow food to cook at a lower temperature which increases tenderness and reduces grease flare-ups.
- It is a good method for cooking foods that burn easily (vegetables, fish, etc.).
- Cook casseroles in ovenware or foil pans much like cooking in a conventional oven.
- Also try placing a pan of water above the lit burner side to help meat retain its juices. Replenish the water as needed.

Care, Maintenance and Cleaning

DRIP TRAY

The drip tray is located below the grill and should be cleaned periodically to prevent heavy buildup of debris. (Fig. 33)

Note: Allow the drip tray to cool before attempting to clean.

Important: Do not leave the grill outside during inclement weather unless it is covered (cover sold separately). Rain water can collect inside of the grill, or in the drip tray if left uncovered. If the drip tray is not cleaned after use and the grill is left uncovered, the drip tray will fill with water causing grease and water to spill. We recommend cleaning and storing the drip tray after every use.

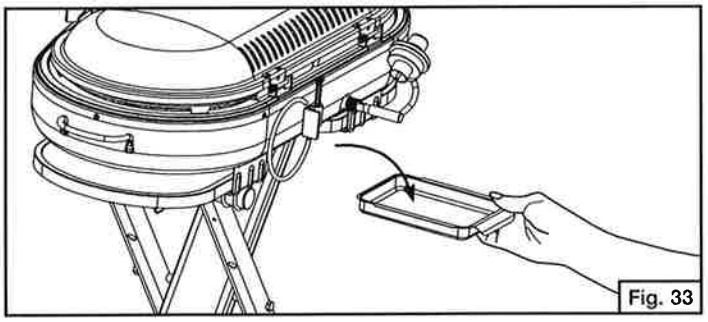
Fig. 33

COOKING GRATES

The cooking grates can be cleaned immediately after cooking is completed and after turning off the grill. Wear a barbecue mitt and scrub the cooking grates with a damp cloth. If the grill is allowed to cool down, cleaning the grates will be easier if removed from the grill and cleaned with a mild detergent.

⚠ CAUTION

All cleaning and maintenance should be done only when the grill is cool & with the fuel supply turned off at the cylinder. Disposable propane cylinders should be detached from the grill during cleaning.

Suggested Cleaning Materials:

- Mild dishwashing liquid detergent • Hot water
- Wire brush • Paper clip • Nylon cleaning pad
- Soft bra`ss-bristled brush • Putty knife • Scraper

Component Cleaning:

- BURNER: Wire-brush loose corrosion from the burner exterior. Clean clogged gas port holes with an opened paper clip. Replace corroded or damaged burners that would emit excess gas.
- COOKING GRATES: Clean cooking grates with mild soap and hot water. Remove stubborn residue with a mild cleanser or scrub brush. DO NOT use a commercial oven cleaner.
- GRILL INTERIOR: Remove grates. Scrape side with tools and remove excess grease and cooking residue.

Cleaning the Venturi

⚠ WARNING

Spider's nests or wasp's mud inside the venturi may cause fire at the valve. If a fire occurs, immediately turn off the gas supply at the control valve (see representative illustration in Fig. 34).

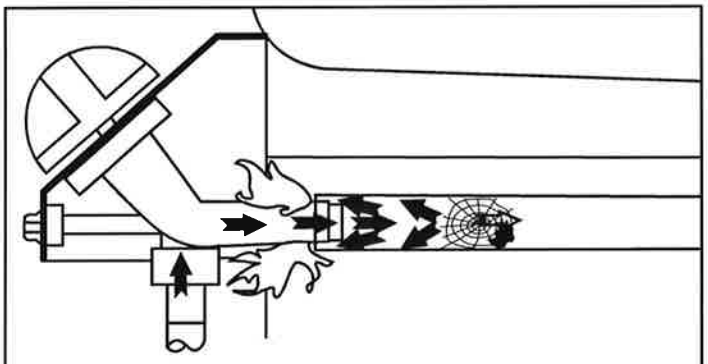

REPRESENTATIVE ILLUSTRATION Fig. 34

Note:

Spiders and small insects can spin webs and build nests inside the venturi tubes. This especially occurs in late summer and fall before frost when spiders are most active. These nests can obstruct gas flow and cause a fire in and around the burner valves. Such a fire can cause operator injury and serious damage to the grill. To help prevent a blockage and ensure full heat output, clean and inspect the venturi tubes often (once or twice a month). NOTE: Water or air pressure will not normally clear a spider web.

Steps For Cleaning Venturi:

1. To remove the above obstructions, use an accessory flexible venturi brush or bend a small hook on one end of a 20-inch long flexible wire such as the one shown in Fig. 35.



Fig. 35

2. Remove the cooking grates set aside. (Fig. 36)

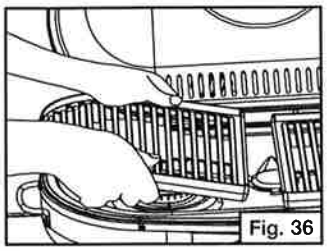

Fig. 36

3. Using a screwdriver, remove the screws holding the cooktop and set aside. (Fig. 37)

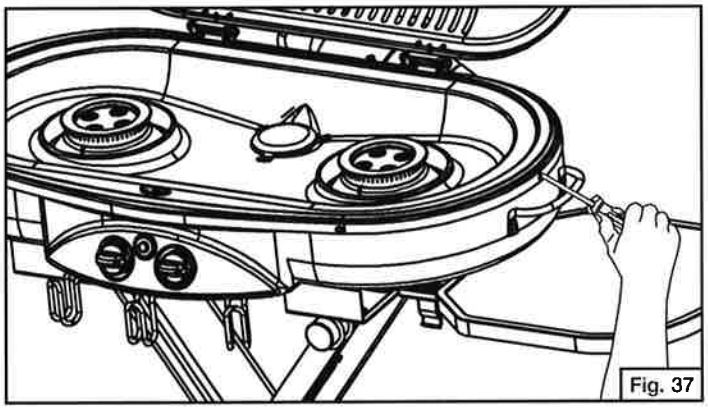

Fig. 37

4. Using a screwdriver, remove the self-tapping screws holding the burner clamps and remove the burners. (Fig. 38)

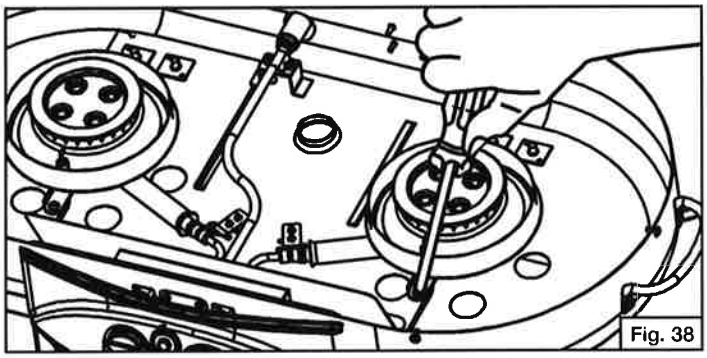

Fig. 38

5. Look inside lower end of venturi tubes for nests, webs or mud. If present, clean as noted in Step 1, Fig. 35.
6. Inspect and clean the burner if needed.
7. Replace the main burners and burner clamps, and position the burners in the operating position.
8. Make sure the orifice fittings are inside the venturi tubes, then tighten all self tapping screws. (Fig. 39)
9. Reinstall the cooktop and the cooking grates.

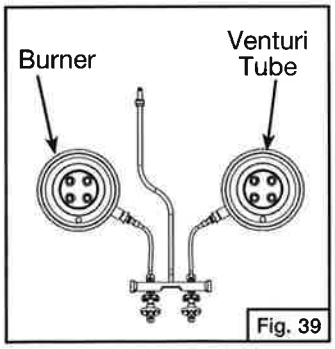

Fig. 39

Moving and Storage

⚠ CAUTION

A collision with the grill, as with any metal object, could cause injury. Use care when moving a portable gas grill.

Moving the grill:

- DO NOT move the grill while it is lit or hot, or with objects on the cooking surface or side tables.
- Clean the grease tray before moving the grill to prevent spills.
- Collapse the grill before moving.
- Move the grill slowly. DO NOT run with the grill behind you; it could hit you from behind causing injury.

After moving the grill:

- Check all gas connections for leaks that could occur from the movement.
- Check the venturi tubes to be sure they are still over the orifices.

Steps to follow before storing grill:

- Clean the grill, including the grease tray.
- Coat the burner lightly with cooking oil to retard rusting.
- For outdoor use only. If the grill is stored indoors, detach the cylinder outdoors. If left outdoors, remove the cylinder and cover the grill for protection from the weather. Grill covers may be purchased from a grill dealer or manufacturer.

Troubleshooting

Problem: Grill will not light when the igniter button is pushed or has incomplete burner flame.

Possible Causes and Solutions:

1. Lack of fuel. Check to see that the cylinder has fuel.
2. Make sure one of the burners is turned on. Allow up to four seconds for gas flow to ignite.
3. f burner lights with match but not igniter, check the ceramic electrode position near the burner, the condition of the igniter wire and its connections. Perform igniter test and replace any damaged parts.
4. Check for spider webs or insect nest in venturi and clean venturi.
5. Check for misalignment of venturi on orifices. Position venturi over orifices.
6. Burner ports, orifices or valves have blockage. Clean the components.
7. Regulator failure; regulator needs to be replaced by an authorized service dealer.
8. Make sure the regulator and cylinder are properly assembled. See the section titled "Installing 1 lb. Propane Cylinders".

Problem: Yellow flame.

Possible Causes and Solutions:

1. Check for spider webs or insect nest in the venturi and clean the venturi.
2. New burner may have residual oil which will burn off.
3. Clean off any food residue, grease or seasoning salts on the burner.
4. The venturi may be misaligned and needs to be lined up over the orifice.

Problem: Flame blows out on low setting or has uneven heat distribution.

Possible Causes and Solutions:

1. Check for spider webs or insect nests in the venturi and clean the venturi.
2. Cold grill needs to be preheated for 5 minutes on high setting.
3. The venturi may be misaligned and needs to be lined up over the orifices.
4. Cold and windy weather will require you to move the grill away from the wind.
5. Lack of fuel. Check to see that the cylinder has fuel.

Problem: Grill too hot.

Possible Causes and Solutions:

1. Excessive flareups which require the maintenance described in the section titled "IN CASE OF GREASE FIRE".
2. A damaged orifice or regulator which requires replacement with factory authorized parts.
3. Buildup of grease inside the grill will require cleaning and emptying the grease tray.
4. Choose a lower cooking temperature if using excessively high settings.

Problem: Fire at any connection.

Possible Causes and Solutions:

IMMEDIATELY shut off control valves and allow grill to cool.

1. Gas is leaking from a faulty connection. Tighten connections with an adjustable wrench and replace damaged parts. Perform a leak test on all connections before cooking on the grill again.

Problem: Flame behind control panel or control knob area.

Possible Causes and Solutions:

IMMEDIATELY shut off control valves and allow grill to cool.

1. Check for spider webs or insect nest in the venturi and clean the venturi.
2. Gas is leaking from a faulty connection. Hand tighten connections and replace damaged parts. Perform a leak test on all connections before cooking on the grill again.
3. The venturi may be misaligned and needs to be lined up over the orifices.

ATTN: DEPT 586

PRODUCT REGISTRATION DEPARTMENT
PO BOX 2931
WICHITA, KS 67219

Please do not send other correspondence to the address below.

Please Place First-Class Stamp Here

PLEASE FOLD AND SEAL WITH TAPE. DO NOT STAPLE.

Coleman® Grill Registration Card

IMPORTANT!

COMPLETE THE ATTACHED REGISTRATION CARD AND RETURN WITHIN 10 DAYS TO RECEIVE THESE IMPORTANT BENEFITS:

▶ **PROTECT YOUR PRODUCT:**
We will keep the model number and date of purchase of your new Coleman® product on file to help you refer to this information in the event of an insurance claim such as fire or theft.

▶ **PROMOTE BETTER PRODUCTS:**
We value your input. Your responses will help us develop products designed to best meet your needs.

CONGRATULATIONS ON YOUR NEW COLEMAN® GRILL PURCHASE!

If you have any questions about your product, please call Coleman customer service at 1-800-356-3612.
For easier/faster registration, please go to the product registration section of our Coleman Web site at www.coleman.com.

❶ 1. ☐ Mr. 2. ☐ Mrs. 3. ☐ Ms. 4. ☐ Miss.

First Name: _____ Initial: ___ Last Name: _____

Address (Number and Street): _____ Apt #: _____

City: _____ State: ___ Zip: _____

Phone #: ___ ___ ___

❷ Date of Purchase: ___ (Month) ___ (Day) ___ (Year)

❸ Purchase Price: $___.00 (Excluding Tax)
1. ☐ Regular Price 2. ☐ Sale Price 3. ☐ Don't Know

❹ Store where purchased: _____

❺ Product Model Number: _____

❻ Can Coleman contact you with promotional information or updates about Coleman® products?
1. ☐ Yes, Please contact me. 2. ☐ No, Thanks

❼ E-mail Address: _____

The following questions are not required to register your product, but will greatly assist us in understanding your needs and building better performing products.

❽ Which factors most influenced your purchase? (Please check all that apply.)
1) ☐ Received as a gift
2) ☐ Brand
3) ☐ Price
4) ☐ Style
5) ☐ Recommendation from Store Salesperson
6) ☐ Recommendation from Friend
7) ☐ Television
8) ☐ Magazine
9) ☐ In Store Display/Sign
10) ☐ Packaging
11) ☐ Size
12) ☐ Weight
13) ☐ Ease of Use
14) ☐ Other Features
15) ☐ Other

❾ Which of these best describes this purchase? (Please check all that apply.)
1) ☐ Received as a gift
2) ☐ First of this type of product owned
3) ☐ Addition to Coleman® products
4) ☐ Replaced old Coleman® product
5) ☐ Replaced another brand product
6) ☐ Purchase in addition to another brand

❿ Do you participate in any of the following activities? (Please check all that apply.)
1) ☐ Tent Camping
2) ☐ RV Camping
3) ☐ Hiking/Backpacking
4) ☐ Fishing
5) ☐ Boating
6) ☐ Going to the Beach
7) ☐ Tailgating
8) ☐ Picnicking
9) ☐ Hunting
10) ☐ Barbequing
11) ☐ Rock Climbing
12) ☐ Bicycling
13) ☐ Leisure Walking
14) ☐ Canoeing
15) ☐ Kayaking
16) ☐ Entertaining
17) ☐ Backyard Entertaining
18) ☐ Attend Auto Racing

⓫ What other brands did you consider?: _____

⓬ Date of Your Birth: ___ (Month) ___ (Day) ___ (Year)

⓭ For your primary residence, do you:
1. ☐ Own 2. ☐ Rent

⓮ Education: (Check only one.)
1) ☐ High school diploma
2) ☐ Some college
3) ☐ College degree
4) ☐ Some graduate school
5) ☐ Graduate degree

⓯ Marital Status:
1. ☐ Single 2. ☐ Married

⓰ Number of people in household: _____

⓱ Number of kids in household under 18 years of age: ____

⓲ Which best describes your family income?
1) ☐ Under $15,000
2) ☐ $15,000 - $24,999
3) ☐ $25,000 - $34,999
4) ☐ $35,000 - $49,999
5) ☐ $50,000 - $74,999
6) ☐ $75,000 - $99,999
7) ☐ $100,000 - $149,999
8) ☐ Over $150,000

⓳ What grill feature influenced the purchase of your Coleman® grill? (Please check all that apply.)
1) ☐ Amount of BTU's for cooking
2) ☐ Cart design
3) ☐ Flame control cooking system
4) ☐ Power burner
5) ☐ Stainless steel material (if applies)
6) ☐ Porcelain or stainless steel cooking grates
7) ☐ Side burner (if applies)
8) ☐ Steamer/Fryer/Warmer (if applies)
9) ☐ Side table design
10) ☐ Color of the grill (not including stainless steel)
11) ☐ Warming racks
12) ☐ Dependable igniter
13) ☐ Size of the grill (available cooking square inches)
14) ☐ Integrated storage cabinet
15) ☐ Price
16) ☐ Rotisserie (if applies)
17) ☐ Other

Thank you for filling out this questionnaire. Your answers are important to us. Please check here [ ] if you prefer not to learn more about Coleman® Outdoor Cooking Products or obtain information on new interesting opportunities from other companies.