LIFETIME®

www.lifetime.com

****For U.S. and Canada Customers ONLY:****

IF ASSISTANCE IS NEEDED,

DO NOT CONTACT THE STORE!!!

CALL OUR CUSTOMER SERVICE DEPARTMENT at **1 (800) 225-3865**

HOURS: 7:00 a.m. to 5:00 p.m. Monday through Friday (Mountain Standard Time)
Call, or visit our Website for Saturday hours.

Customers outside the U.S. or Canada, please contact the store.

COMPETITION SERIES POWERLIFT® BASKETBALL SYSTEM

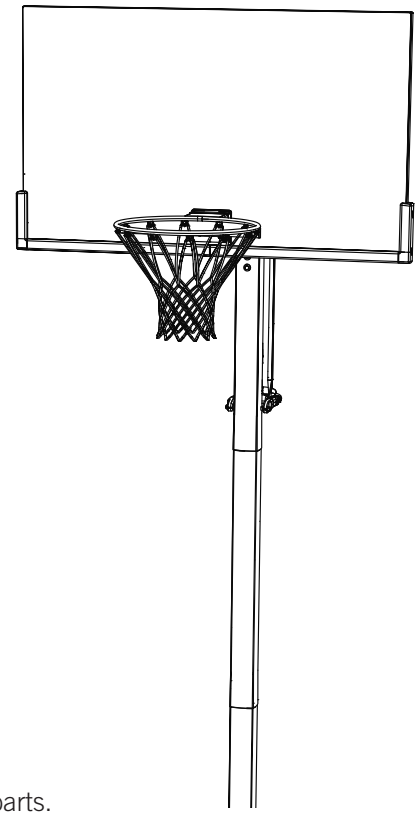

MODEL #78888

⚠ WARNING ⚠

Failure to comply with any of the warnings in these instructions may result in serious personal injuries such as cuts, broken bones, nerve damage, paralysis, brain injury, or death. Failure to comply may also result in property damage. Please heed all warnings and cautions. To ensure your safety, do not attempt to assemble this system without reading and following all instructions carefully. Identify and inventory the parts using the Parts List.

ASSEMBLY INSTRUCTIONS AND OWNER'S MANUAL

****A MINIMUM OF THREE ADULTS ARE REQUIRED FOR ASSEMBLY****

Save this instruction in the event that the manufacturer has to be contacted for replacement parts.

PARTS LIST

ID	Part #	Description	Qty	✓
TP	1030848	Top Pole	1	☐
MP	1030673	Middle Pole	1	☐
BP	1030672	Bottom Pole	1	☐
PA	HA01800	Gas Spring	1	☐
PB	825619	Rim	1	☐
PC	1030838	Upper Strut Arm	2	☐
PD	1030868	Rigid Arm Assembly	2	☐
PF	1030758	Rear Lifter Arm	2	☐
PG	1105023	Gas Spring Cover	1	☐
PH	1030864	Backboard	1	☐
PI	502027H	Handle	1	☐
PJ	502049G	Trigger	1	☐
	FS16500	Warning Sticker (Applied)	1	☐
PK	604091	Height Adjust Sticker	1	☐
PM	CF01700	Pole Cap	1	☐
PN	DD00800	Net	1	☐
PO	502056	Plastic Guard	1	☐
PQ	1030847	Spring Bracket	1	☐
PR	1021852	Rim Cover Plate	1	☐
PT	700674	Alignment Frame	1	☐
PU	1030839	Rigid Arm Tie Plate	1	☐
PV	ZA02600	U-Bolt Washer Plate	1	☐
AV	1006069	Corner Frame Pad	2	☐
AW	1023660	Bottom Frame Pad	1	☐
RI	804018	Pivot Bracket	1	☐
RJ	804033	Spring Retainer Plate	1	☐
Handle Hardware (1017923)				
HA	302007	3/8" x 6 1/2" Hex Bolt	2	☐
HB	300101	Release Pin	1	☐
HC	302008	3/8" Centerlock Nut	2	☐
HD	300187	1/2" x 6 1/2" Hex Bolt	1	☐
MG	301008	1/2" Centerlock Nut	1	☐
Rim Hardware (1001327)				
RA	BS01000	#7 x 3/8" Screw	4	☐
RB	300104	3/8" Push Nut	2	☐
RC	1161928	5/16" x 1" Carriage Bolt	2	☐
RD	300128	5/16" Jam Nut	2	☐
RE	302084	4" U-Bolt	1	☐
RF	302090	5/16" Nylock Flange Nut	4	☐
RG	1001137	Compression Spring	2	☐
RH	510038	3/8" x 5 1/2" Axle	1	☐
Frame Pad Hardware (HH00700)				
FA	BS00100	#10 x 3/4" Self-Drilling Screw	10	☐

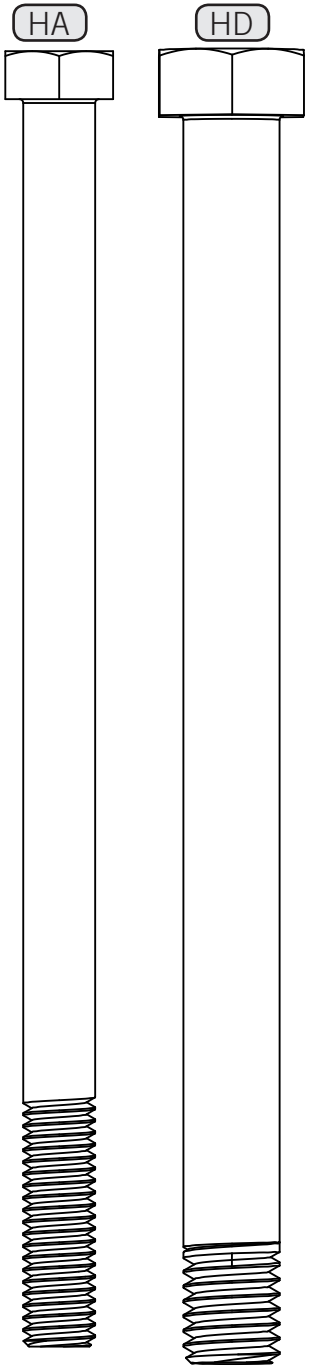

HARDWARE IS ACTUAL SIZE

(Unless otherwise indicated)

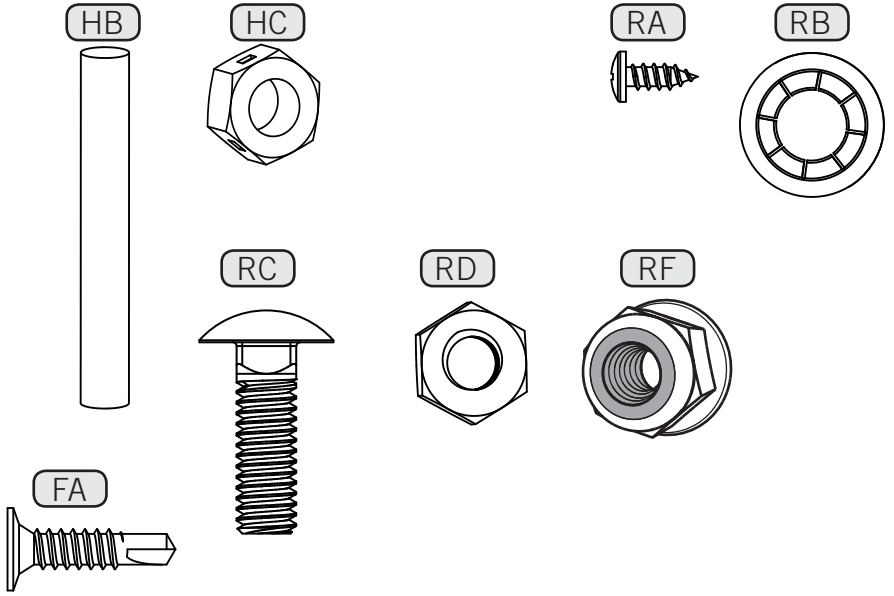

TOOLS AND MATERIALS REQUIRED FOR ASSEMBLY

(Not Included)

1.	Adjustable Wrench	11.	Water Supply
2.	Hammer or Mallet	12.	Concrete Mix
3.	1/2" Wrenches (2)		(at least six 90-lb. bags)
4.	9/16" Wrenches (2)	13.	Pencil or Marker
5.	3/4" Wrenches (2)	14.	Scissors or Wire Cutters
6.	11/16" Wrench	15.	Carpenter's Level
7.	Tape Measure	16.	30" Rebar
8.	Electric Drill	17.	Ladders (3)
9.	Pliers	18.	Phillips Screwdriver
10.	Shovel	19.	1/2" Socket Wrench

PARTS LIST

ID	Part #	Description	Qty	✓
Main Hardware (HH00800F)				
MA	300029	1/2" x 7 1/8" Hex Bolt	2	☐
MB	300040	1/2" Nylon Washer	8	☐
MC	300031	3/8" Flat Washer	2	☐
MD	B020010	5/16" x 2 1/2" Hex Bolt	1	☐
ME	302076	5/16" Centerlock Nut	1	☐
MF	300095	5/16" Cap Nut	2	☐
MG	301008	1/2" Centerlock Nut	5	☐
MH	301051	3/8" x 5" Hex Bolt	2	☐
MI	300073	1/2" Flat Washer	8	☐
MJ	BN00100	1/2" x 1 3/4" Nut Coupler	1	☐
MK	BB00200	5/16" x 3/4" Thread-Cutting Bolt	2	☐
ML	BB00500	1/2" x 1 3/4" Hex Bolt	2	☐
HS	302008	3/8" Nylock Nut	2	☐
MN	500041	3/8" x 1/4" Spacer	2	☐
MQ	500081	Grease Packet	1	☐
MS	500114	Finish Plug Cap	2	☐
MR	800264	.510" x 3.91" Spacer	2	☐
MT	800328	3/4" x 4 1/5" Spacer	1	☐
MU	500105	1/2" Nylon Plug	4	☐
MV	BB00700	1/2" x 5" Hex Bolt	1	☐
MX	500038	1/2" x 3/8" Spacer	2	☐
MW	BB00800	1/2" x 3" Bolt w/ Nylon patch	2	☐
Pole Joint Hardware (HD9081)				
SS	300017	#10 x 5/8" Self-Drilling Screw	2	☐

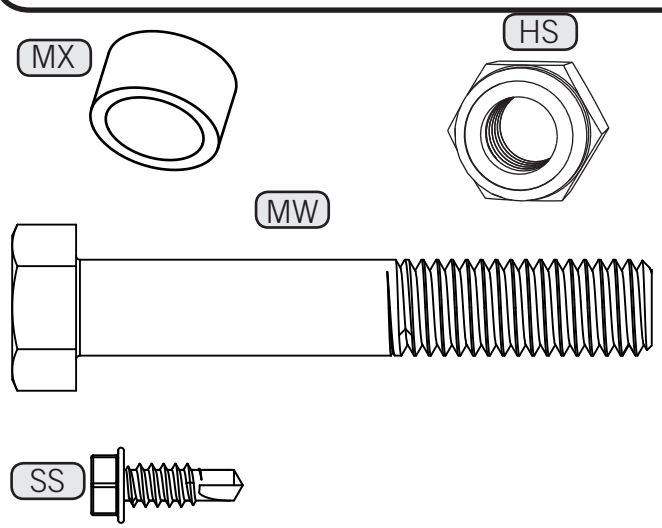

HARDWARE IS ACTUAL SIZE

(Unless otherwise indicated)

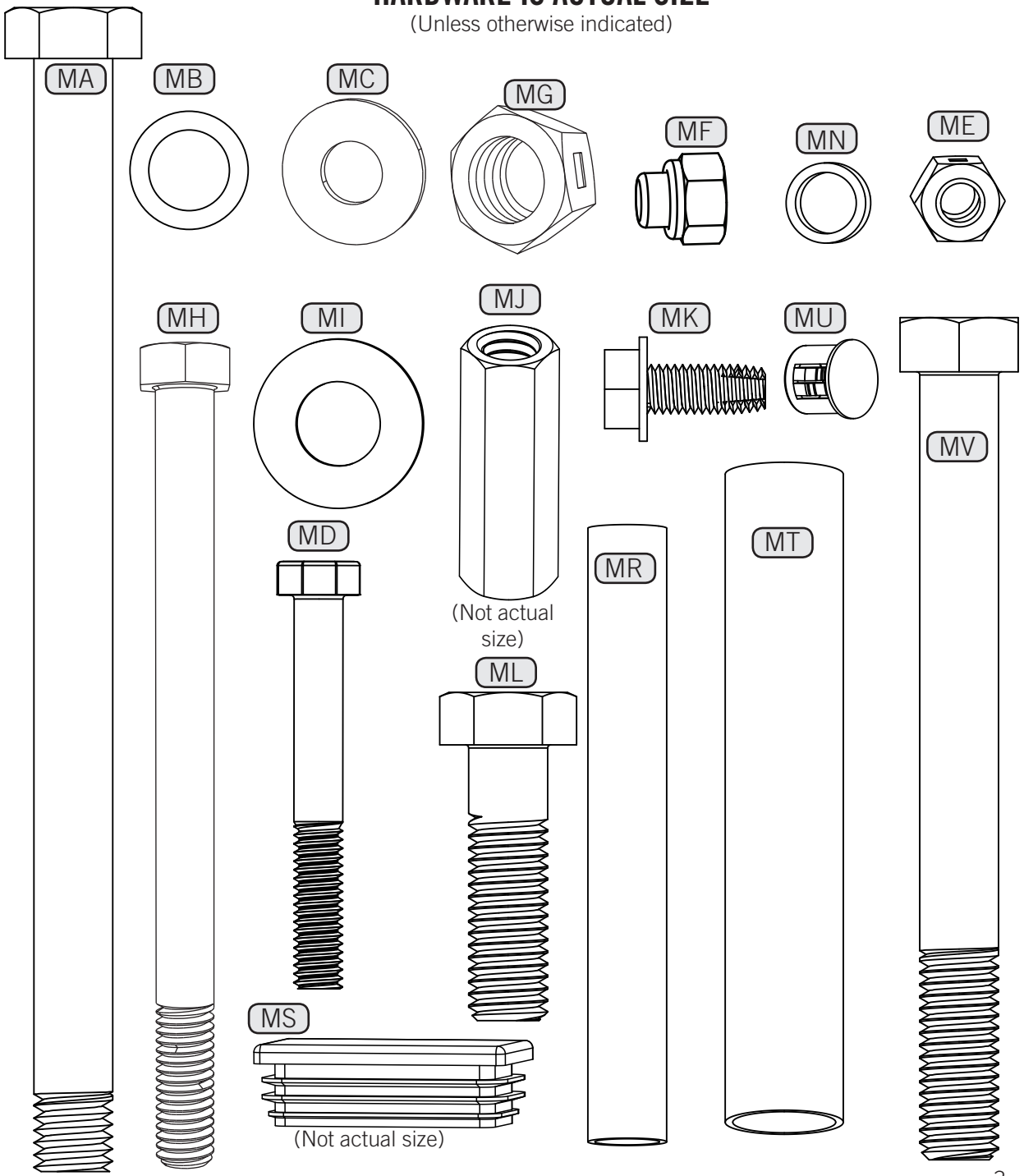

BEFORE BEGINNING ASSEMBLY

A. Identify and inventory all parts using the checklist boxes on the Parts List. Keep the hardware bags and their contents separate. If any parts are missing, call our Customer Service Department.
B. Test fit all Bolts by inserting them into their respective holes. If necessary, carefully scrape away any excess powder coating buildup from inside the holes. Do not scrape away all of the powder coating. Bare metal may rust. You may need to pound the Bolts into place with a hammer or mallet.
C. Purchase six 90-lb bags of concrete ready-mix and a 30" length of rebar. Choose the location of your pole carefully! Avoid putting the pole near overhead power or utility lines. When digging, consider the location of any underground utilities.

POLE SECTION IDENTIFICATION

Identify the pole sections before beginning assembly. Failure to assemble the pole sections correctly may result in severe personal injury or property damage as described on Page One.

ONCE THE POLE SECTIONS HAVE BEEN SEATED, THEY CANNOT BE SEPARATED.

Note: Tapers and flares are exaggerated in the illustrations.

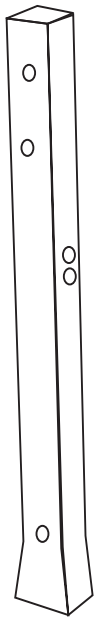

Top Pole: Four holes at the top of the pole, four holes in the middle and two holes at the bottom.

TP

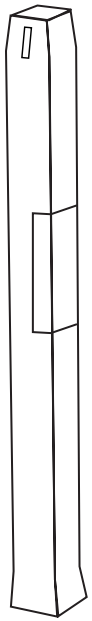

Middle Pole: Slots at the top of the pole. Warning Sticker.

MP



Bottom Pole: Slots at the top of the pole, two dimples at the bottom.

BP

SAFETY INSTRUCTIONS

FAILURE TO FOLLOW THESE WARNINGS MAY RESULT IN SERIOUS INJURY OR PROPERTY DAMAGE AND WILL VOID WARRANTY.

Owner must ensure that all players know and follow these rules for safe operation of the system.

To ensure safety, do not attempt to assemble this system without following the instructions carefully. Check entire box and inside all packing material for parts and/or additional instruction material. Before beginning assembly, read the instructions and identify parts using the hardware identifier and parts list in this document. Proper and complete assembly, use and supervision are essential for proper orientation and to reduce the risk of accident or injury. A high probability of serious injury exists if this system is not installed, maintained, and operated properly.

- If using a ladder during assembly, use extreme caution.
- Two capable adults are recommended for this operation.
- Before digging, contact utility company to locate underground power cables, gas, and water lines. Ensure that there are no overhead power lines within 20 ft. (7m) radius of pole location.
- Minimum operational height is 7'6" (2.23m) to the rim.

Most injuries are caused by misuse and/or not following instructions. Use caution when using this system.

Register your product online at www.lifetime.com.

At Lifetime, we are committed to providing innovative and quality products. While registering, you will have the opportunity to give us your feedback. Your input is valuable to us.

You can also opt in to receive new product notifications or promotions.

In the unlikely event of a product recall or safety modification, your registration provides the information we need to notify you directly.

Registration is fast, easy, and completely voluntary.

Maintaining your privacy is our long-standing policy at Lifetime. And you can rest assured that Lifetime will not sell or provide your personal data to other third parties, or allow them to use your personal data for their own purposes.

We invite you to read our privacy policy at www.lifetime.com

REGISTER today!

Required For This Page:
Shovel
Concrete
Tape Measure
Pencil/Marker
Level

1

A Ground Sleeve is available as an alternative to cementing the pole into the ground. Please contact our Customer Service Department for more information.

Dig a hole 24” deep and 21” in diameter. The edge of the hole should be flush with the edge of the playing surface. If you live in an area where frost heaves may pose a problem, consult your local building inspector to determine the proper hole depth.

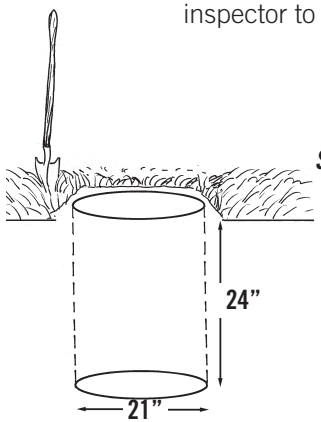

Mix 5 1/2 bags of concrete.

Save 1/2 bag of concrete mix to use later in the assembly.

Pour the mixed concrete into the hole until it is filled to the level of the playing surface.

2

Make a mark 16 inches from the dimpled end of the Bottom Pole (BP) (do not scratch the powder coating).

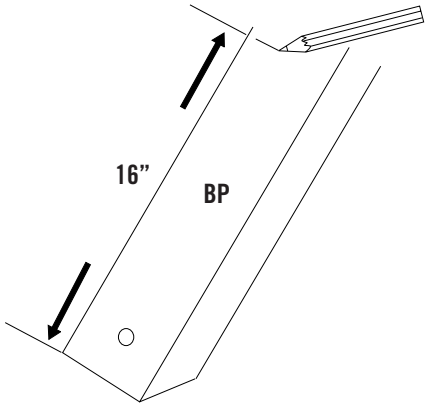

3

Slide the Alignment Frame (PT) over the Bottom Pole (BP).

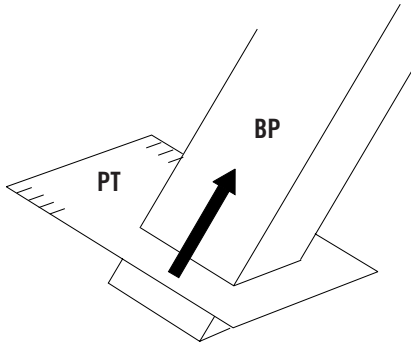

4

Slide the dimpled end of the Bottom Pole (BP) into the cement up to the 16-inch mark.

Position the pole next to the playing surface. For regulation courts, the Alignment Frame (PT) should cross the playing surface at the middle of the scored measurements.

Use a level to make sure the pole is standing vertical.

Form the cement into a downward slope away from the pole to allow water runoff. ***Failure to do so may result in premature rusting of the pole.***

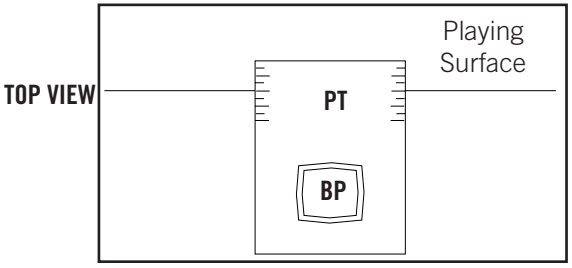

SIDE VIEW

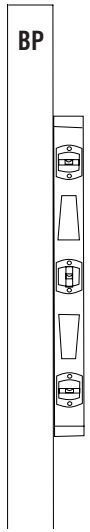

5

Insert the 30” rebar (not included) inside the Bottom Pole (BP) so it is about 15” from the top of the pole.

Check the pole several times within the first hour to make sure that all sides are vertical and that the 16-inch mark remains level with the surface.

Allow 1-4 hours for the concrete to set.

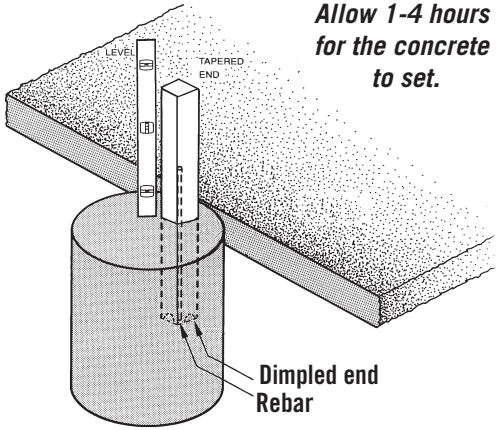

6

Mix the remaining 1/2 bag of concrete. Fill the Bottom Pole with concrete until it reaches the top of the rebar (about 15” from the top of the pole).

Tamp the concrete down in the Bottom Pole with a broom handle to remove air pockets. Clean all concrete off the outside of the pole.

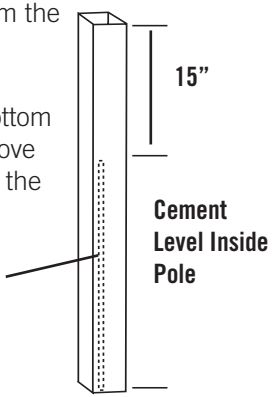

You may now remove the Alignment Frame.

Allow the concrete to set for at least 72 hours before installing the rest of the system onto the Bottom Pole.

STOP!

The concrete must cure for **at least 72 hours (3 days)** before installing the rest of the system. In humid climates or wet weather, allow additional time for the concrete to cure. Do not proceed until the curing process is complete.

Required For This Page:

9/16" Wrenches



Electric Drill HH00800F

Pencil/Marker

Tape Measure

MH (2)

MR (2)

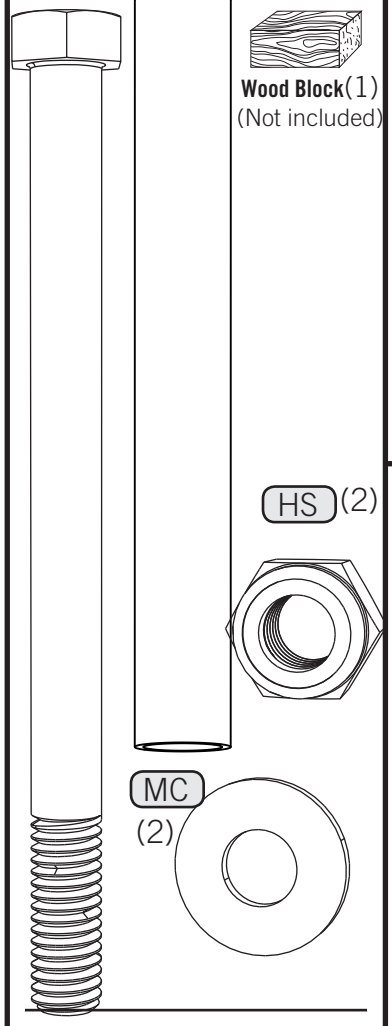

Wood Block (1) (Not included)

HS (2)

MC (2)

HD9081

SS (1)

7

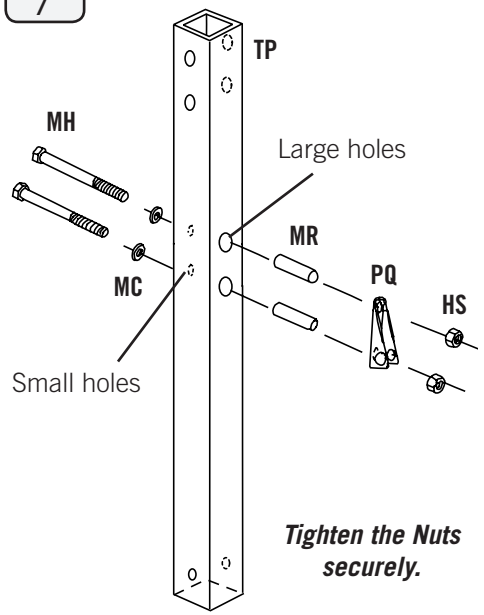

Tighten the Nuts securely.

8

Make a mark 5 inches from the top of the Middle Pole (MP).

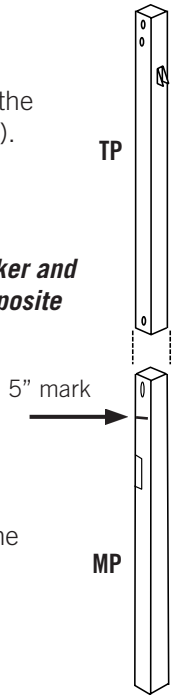

Make sure the Warning Sticker and the Spring Bracket face opposite directions.

Slide the Top Pole over the Middle Pole.

9

Hold the pole sections up so the Top Pole (TP) is on the bottom. Strike the poles firmly on the Wood Block five to six times.

Do not hit your feet with the pole, as serious injury could occur.

If your pole sections do not reach within 1/2 inch of the 5-inch mark after seating, DO NOT COMPLETE ASSEMBLY. Call our Customer Service Department for assistance.

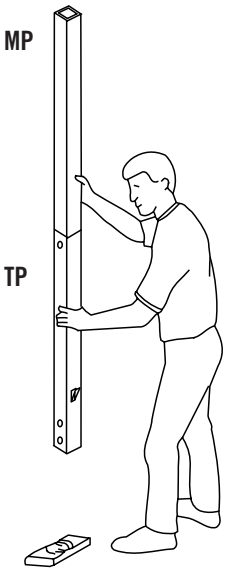

⚠ WARNING

The poles must be seated together. Even if they reach the 5-inch mark before seating, you must strike them on the wood five to six times! Failure to seat the poles correctly could allow the poles to separate during use, which could lead to property damage or serious personal injuries such as those listed on Page One.

10

The pole joint safety Screws do not replace proper pole seating--both are required.

Measure up one inch from the pole joint on the same side of the pole as the Bracket and begin inserting one of the Screws (SS). Once the Screw has entered the pole, slow the drill down to avoid stripping the Screw.

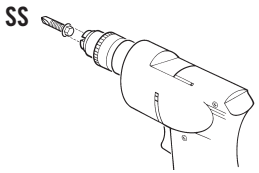

Always wear safety glasses when operating power tools.

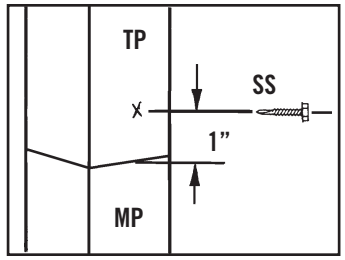

⚠ WARNING ⚠

You must follow all instructions for pole joint safety Screw attachment and pole seating. Failure to do so could allow the poles to separate, resulting in property damage or serious personal injuries such as those listed on Page One.

Required For This Page:

3/4" Wrenches

9/16" Wrenches

Scissors or Wire Cutters

Pliers

1017923

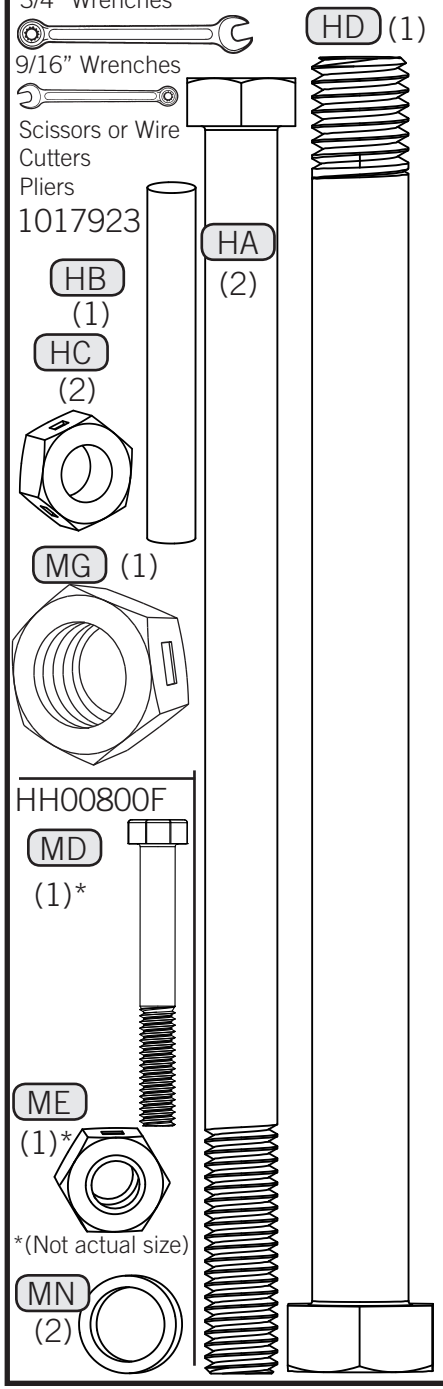

11

Slide the **Gas Spring Cover (PG)** onto the **Gas Spring (PA)** as shown.

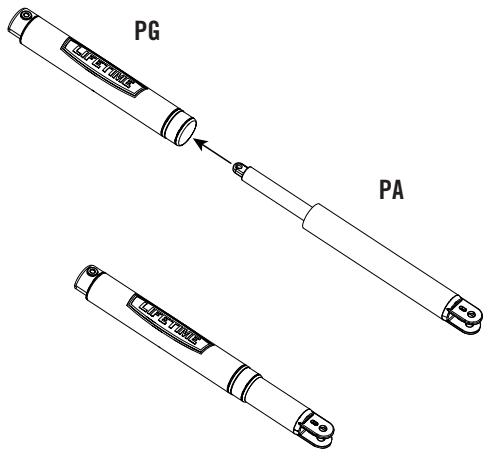

12

Line up the Rear Lifter Arms (PF) with the Gas Spring (PA).

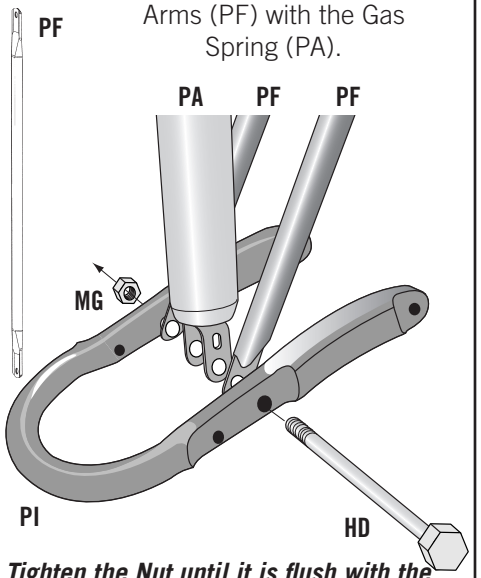

Tighten the Nut until it is flush with the Bolt.

13

Align the holes in the **Gas Spring Cover (PG)** and the **Gas Spring (PA)** with the holes in the **Pole Bracket (PQ)**, and attach the Gas Spring assembly to the Pole Bracket with the hardware shown.

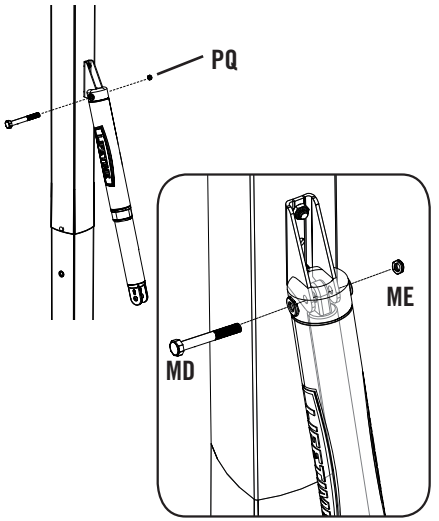

14

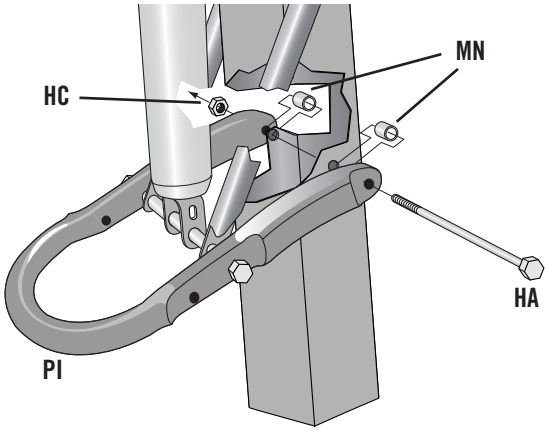

Tighten the Nut until it is flush with the Bolt.

15

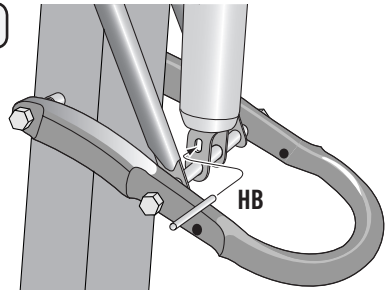

16

The Release Pin (HB) should fit into the channels in the Trigger (PJ).

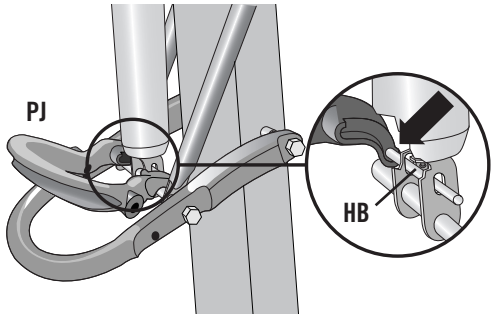

17

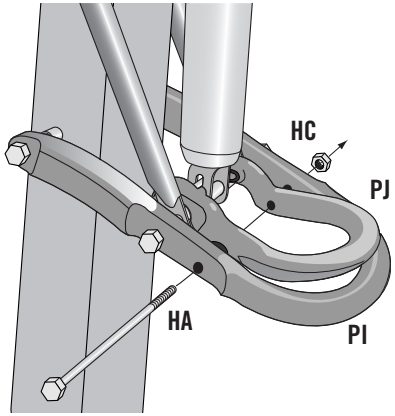

Tighten the Nut until it is flush with the Bolt.

Required For This Page:

1/2" Wrenches



1/2" Socket Wrench

1001327

RF (2)

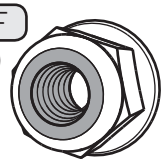

RC (2)

RB (2)

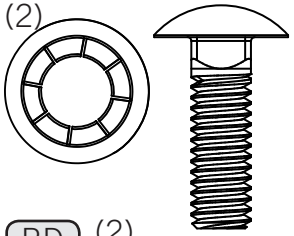

RD (2)

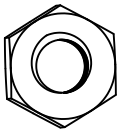

18

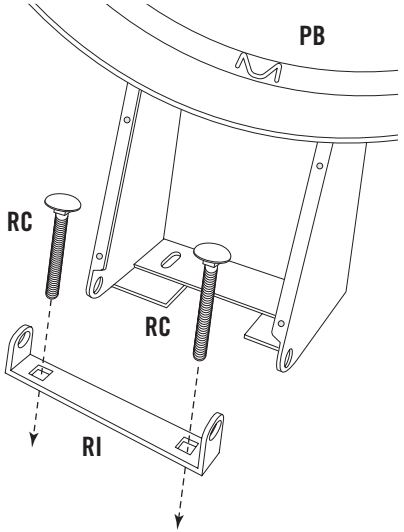

19

Use the 1/2" socket head from the socket head wrench to press one Push Nut (RB) onto one end of the Axle (RH).

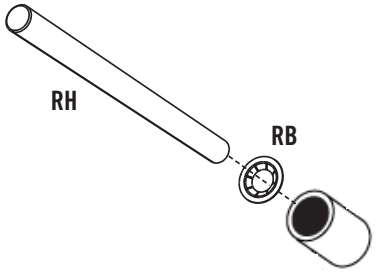

Note: The Push Nut should rest about 1/4" from the end of the Axle. If the Push Nut slips on too far, continue sliding it to the other end of the Axle to remove it and try again.

19B

Slide the end of the Axle (RH) through the Rim (AO) and the Rim Pivot Bracket (RI). Press the Push Nut (RB) onto the end of the Axle. U se the 1/2" socket head to secure the Push Nut if needed.

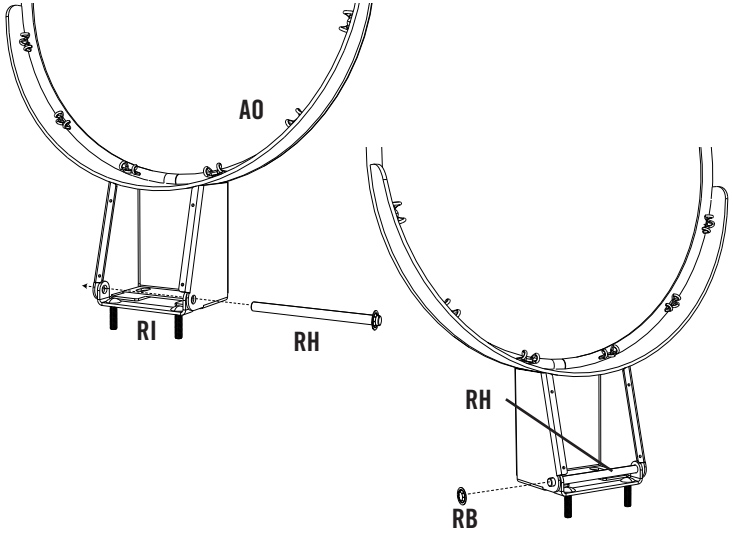

20

Lay the Backboard (PH) face up with the Rim holes exposed over the edge of a table.

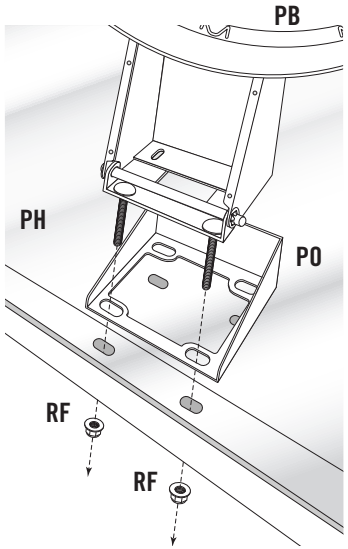

21

Insert the U-Bolt (RE) through the U-Bolt Washer Plate (PV) and the upper holes in the back of the Backboard.

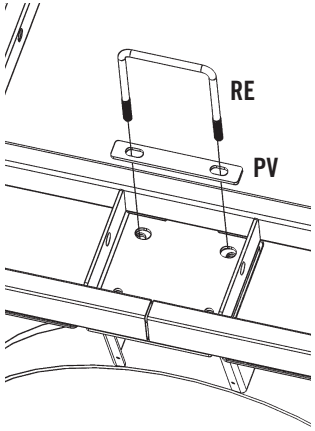

22

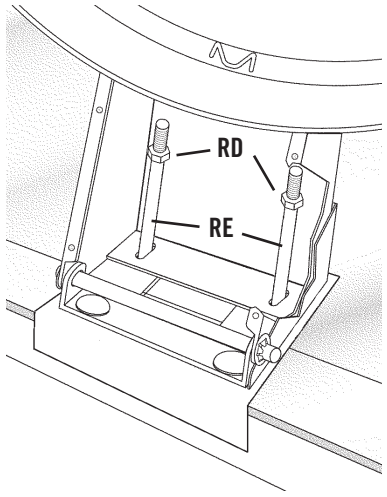

Tighten the Jam Nuts (RD) onto the U-Bolt (RE) as far as they will go.

23

Slide the Compression Springs (RG) onto the U-Bolt (RE).

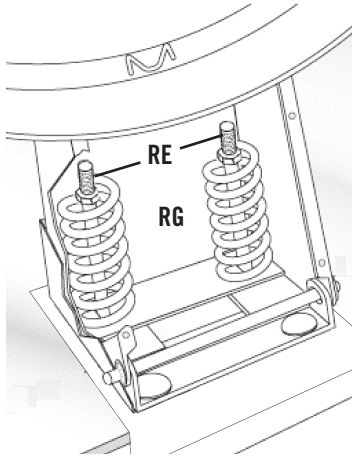

Required For This Page:

1/2" Wrenches



1/2" Socket Wrench

Screwdriver

Electric Drill

Hammer/ Mallet

1001327

RF (2)

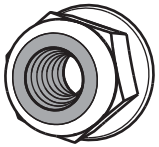

RA (4)



HH00800F

MK (2)

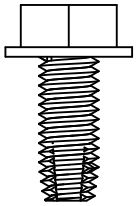

MF (2)

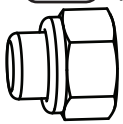

HH00700

FA (10)

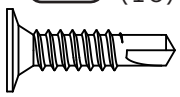

24

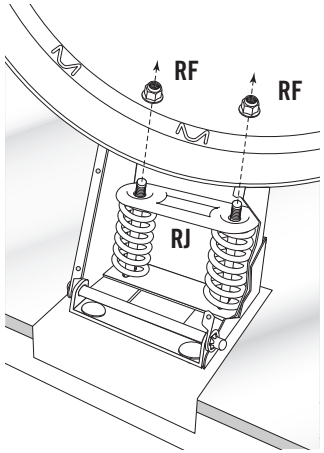

Tighten the Nylock Flange Nuts (RF) **until the Rim is level.**

25

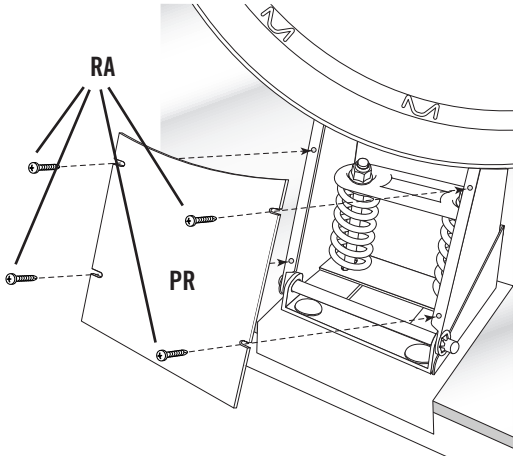

26

Remove the plastic film from the Backboard. The lip of the Frame Pad overlaps the front of the Backboard.

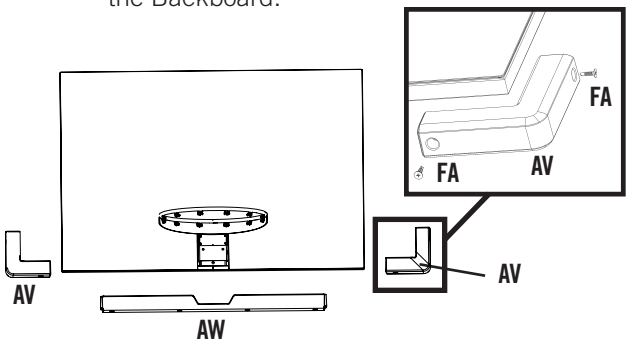

Use an electric drill to insert the Screws.

Attach the Center Frame Pad (AW) first. Align the small line in the back of the Center Frame Pad with the seam in the Backboard frame.

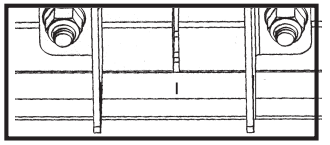

27

Insert the Rigid Arm Tie Plate (PU) into the slots in each Rigid Arm Assembly (PD).

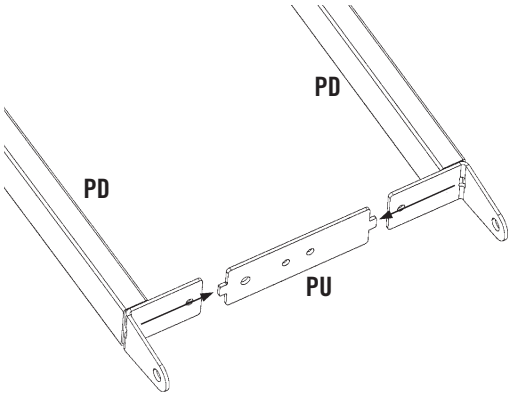

You may need to tap the Plate into the Rigid Arms with a hammer or mallet.

28

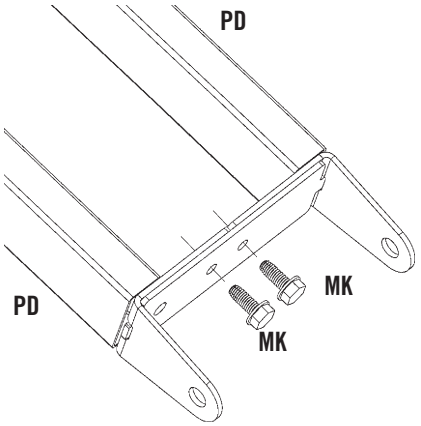

Use a 1/2" socket wrench to screw the Thread-Cutting Bolts (MK) into the holes in the Rigid Arms and Tie Plate.

29

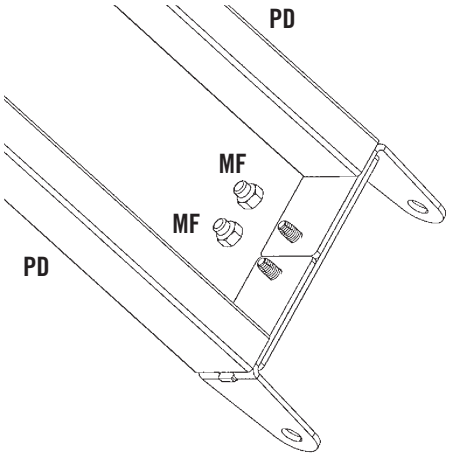

WARNING

Do not overtighten the Cap Nut. If the end of the Bolt breaks through the plastic cap, call our Customer Service Department at the number on Page One. Exposed threads on the end of the Bolt may cause serious injuries such as those listed on Page One.

Required For This Page:
3/4" Wrenches



HH00800F

MA (2)

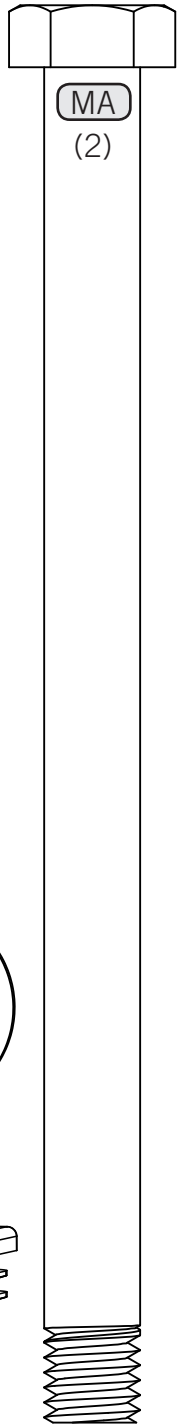

MT (1)

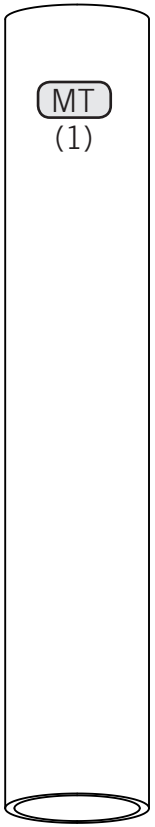

MG (2)

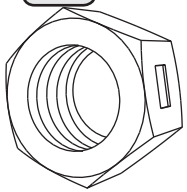

MB (2)

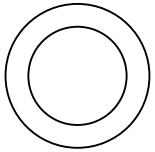

MI (4)

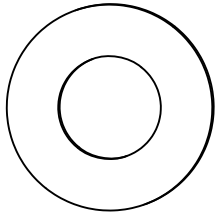

MS (2)

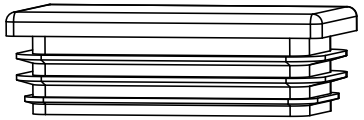

(Not actual size)

30

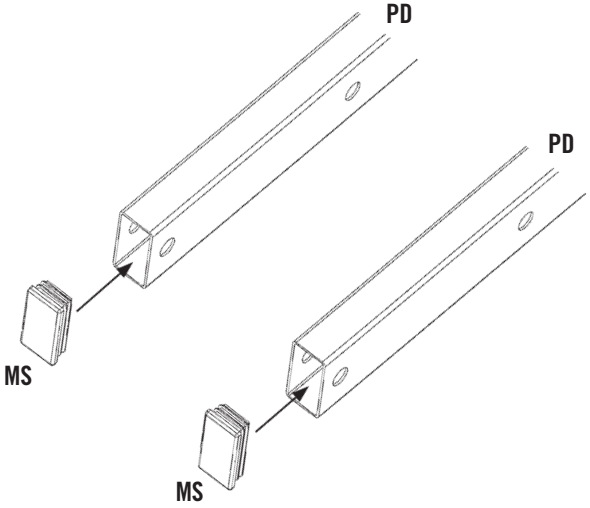

31

****Two Adults Required for The Following Steps****

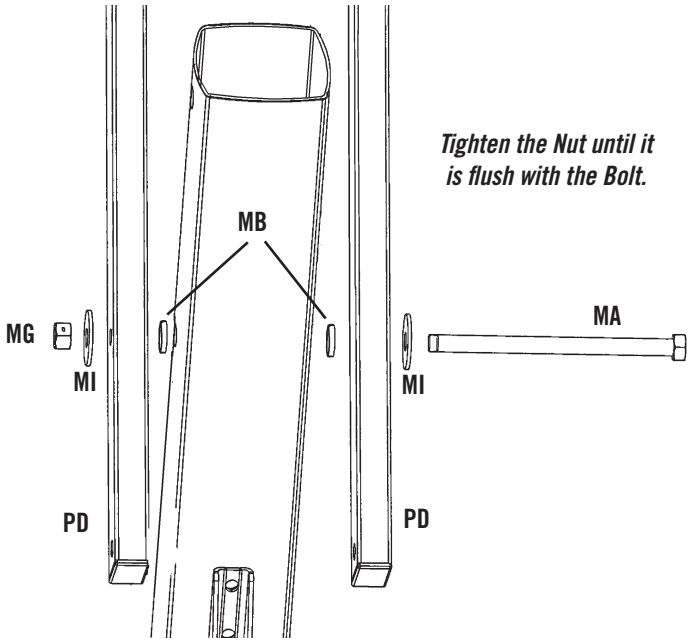

32

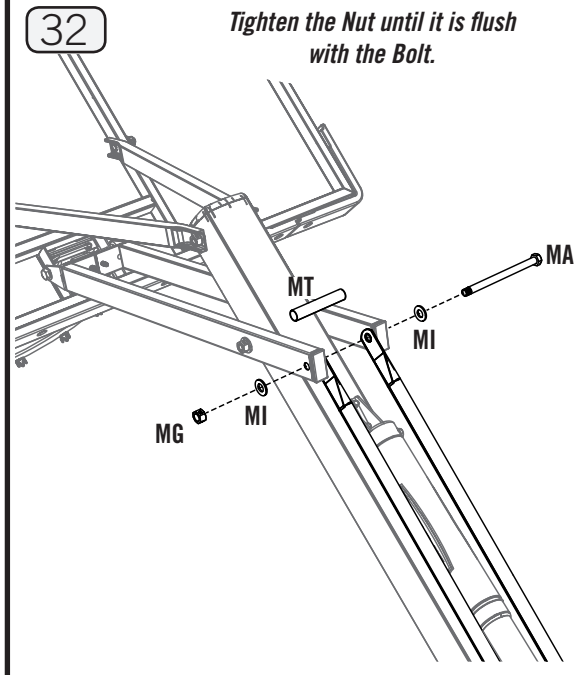

33

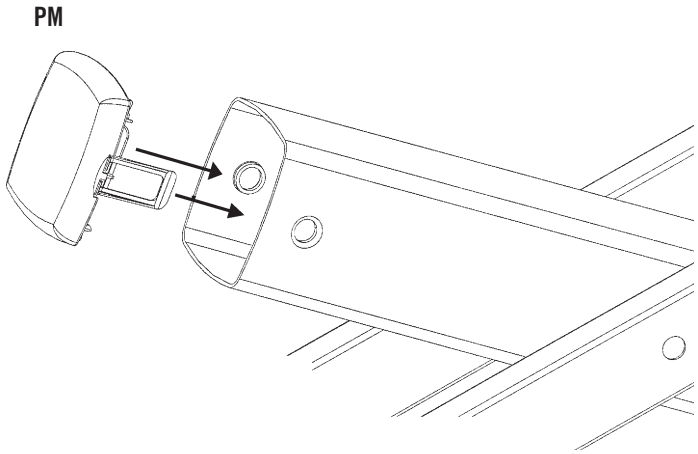

Bend the tabs on the Pole Cap (PM) down and insert it into the pole so the tabs line up with the holes.

Required For This Page:

3/4" Wrenches

11/16" Wrench

HH00800F

MG (1)

MI (2)

MJ (1)

(Not actual size)

MV (1)

MB (4)

MW (2)

MX (2)

34

Make sure the Bolt (MV) goes through the tabs in the Pole Cap.

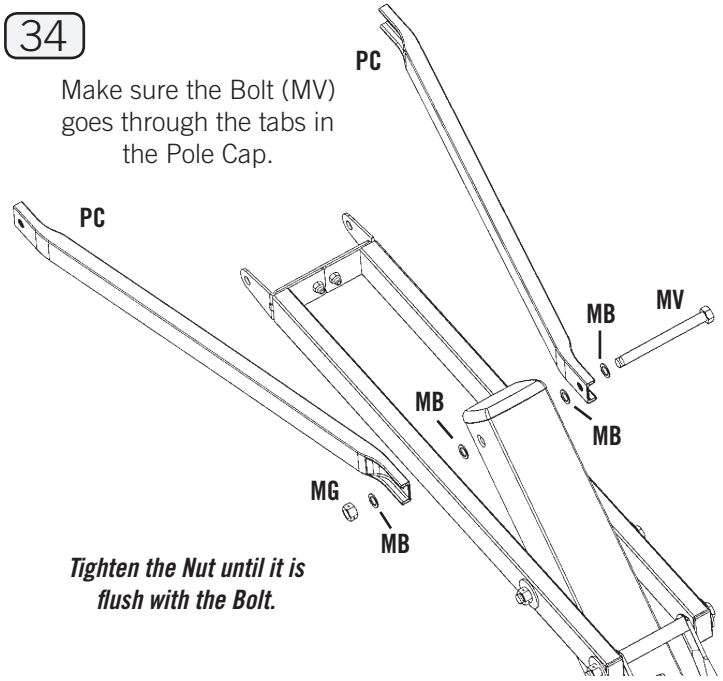

Tighten the Nut until it is flush with the Bolt.

35

Lay the Backboard on the ground on a piece of cardboard to prevent scratches. Lift the lower arms (PD) up to the Backboard. Insert each 1/2" x 3" Hex Bolt (MW)(with the Nylon patch) through a 1/2" Flat Washer (MI), the Rigid Arm, a 1/2" x 3/8" Spacer (MX) and the Backboard.

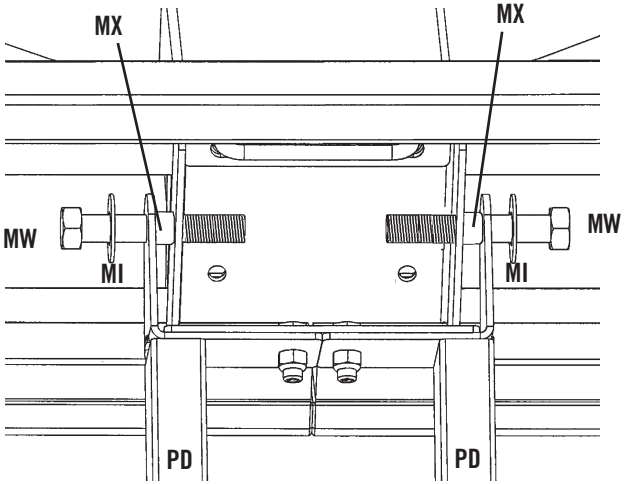

36

Use wrenches to screw the Nut Coupler (MJ) onto one of the Bolts (MW). Do not screw the Coupler all the way on to the Bolt.

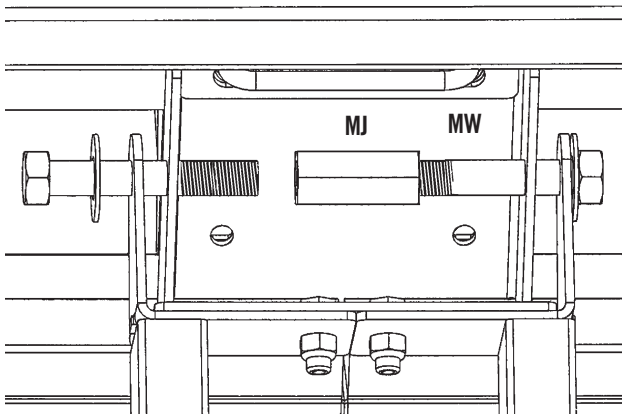

37

Screw the other Bolt (MW) into the Coupler. Make sure the Coupler is centered between the Bolts. Hold the Coupler with the 11/16" wrench while tightening the Bolts.

Make sure the Spacers (MX) between the Arms and the Backboard don't bulge.

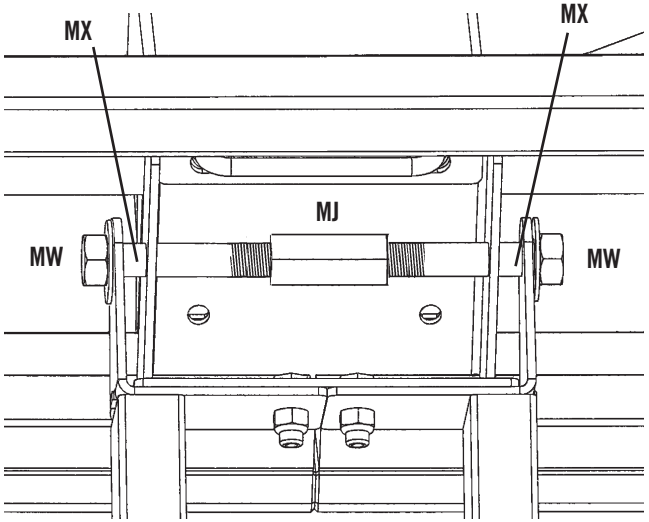

Required For This Page:
Wood Block
3/4" Wrenches
HH00800F

MG (2)

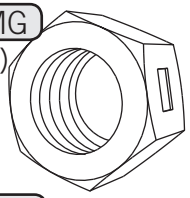

MU (4)

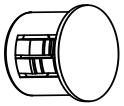

MI (2)

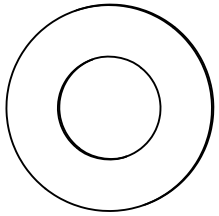

MB (2)

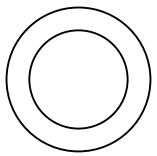

ML (2)

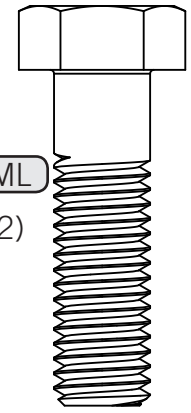

38

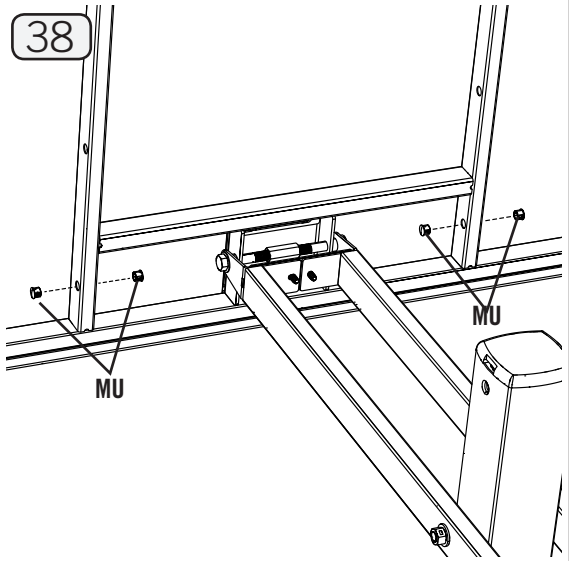

39

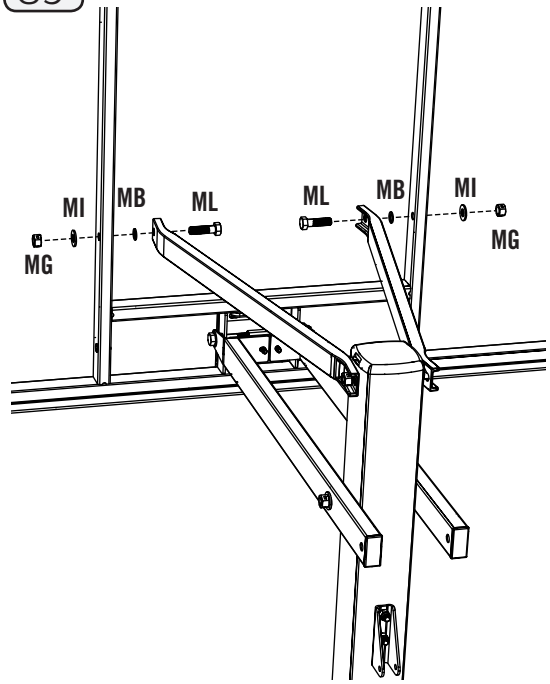

Tighten all hardware securely now.

READ BEFORE CONTINUING:

It is critical that the instructions in the following steps are followed exactly. Failure to properly orient and align the pole sections will render the pole unusable. If the pole sections are assembled incorrectly, you will have to purchase new pole sections from our Customer Service Department. If you have questions regarding the pole assembly, please call our Customer Service Department for assistance.

AT LEAST THREE ADULTS ARE REQUIRED. DO NOT ATTEMPT ASSEMBLY WITH FEWER THAN THREE ADULTS AND THREE LADDERS.

40

Make a mark 5 inches from the top of the Bottom Pole (BP).

With the Backboard facing the playing surface, carefully slide the Top/Middle Pole assembly over the Bottom Pole.

Adjust the system to the 7.5-foot setting.

Place the Wood Block on top of the Rigid Arms and strike it 6 to 7 times with a hammer or mallet (Detail 1).

You must have wood on top of the Arms before hitting them with a hammer to prevent scratching the powder coating. **The bottom edge of the Middle Pole must reach within 1/2 inch of the 5-inch mark on the Bottom Pole.**

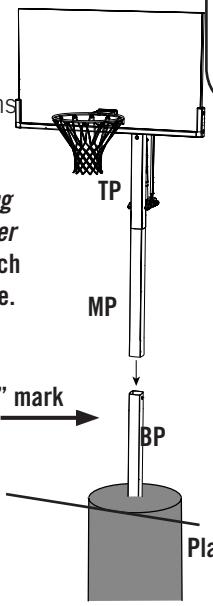

If your pole sections do not reach within 1/2 inch of the 5-inch mark after seating, DO NOT COMPLETE ASSEMBLY. Call our Customer Service number for assistance.

WARNING

The poles **must** be seated together! Even if the poles reach the 5-inch mark before seating, you must strike them with the hammer five to six times! Failure to seat the poles together could allow the poles to separate during use, which could cause serious injuries such as listed on Page One, or property damage.

DETAIL 1

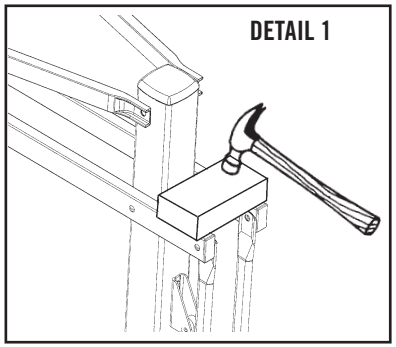

WARNING

Use extreme caution when standing on ladders to perform assembly steps. Follow all warnings and cautions on the ladder carefully. Failure to follow all of these instructions and warnings could lead to serious injuries or property damage as listed on Page One.

Required For This Page:

Electric Drill

HD9081

SS (1)

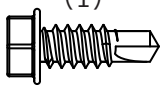

41 INSTALLING THE POLE JOINT SAFETY SCREW:

Measure up one inch from the bottom pole joint on the back of the pole and begin inserting the remaining Screw (SS). Once the Screw has entered the pole, slow the drill down to avoid stripping the Screw.

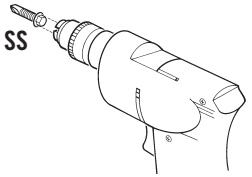

The pole joint safety Screws do not replace proper pole seating--both are required.

Always wear safety glasses when operating power tools.

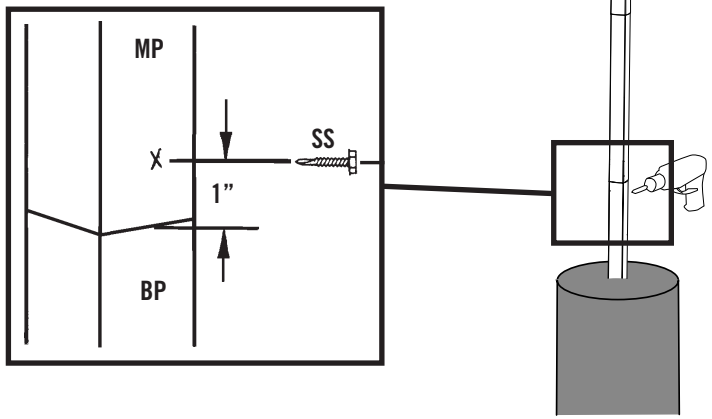

⚠ WARNING ⚠

You must follow all instructions for pole joint Screw attachment and pole seating. Failure to do so could allow the poles to separate, resulting in serious personal injuries such as cuts, broken bones, nerve damage, spinal cord or brain injury, or death. Property damage may also occur.

42

Apply Grease (MQ) to these areas.

DO NOT APPLY EXCESSIVE WEIGHT TO THE HANDLE. Do not hang anything from the Handle, as this will damage the system and void the product warranty.

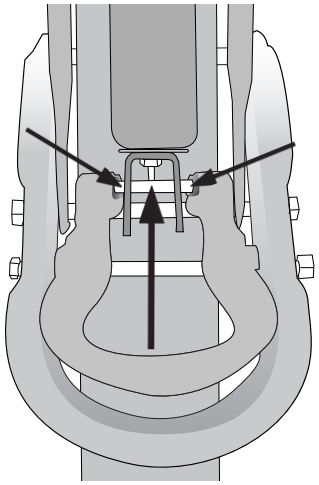

43

Attach the Net (PN).

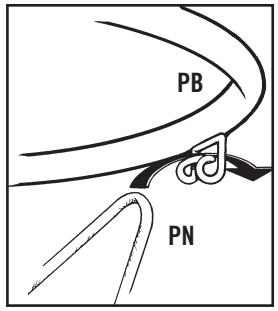

Please call our Customer Service Department at the number on Page One to obtain replacement Nets. Our Nets are shorter than average to reduce the risk of entanglement.

POLE CARE AND SYSTEM MAINTENANCE

The life of your basketball system depends on many variables. The climate, exposure to corrosives such as salt, pesticides, or herbicides, and excessive use or misuse can all contribute to pole failure, which may cause property damage or personal injury.

Check your basketball system frequently for loose hardware, excessive wear, and signs of corrosion. For safety reasons, and to prolong the life of your basketball system, you **must** take the following preventive measures.

a. Check all Nuts and Bolts. If any are loose, tighten them.
b. Check all parts for excessive wear and tear. If necessary, replace any parts that have been worn or damaged through usage. Check the Pole Cap for cracks or tears that could let water into the pole. Contact our Customer Service Department for replacement parts.
c. Inspect the Warning Sticker on the pole. If it is ripped, faded, or illegible, call our Customer Service Department to request a replacement Sticker.
d. Check all pole sections for visible rust or chipped or cracked paint. If either are present, do the following:
   1. Use an emery cloth to completely remove any rust or chipped paint.
   2. Clean the area with a damp cloth and allow it to dry.
   3. Apply two coats of a rust preventative, high gloss enamel paint to the area. Allow the paint to dry between coats.

IF RUST HAS PENETRATED THROUGH THE POLE ANYWHERE, REPLACE IT IMMEDIATELY!

Only clean the Backboard with the approved cleaning materials listed below:

Windex[1]
Joy[2]
Mr. Clean[2]
Fantastik[3]
Formula 409[4]

The use of other chemicals will void the warranty.

[1]Registered Trademark of the Drackett Products Company.
[2]Registered Trademarks of Procter & Gamble.
[3]Registered Trademark of Texize, Division of Norton Norwich Products Inc.
[4]Registered Trademark of the Clorox Company.

TO RAISE OR LOWER THE GOAL:

GRASP THE ADJUSTMENT HANDLE FIRMLY, SQUEEZE THE TRIGGER AND RAISE OR LOWER THE GOAL. WHEN THE DESIRED HEIGHT IS REACHED, RELEASE THE TRIGGER.

⚠ WARNING ⚠

FAILURE TO FOLLOW THESE WARNINGS MAY RESULT IN SERIOUS INJURY AND/OR PROPERTY DAMAGE.

Owners must ensure that all players know and follow these rules for safe operation of the system.

- Only hang from the rim briefly to regain balance or avoid injuring others. Release the rim as soon as safely possible.
- During play, especially when performing dunk type activities, keep player's face away from the backboard, rim, and net. Serious injury could occur if teeth/face come in contact with the backboard, rim, or net. Player should wear a mouth guard during play.
- Do not slide, climb, or play on pole.
- When adjusting height or moving system, keep hands and fingers away from moving parts.
- Do not allow children to move or adjust system.
- Do not wear jewelry (rings, watches, necklaces, etc.) during play. Objects may entangle in net.
- Keep organic material away from pole base. Grass, litter, etc. could cause corrosion and/or deterioration.
- Once a month check pole and all metal parts for signs of corrosion (rust, pitting, chipping). Completely remove rust and repaint with exterior enamel. If rust has penetrated any steel part, replace that part immediately.
- Check system before each use for loose hardware, excessive wear, instability, and signs of corrosion and repair before use.
- Never play on damaged equipment.
- Do not use the system to lift or hoist anything. The mechanism is designed to lift only the weight of the backboard and rim. Do not hang anything from the handle, rim backboard, or lifter arms as this will damage the system and void the warranty.



⚠ ADVERTENCIA

SI NO SE OBEDECEN ESTAS ADVERTENCIAS PUEDEN PRODUCIRSE GRAVES LESIONES Y/O DAÑOS A LA PROPIEDAD.

El propietario del sistema debe asegurarse de que todos los jugadores conozcan y respeten estas reglas para que el sistema se use en forma segura.

- Cuélguese del aro sólo en forma breve, para recuperar el equilibrio o evitar lesionar a otros jugadores. Suéltese del aro lo más pronto que pueda hacerlo con seguridad.
- Durante el juego, especialmente al embocar violentamente de alto, la cara de los jugadores debe mantenerse alejada del tablero, el aro y la red. Pueden producirse lesiones graves si los dientes o la cara entran en contacto con el tablero, el aro o la red. Los jugadores deben usar un protector bucal durante el juego.
- No se deslice, no trepe ni juegue sobre el poste.
- Mantenga las manos y los dedos alejados de las piezas movibles cuando regule la altura del sistema.
- No deje que los niños regulen el sistema.
- No use joyas (anillos, relojes, collares o gargantillas, etc.) durante el juego. Estos objetos pueden engancharse en la red.
- No permita que la base del poste entre en contacto con materiales orgánicos. El pasto, los desechos animales, etc., pueden causar corrosión y/o deterioros.
- Controle el poste y todas las piezas metálicas una vez al mes en busca de signos visibles de corrosión (oxidación, picaduras, escamado). Elimine todo rastro de óxido y vuelva a pintar con esmalte para exteriores. Si el óxido ha penetrado cualquier pieza de acero, reemplace esa pieza de inmediato.
- Inspeccione el sistema antes de cada uso para verificar que los elementos de fijación no estén flojos, que no haya desgaste excesivo, inestabilidad ni signos de corrosión. Si encuentra irregularidades, repárelas antes de usar el sistema.
- Nunca juegue con un equipo dañado.
- No use el sistema para levantar ningún objeto. El mecanismo está diseñado para elevar solamente el peso del tablero con el aro. No cuelgue nada de la agarradera, el aro, el tablero ni los brazos de elevación, ya que esto puede dañar el sistema y anular la garantía.

⚠ AVERTISSEMENT

FAUTE DE NE PAS SUIVRE CES AVERTISSEMENTS, VOUS RISQUEZ DE CAUSER DES BLESSURES GRAVES ET/OU DES DOMMAGES À L'ÉQUIPEMENT.

Le propriétaire doit s'assurer que tous les joueurs connaissent et appliquent les règles suivantes afin d'utiliser l'équipement en toute sécurité.

- Ne vous suspendez pas à l'anneau plus que nécessaire pour retrouver votre équilibre ou éviter de blesser les autres joueurs. Relâchez l'anneau aussitôt que possible.
- Lors d'un match, particulièrement dans le cas des smashs, le visage du joueur ne doit pas faire face au panneau, à l'anneau, ni au filet. Le joueur risque de graves blessures si ses dents ou son visage entrent en contact avec le panneau, l'anneau, ou le filet. Les joueurs doivent toujours porter un protège-dents lorsqu'ils jouent.
- Ne glissez pas, ne grimpez pas, et ne jouez pas sur la base ou le poteau.
- Lorsque vous ajustez la hauteur ou l'équipement, gardez vos mains et doigts loin des pièces mobiles.
- N'autorisez pas les enfants à ajuster l'équipement.
- Ne portez pas de bijoux (bagues, montres, colliers, etc.) lorsque vous jouez. Ces objets pourraient s'accrocher au filet.
- Gardez la base du poteau libre de toute matière organique. L'herbe, les déchets, etc. peuvent la corroder et la détériorer.
- Une fois par mois, vérifiez que le poteau et toutes les pièces en métal ne montrent pas de signes de corrosion (rouille, piqûres, écaillage). Enlevez toute la rouille et repeignez complètement avec une peinture pour extérieur. Si la rouille a pénétré une des pièces en acier, vous devrez remplacer immédiatement la pièce en question.
- A chaque fois que vous allez utiliser l'équipement, vérifiez d'abord l'équilibre, la possibilité de pièces desserrées ou usées, la stabilité de l'équipement et tout signe de corrosion ou réparation nécessaire avant utilisation.
- Ne jouez jamais avec un équipement endommagé.
- N'utilisez pas l'équipement pour lever ou soulever quoique ce soit. Son mécanisme a été conçu uniquement pour soutenir le poids du panneau et de l'anneau. N'accrochez rien au manche, à l'anneau, au panneau ni aux leviers sous peine d'endommager l'équipement et d'annuler la garantie.

LIFETIME BASKETBALL EQUIPMENT
5-YEAR LIMITED FACTORY WARRANTY

THE MANUFACTURER RESERVES THE RIGHT TO MAKE SUBSTITUTIONS TO WARRANTY CLAIMS IF PARTS ARE UNAVAILABLE OR OBSOLETE.



1. Lifetime basketball systems are warranted to the original purchaser to be free from defects in material or workmanship for a period of five years from the date of original retail purchase. The word "defects" is defined as imperfections that impair the use of the product. Defects resulting from misuse, abuse or negligence will void this warranty. This warranty does not cover defects due to improper installation, alteration or accident. This warranty does not cover damage caused by vandalism, rusting, "acts of nature" or any other event beyond the control of the manufacturer.

2. This warranty is nontransferable and is expressly limited to the repair or replacement of defective basketball equipment. If the equipment is defective within the terms of this warranty, Lifetime Products, Inc. will repair or replace defective parts at no cost to the purchaser. Shipping charges to and from the factory are not covered and are the responsibility of the purchaser. Labor charges and related expenses for removal, installation or replacement of the basketball system or its components are not covered under this warranty.

3. This warranty does not cover scratching or scuffing of the product that may result from normal usage. In addition, defects resulting from intentional damage, negligence, unreasonable use or hanging from the net or rim will void this warranty.

4. Liability for incidental or consequential damages is excluded to the extent permitted by law. While every attempt is made to embody the highest degree of safety in all equipment, freedom from injury cannot be guaranteed. The user assumes all risk of injury resulting from the use of this product. All merchandise is sold on this condition, and no representative of the company may waive or change this policy.

5. This product is not intended for institutional or commercial use; Lifetime Products, Inc. does not assume any liability for such use. Institutional or commercial use will void the warranty.

6. This warranty is expressly in lieu of all other warranties, expressed or implied, including warranties of merchantability or fitness for use. Neither Lifetime Products, Inc., nor any representative assumes any other liability in connection with this product.

ALL WARRANTY CLAIMS MUST BE ACCOMPANIED BY A SALES RECEIPT.
REPORT PRODUCT DEFECTS IN WRITING TO:

Lifetime Products, Inc., PO Box 160010 Clearfield, UT 84016-0010
or call (800) 225-3865 M-F 7 a.m. to 5 p.m. MST.
Please include your dated sales receipt and photographs of damaged parts.

To Register Your Product, Visit Our Website at www.lifetime.com