Water Dispenser
Setup Manual

Model No.: CLCTPOU720UVF3XB

Table of Contents

Safety Information 3

Intended Use 4

Product Features 4

Touch Panel Description 5

Product Dimensions 5

Package Contents 6

Materials Needed 6

Installation 7

Determine Installation Location 7

Install the Dispenser 7

Install the Filters and Tubing 8

Connect to the Cold Water Supply 10

Flush the Filters and Complete the Installation 11

Operation 12

Turn the Dispenser On/Off 12

Set the Clock 12

Set the Cold Temperature Setting 12

Set the Hot Temperature Setting 12

Dispense Cold and Room Temperature Water 13

Dispense Hot Water and Activate the Child Safety Lock 13

Troubleshooting 14

Cleaning and Maintenance 14

Filter Replacement Schedule 15

Replace the Filters 15

Filter Specifications 15

Care and Maintenance 16

Warranty 17

Safety Information

WARNING: To reduce risk of injury and property damage, you must read this entire guide before assembling, installing and operating the dispenser.

WARNING: This product dispenses water at very high temperatures. Failure to use properly can cause personal injury. When operating this dispenser, always exercise basic safety precautions, including the following:

- Prior to use, this dispenser must be properly assembled and installed in accordance with this manual.
- For indoor use only. Keep the water dispenser in a dry place away from direct sunlight. Do NOT use outdoors.
- Install and use only on a hard, flat and level surface.
- Do NOT place the water dispenser in an enclosed space or cabinet.
- Do NOT operate the dispenser in the presence of explosive fumes.
- Use only properly grounded outlets.
- Do not use an extension cord.
- Always grasp the plug and pull straight out from the outlet. Never unplug by pulling on the power cord.
- Do NOT use the dispenser if the cord becomes frayed or otherwise damaged. If the supply cord is damaged, it must be replaced by the manufacturer, its service agent or similarly qualified persons in order to avoid a hazard.
- To protect against electric shock, do NOT immerse cord, plug, or any other part of the dispenser in water or other liquids.
- Ensure the water dispenser is unplugged prior to cleaning.
- Never allow children to dispense hot water without proper and direct supervision. Unplug the unit to prevent unsupervised use by children.
- Service should be performed only by a certified technician.
- The appliance must not be cleaned by a water jet and is not suitable for installation in an area where a water jet could be used.

WARNING: Keep ventilation openings, in the appliance enclosure or in the built-in structure, clear of obstruction.

WARNING: Do not use mechanical devices or other means to accelerate the defrosting process, other than those recommended by the manufacturer.

- This appliance should work under environment of temperatures from 4°C~40°C (39°F~104°F) and humidity ≤90%.
- Never turn the machine upside down or lean it more than 45°.
- After turning the dispenser off, allow the dispenser to sit idle for 3 minutes before turning on again.

Intended Use

This dispenser is intended to be used in household and similar applications such as:

- Staff kitchen areas, offices and other working environments
- Farm houses
- Clients in hotels, motels and other residential type environments
- Bed and breakfast type environments
- Catering and similar non-retail applications

This appliance is not intended for use by persons (including children) with reduced physical, sensory or mental capabilities, or lack of experience and knowledge, unless they have been given supervision or instruction concerning use of the appliance by a person responsible for their safety.

Product Features

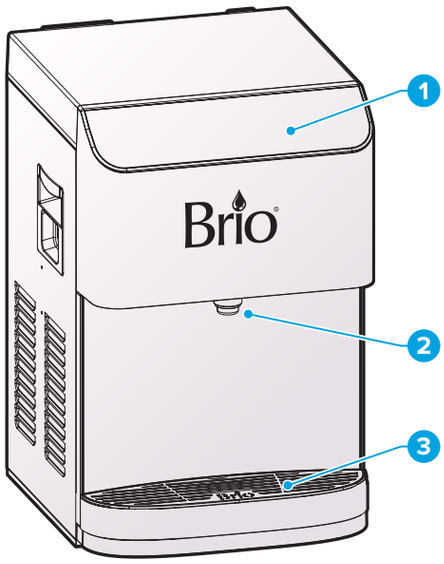

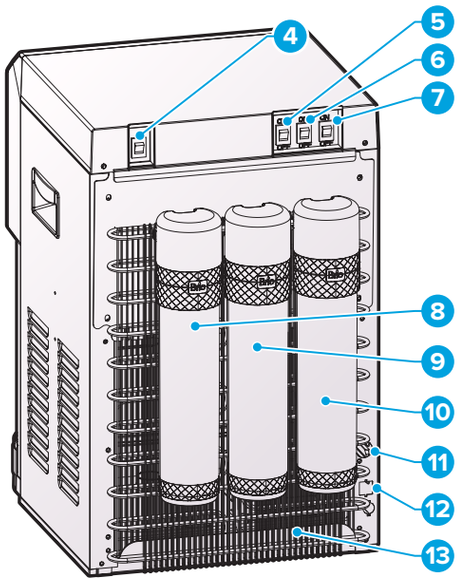

Part	Description
1	Touch panel display
2	Water tap
3	Drip tray
4	Filter reset switch
5	Night light switch
6	Cold water switch
7	Hot water switch

Part	Description
8	Sediment filter
9	Pre-carbon filter
10	Carbon block filter
11	Drain outlet
12	Water inlet
13	Condenser

Touch Panel Description

1. Up arrow button – Press to set the time on the clock and increase temperature settings.
2. Clock/Temperature display – Displays the time and water temperature setting for hot and cold water and also indicates when filters must be replaced.
3. Down arrow button – Press to set the time on the clock and decrease temperature settings.
4. Unlock button – Press to unlock the hot water, and to confirm temperature and time settings.
5. Hot water button – Press to dispense hot water.
6. Ambient water button – Press to dispense room temperature water.
7. Cold water button – Press to dispense cold water
8. Touchless Motion Sensor - Hold hand over sensor for 1 second to dispense cold water.

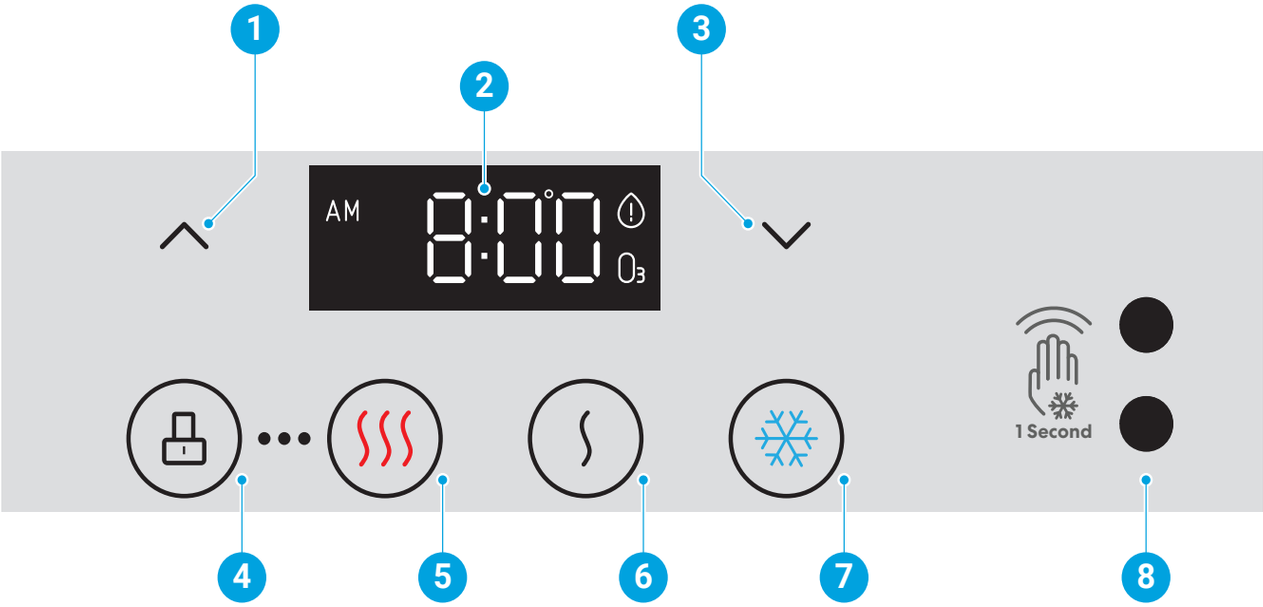

Product Dimensions

Height	Width	Depth
49.0 cm (19.3 in.)	31.7 cm (12.5 in.)	46.9 cm (18.5 in.)

Brio

Package Contents

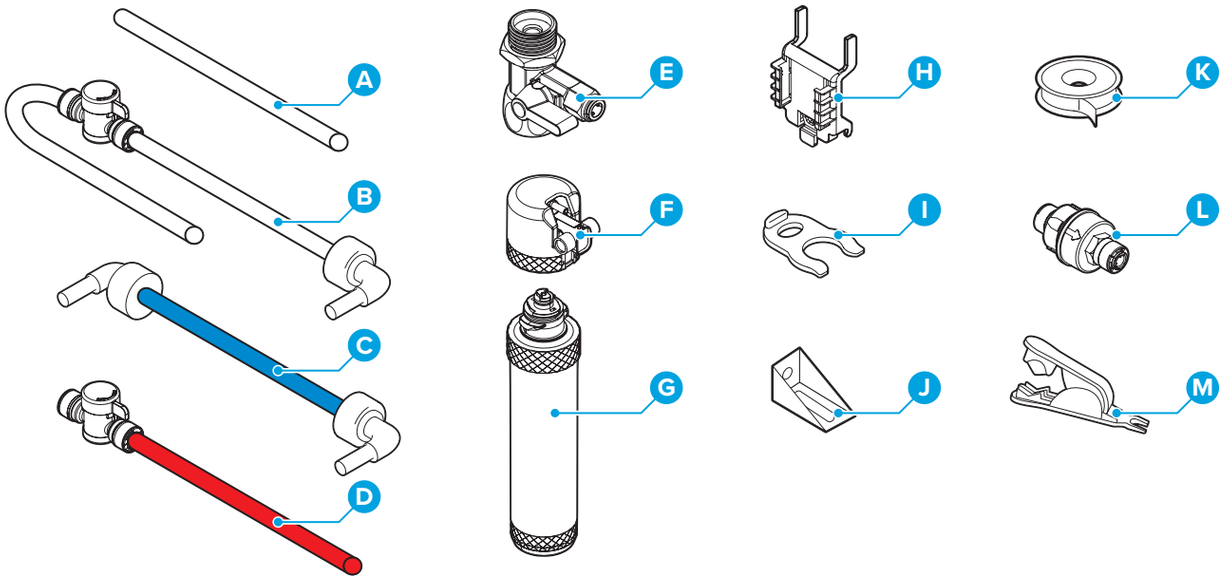

Part	Description	Quantity
A	Filter connecting tube	2
B	Shut off valve tube (7 ft.)	1
C	Elbow joint tube	1
D	Filter flushing tube (4 ft.)	1
E	Feed water adapter (with extra nut)	1
F	Filter housing	3
G	Filter (sediment, pre-carbon, carbon block)	3

Part	Description	Quantity
H	Mounting bracket	3
I	Filter clip	10
J	Grounding bracket	1
K	Plumber's tape	1
L	Pressure-reducing valve	1
M	Tubing cutter	1

Materials Needed

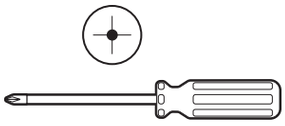

Screwdriver

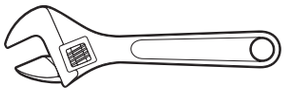

Wrench

Installation

1. Determine Installation Location

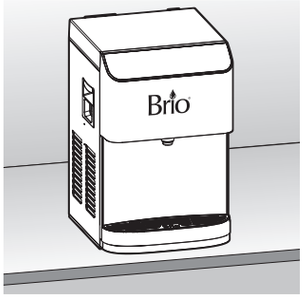

A. Place the dispenser upright.

B. Locate the dispenser on a hard and level surface in a cool shaded location near a grounded wall outlet.

NOTICE: Do NOT plug in the power cord until the entire installation section is completed.

C. Position the back of the dispenser no closer than 20 cm (8 in.) from a wall and permit free airflow between the wall and water dispenser.

2. Install the Dispenser

WARNING: To avoid a hazard due to instability of the appliance, it must be secured in place in accordance with the instructions.

A. Loosen and remove the screw on the bottom left or right of the dispenser.

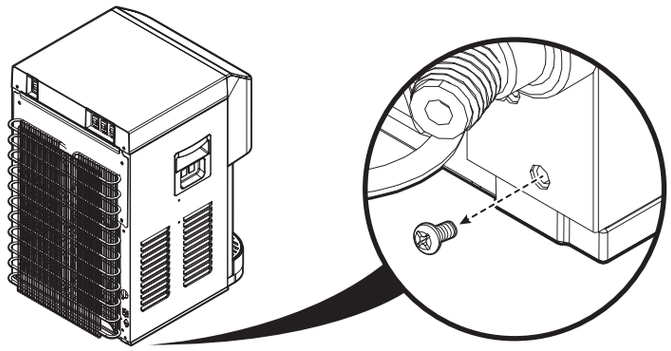

B. Use this screw to attach the grounding bracket (J) on the left or right bottom corner of the water dispenser.

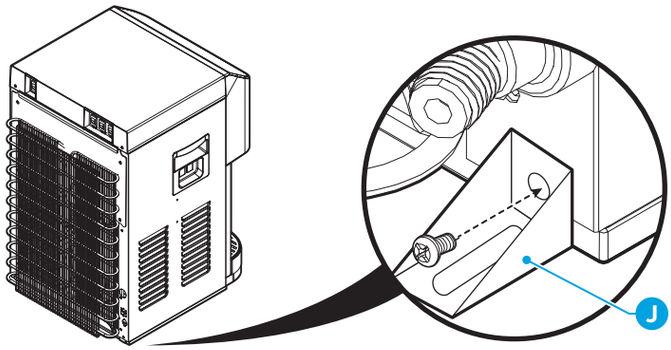

C. Make a hole on the surface where the water dispenser will be installed.

D. Attach the grounding bracket (J) on the surface by screwing tightly.

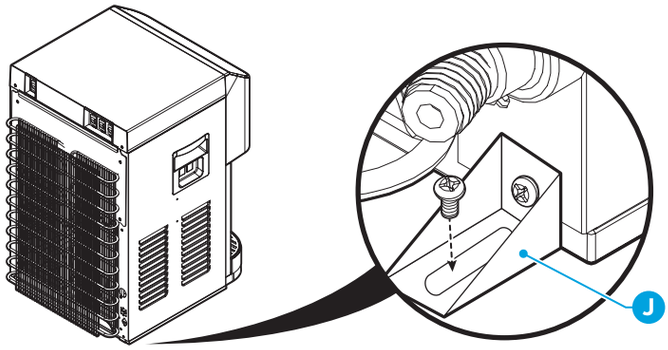

3. Install the Filters and Tubing

A. Click the three black mounting brackets (H) onto the top of the condenser.

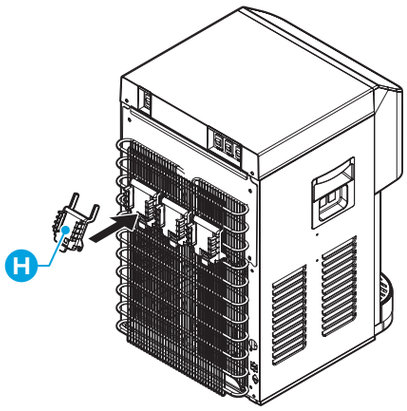

B. Attach one filter housing (F) to the top of a mounting bracket (H).

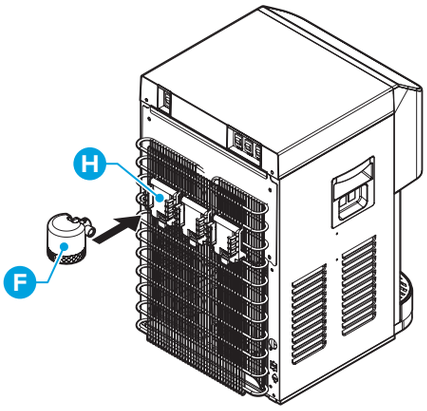

C. Connect the filter connecting tube (A) to the filter housing (F).

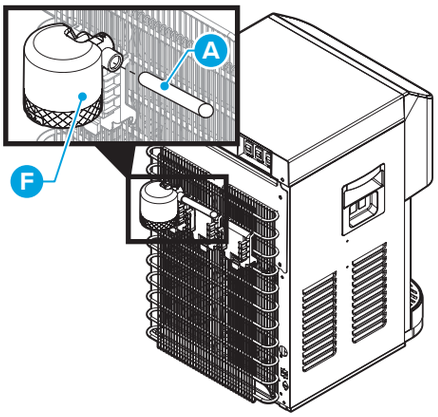

D. Slide the next filter housing (F) onto the middle mounting bracket (H) and connect the other end of the filter connecting tube (A).

E. Repeat for the third filter housing.

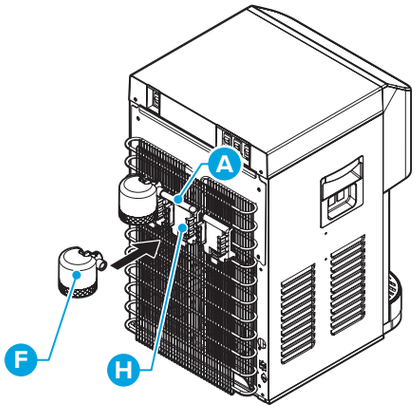

F. Connect the shut off valve with tube (B) to the left filter housing (F).

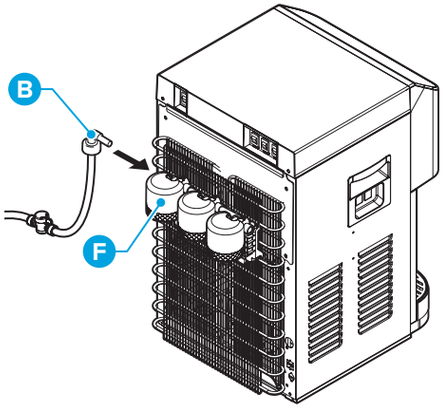

G. Connect the filters (G) into the filter housings (F). The sediment filter goes on the left, the pre-carbon filter in the middle, and the post carbon on the right.

H. Add filter clips (I) to each connection where indicated.

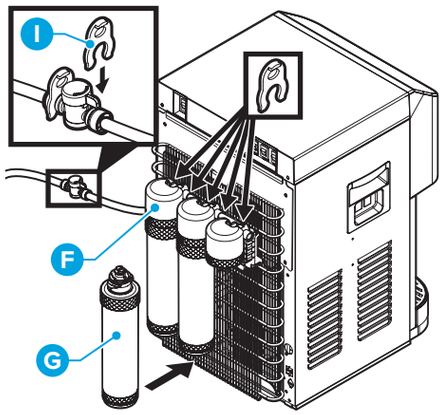

Brio

4. Connect to the Cold Water Supply

CAUTION: DO NOT CONNECT THIS WATER LINE TO A HOT WATER SUPPLY LINE. The water supply to the unit MUST be from the COLD WATER LINE. Using HOT WATER will severely damage your filters.

A. Turn off and then disconnect the current cold water supply line.

B. Connect the feed water adapter (E) to the cold water supply line.

C. Connect the cold water supply line on top of the feed water adapter (E).

NOTE: An extra adapter nut is included on top of the feed water adapter (E) to attach to a 3/8 in. or 1/2 in. feed plumbing line.

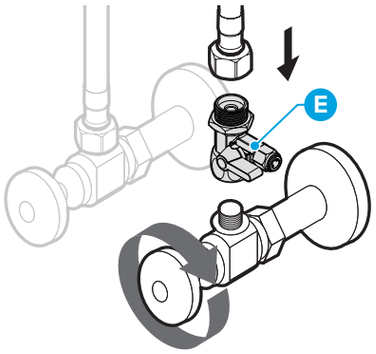

D. Cut the shut off valve with tube (B) where indicated using the tubing cutter (M).

E. Connect the two cut ends of the tubing straight into each end of the pressure-reducing valve (L). Ensure that the arrow will be pointing towards the flow of water into the dispenser when the shut off valve with tube (B) is connected in the next steps.

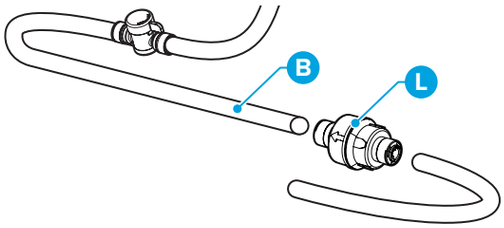

F. Insert the shut off valve with tube (B) straight into the quick connector piece of the feed water adapter (E).

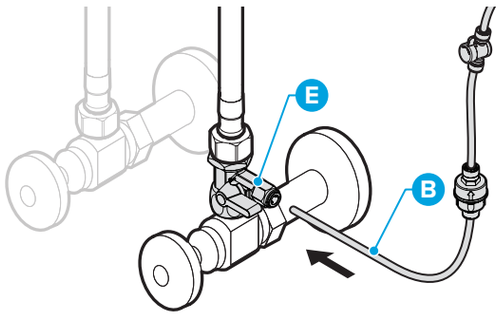

G. Gently tug on the tube (B) to ensure a secure connection with the feed water adapter (E).

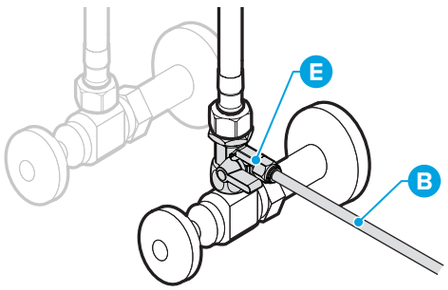

5. Flush the Filters and Complete the Installation

IMPORTANT: Follow this procedure every time you replace your filters.

IMPORTANT: Ensure the water supply is off before you begin.

A. Connect the red filter flushing tube (D) to the right filter housing (F).

B. Lay the open end of the filter flushing tube (D) over a sink or receptacle to collect water.

C. Turn the water supply on at the main source and the shut off valve with tube (B). Allow the water to flow out of the filter flushing tube (D) and into the sink/receptacle.

D. Flush the filters for a minimum of 5 minutes. The recommended rate is 1.5-3 gallons of water (about 10 minutes) or until the water is clear in appearance.

E. Shut off the valve at the water source.

F. Remove the red filter flushing tube (D). Connect the blue elbow joint tube (C) to the right filter housing (F) and to the water inlet hole on the back of the dispenser.

G. Place filter clips (I) at the two connecting ends of the elbow joint tube (C).

H. Turn on the main water supply.

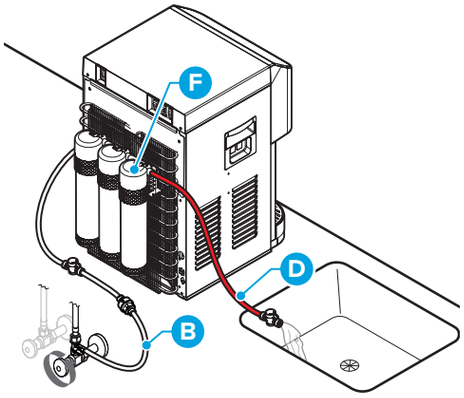

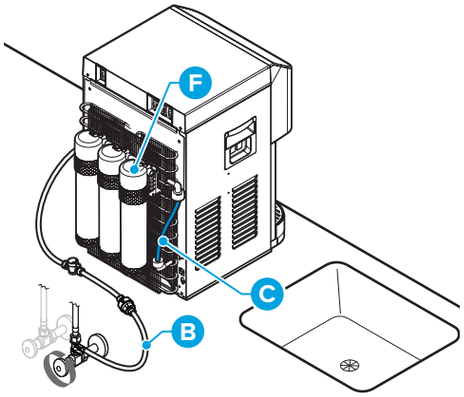

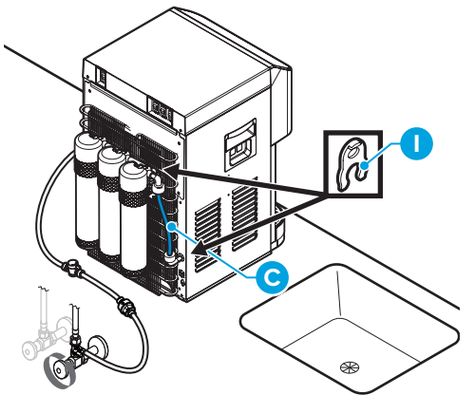

Brio

Operation

IMPORTANT: This unit has been tested and sanitized prior to packing and shipping. During transit, dust and odors can accumulate in the tank and lines. Dispense and dispose at least one quart of water prior to drinking any water.

Turn the Dispenser On/Off

IMPORTANT: Before you activate the hot and cold switches, ensure water has filled the tanks inside the dispenser in order to prevent dry heating.

1. Plug in the dispenser and turn the On/Off switch to On.
2. Run water through the tap until water begins to dispense.
3. To power on the cooling system, flip the cooling switch on the back of the dispenser to the On position. The cold water button on the front of the dispenser illuminates in blue indicating that the dispenser is cooling water. The light turns off when the cooling process is complete.
4. To power on the heating system, flip the heating switch on the back of the dispenser to the On position. The hot water button on the front of the dispenser illuminates in red indicating that the dispenser is heating water. The light turns off when the heating process is complete.

Set the Clock

1. Press and hold the up and down arrow buttons for 3 seconds until the clock display begins to blink.
2. Press the cold water button to set the minute and the hot water button to set the hour. Use the up and down arrow buttons to scroll until the correct minute/hour is displayed.
3. Press the hot water lock button when finished.

Set the Cold Temperature Setting

1. Press and hold the down arrow button for 3 seconds until the cold water button starts to blink and the current cold water temperature appears on the display.
2. Use the up and down arrow buttons to scroll to your desired cold water temperature. The range is 39˚F to 59˚F (4˚C to 15˚C).
3. Press the lock button when finished. The temperature stops blinking and the time is displayed.

Set the Hot Temperature Setting

1. Press and hold the up arrow button for 3 seconds until the hot water button starts to blink and the current hot water temperature appears on the display.
2. Use the up and down arrow buttons to scroll to your desired hot water temperature. The range is 174˚F to 194˚F (79˚C to 90˚C).
3. Press the lock button when finished. The temperature stops blinking and the time is displayed.

Dispense Cold and Room Temperature Water

NOTE: Water will take approximately 1 hour after plugging in and turning on to become completely chilled.

1. Place a drinking glass or container under the tap and press the cold water button to dispense cold water or the ambient water button to dispense room temperature water.
2. Release the button when your container is full.

Dispense Hot Water and Activate the Child Safety Lock

CAUTION: This unit dispenses water at temperatures that can cause severe burns. Avoid direct contact with hot water. Keep children and pets away from the unit while dispensing. Never allow children to dispense hot water without proper and direct supervision. Disable the heating feature by switching the heating convenience switch to the Off position.

NOTE: Water will take approximately 15-20 minutes after plugging in and turning on to reach its hottest temperature.

1. This water dispenser is equipped with a child safety feature in order to prevent inadvertent dispensing. To disable the child safety lock feature, press the lock button.
2. To dispense hot water, place a drinking glass or container under the tap and press the hot water button.
3. Release the button when your container is full.

Troubleshooting

Problem	Solution
The cold water is not cold.	• It takes up to one hour after setup to dispense cold water. • Make sure the power cord is properly connected to a working outlet. • Make sure the back of the dispenser is at least 20 cm from a wall and there is free airflow on all 20 cm sides of the dispenser. • Make sure green power switch on back of dispenser is On. • If water still isn't cold, call customer service at +1 844-257-4103 for assistance.
The hot water is not hot.	• It takes 15-20 minutes after setup to dispense hot water. • Make sure the power cord is properly connected to a working outlet. • Make sure red power switch on back of dispenser is On.
The dispenser is noisy.	• Ensure the dispenser is located on a level surface. • The heating tube may be generating a slight noise. This is normal.
The machine is not dispensing water.	• The dispenser has become too cold and the lines are blocked by ice. Turn the cooling switch off for at least 4 hours to allow the water in the lines to thaw.

Cleaning and Maintenance

This dispenser runs on a continuous UV cleaning cycle.
It works for 40 minutes (UV icon on the display is on), turns off for 140 minutes, and then cycles back on again as long as the dispenser is plugged in and on.

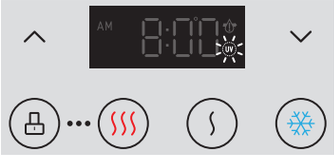

Task	Frequency	Instruction
Sanitizing	Every 3 months	Use a disinfectant, purchased separately, following directions from manufacturer for proper amount to use. Use the Cleaning the Dispenser directions when sanitizing.
Removing minerals deposits	Every 6 months	Mix 4 liters water with 200g citric acid crystals, inject into the machine and make sure the water can flow out of the hot water tap. Switch on the power and allow it to heat for about 10 minutes. After 30 minutes, drain the liquid and clean it with water, dispensing two or three times.

Filter Replacement Schedule

Filter Type	Replacement Schedule	Function
Pre-carbon	6 months or 950 gallons	Reduces chlorine, taste and odor, lead and cysts.
Sediment	6 months or 950 gallons	Performs a coarse filtration of original water. Removes mud, sand, iron, rust, suspensions and impurities.
Carbon block	6 months or 950 gallons	Taste and impurity removal.

Replace the Filters

IMPORTANT: Only replace the filters with new filters designed for this dispenser. Any other type of filter will damage the machine and void any warranty.

When a filter is approaching the end of its life, the red indicator light starts to blink. When the filter has reached the end of its life, the indicator light remains red. To change filters:

1. Shut off the water supply.
2. Remove the old filters and replace with new filters. Ensure the sediment filter is on the left and the carbon block filter is on the right.
3. To flush your new filters, follow the instructions in Step 5 - Flush the Filters and Complete the Installation.
4. Hold the filter reset switch on the back of the unit for 3 seconds until the filter life reminder light is off.

Filter Specifications

Sediment Filter
(Sediment, Dirt, and Rust Removal)

Filter Capacity	950 Gallons
Flow Rate	0.8 GPM
Suggested PSI	14.5 - 58 psi
Temperature	33 - 100 °F

Pre-carbon Filter
(Taste and Impurity Removal)

Filter Capacity	950 Gallons
Flow Rate	0.8 GPM
Suggested PSI	14.5 - 58 psi
Temperature	33 - 100 °F

Post Carbon Filter
(Taste and Impurity Removal)

Filter Capacity	950 Gallons
Flow Rate	0.8 GPM
Suggested PSI	14.5 - 58 psi
Temperature	33 - 100 °F

Care and Maintenance

- Keep this dispenser in a dry and cool place and avoid direct sunshine.
- Ensure the back of the dispenser is at least 20 cm (8 in.) away from the wall.
- Never put the dispenser on paper or foam, which may store water and then cause creepage. Never put anything flammable beside this machine.
- Do not use the dispenser outdoors or in a place that can be splashed by water.
- If the dispenser is not in use for longer than a 24-hour period, turn off the heating switch or the refrigerating switch to save power and drain any remaining water.
- If the water supply is cut off, shut off the water supply and turn the dispenser off. When the water supply is back on, re-open the water supply to the dispenser, turn the dispenser on, and allow the dispenser to run in order to discharge sediment.

Warranty

Brio ("Vendor") warrants to the original purchaser of the Brio Water Coolers (the "Product"), and to no other person, that if the Product is assembled and operated in accordance with the printed instructions accompanying it, then for a period of one (1) year from the date of purchase, all parts in the Product shall be free from defects in material and workmanship. This Limited Warranty shall be limited to repair or replacement of parts, which prove defective under normal use and service and which Vendor shall determine in its reasonable discretion upon examination to be defective. To take advantage of this Limited Warranty, please follow these steps:

1. Please retain your sales slip or invoice, as Vendor may require reasonable proof of your date of purchase.
2. Contact Vendor's Customer Service Department using the contact information listed below.
3. Return parts to Vendor, per Vendor's instructions, at your cost and expense.
4. Upon receipt by Vendor, Vendor shall advise you in writing whether a defect covered by this Limited Warranty exists in any returned part and whether your claim has been approved or denied.
5. Upon Vendor's approval of your claim, Vendor will replace such defective part without charge to you.

WHAT THIS LIMITED WARRANTY DOES NOT COVER: This Limited Warranty does not cover any failures or operating difficulties of the Product due to accident, abuse, misuse, alteration, misapplication, improper installation or improper maintenance or service by you or any third party, or failure to perform normal and routine maintenance on the Product, as set out in the User's Manual. In addition, this Limited Warranty does not cover damages to the finish, such as scratches, dents, discoloration or rust after purchase.

This Limited Warranty is the only express warranty given on the Product and is in lieu of all other express warranties. Vendor disclaims all warranties for products that are purchased from seller other than authorized retailers or distributors. THIS LIMITED WARRANTY RESTRICTS THE DURATION OF ANY AND ALL IMPLIED WARRANTIES, INCLUDING WITHOUT LIMITATION, THE IMPLIED WARRANTY OF MERCHANTABILITY AND FITNESS FOR A PARTICULAR PURPOSE TO THE ONE (1) YEAR TERM OF THIS LIMITED WARRANTY. UPON THE EXPIRATION OF THE ONE (1) YEAR TERM OF THIS LIMITED WARRANTY, VENDOR DISCLAIMS ANY AND ALL IMPLIED WARRANTIES, INCLUDING WITHOUT LIMITATION THE IMPLIED WARRANTIES OF MERCHANTABILITY AND FITNESS FOR A PARTICULAR PURPOSE, THE PRODUCT BEING THUS SOLD AS-IS, WITH ALL FAULTS. FURTHER, VENDOR SHALL HAVE NO LIABILITY WHATSOEVER TO PURCHASER OR ANY THIRD PARTY FOR ANY SPECIAL, INDIRECT, PUNITIVE, INCIDENTAL, OR CONSEQUENTIAL DAMAGES. OTHER THAN THIS LIMITED WARRANTY, THERE ARE NO WARRANTIES WHICH EXTEND BEYOND THE DESCRIPTION ON THE FACE HEREOF. Vendor assumes no responsibility for any defects caused by third parties. This Limited Warranty gives you specific legal rights, and you may have other rights which vary from state to state. State law may also override statements in this Limited Warranty regarding the restriction on the duration of implied warranties. Some jurisdictions do not allow exclusion or limitation of special, incidental or consequential damages, or limitations on how long a warranty lasts, so the above exclusion and limitations may not apply to you.

Brio®

Contact Us

Call: +1 844-257-4103

©2020 DTWUSA