GE APPLIANCES

# WATER FILTRATION SYSTEM


**SAFETY INFORMATION** . . . . . .3

**SYSTEM OVERVIEW** . . . . . .4

**INSTALLATION INSTRUCTIONS**
Cold Water Connection. . . . . .5
Faucet Installation . . . . . .6
Mounting the System. . . . . .7
Filter Replacement. . . . . .8
Flush Procedure . . . . . .8

**TROUBLESHOOTING TIPS**. . . . . .9

**PARTS LIST** . . . . . .10

**LIMITED WARRANTY** . . . . . 11

**CONSUMER SUPPORT** . . . . . .12


**OWNER'S MANUAL & INSTALLATION INSTRUCTIONS**

GXK255TBN

**ENGLISH**

UPC C ®

Certified by IAPMO R&T against NSF/ ANSI Standard 42, 53, 401 and CSA B483.1 for the reduction of claims specified on the Performance Data Sheet, and at Iapmo.org

**ESPAÑOL**

Para consultar una version en español de este manual de instrucciones, visite nuestro sitio de internet GEAppliances.com.

GE is a trademark of the General Electric Company. Manufactured under trademark license.

31-6000260 Rev. 3 05-23 GEA

## THANK YOU FOR MAKING GE APPLIANCES A PART OF YOUR HOME.

Whether you grew up with GE Appliances, or this is your first, we're happy to have you in the family.

We take pride in the craftsmanship, innovation and design that goes into every GE Appliances product, and we think you will too.

GE APPLIANCES

# IMPORTANT SAFETY INFORMATION
# READ ALL INSTRUCTIONS BEFORE USING

**⚠WARNING** **IMPORTANT SAFETY INSTRUCTIONS**

To reduce the risk of fire, explosion, electric shock, or injury when using your system follow these basic safety precautions:

- To reduce the risk associated with choking, do not allow children under 3 years of age to have access to small parts during the installation of this product.
- To reduce the risk associated with the ingestion of contaminants, do not use with water that is microbiologically unsafe or of unknown quality without adequate disinfection before or after the system. Systems certified for Cyst reduction may be used on disinfected waters that may contain filterable Cysts.
- To reduce the risk associated with hazardous voltage due to an installer drilling through existing electric wiring or water pipes in the area of installation, do not install near electric wiring or piping which may be in path of a drilling tool when selecting the position to mount the system bracket.
- If this device is not maintained and operated as specified in the owner's manual, there is a risk of exposure to contaminants. For more information, visit the manufacturer's internet website at geappliances.com or the California State Water Resources Control Boards' internet website at **waterboards.ca.gov.**

**⚠CAUTION** To reduce the risk of injury when using your system follow these basic safety precautions.

- To reduce the risk of physical injury, depressurize system as shown in manual prior to cartridge removal.

## NOTICE:

- Read and follow Use Instructions before installation and use of this system.
- Installation and use MUST comply with all state and local plumbing codes.
- Do not use on a hot water supply (100°F max.). Install on a cold water line only.
- Protect from freezing, remove filter cartridge when temperatures are expected to drop below 35° F (1.7° C).
- Do not install if water pressure exceeds 125psi (8.8 Kg/cm$^2$). If your water pressure exceeds 80 psi (5.6 Kg/cm$^2$), you must install a pressure limiting valve. Contact a plumbing professional if you are uncertain how to check your water pressure.
- Do not install systems in areas where ambient temperatures may go above 110° F (43.3° C).
- The disposable filter cartridge should be replaced every 6 months, at the rated capacity or sooner if a noticeable reduction in flow rate occurs.
- Where a back flow prevention device is installed on a water system, a device for controlling pressure due to thermal expansion must be installed.
- Do not install where water hammer conditions may occur. If water hammer conditions exist you must install a water hammer arrester. Contact a plumbing professional if you are uncertain how to check for this condition.
- Ensure all tubing and fittings are secure and free of leaks.
- On plastic fittings, never use pipe sealant or pipe dope. Use PTFE thread tape only as pipe dope may deteriorate the plastic.
- Do not use a torch or other high temperature sources near system, cartridges, plastic fittings or plastic plumbing.
- Do not install in direct sunlight or outdoors.
- Do not install near water pipes which will be in path of a drilling tool when selecting the position to mount the bracket.
- Mount system in such a position as to prevent it from being struck by other items used in the area of installation.
- Ensure that the location and fasteners will support the weight of the system when installed and full of water.

# READ AND SAVE THESE INSTRUCTIONS

# How it works

This system allows you to choose between filtered and unfiltered water from two different faucets. The system consists of a faucet and filters. The existing water line is split into two lines. One line passes through the filtration system to the newly installed faucet. The other line connects directly to the existing kitchen faucet.

The existing kitchen faucet will dispense normal unfiltered water. The newly installed faucet connected through the filters will dispense filtered water.

You will notice a slightly slower flow of water when filtered water is being dispensed.

**Right Hand Installation:**

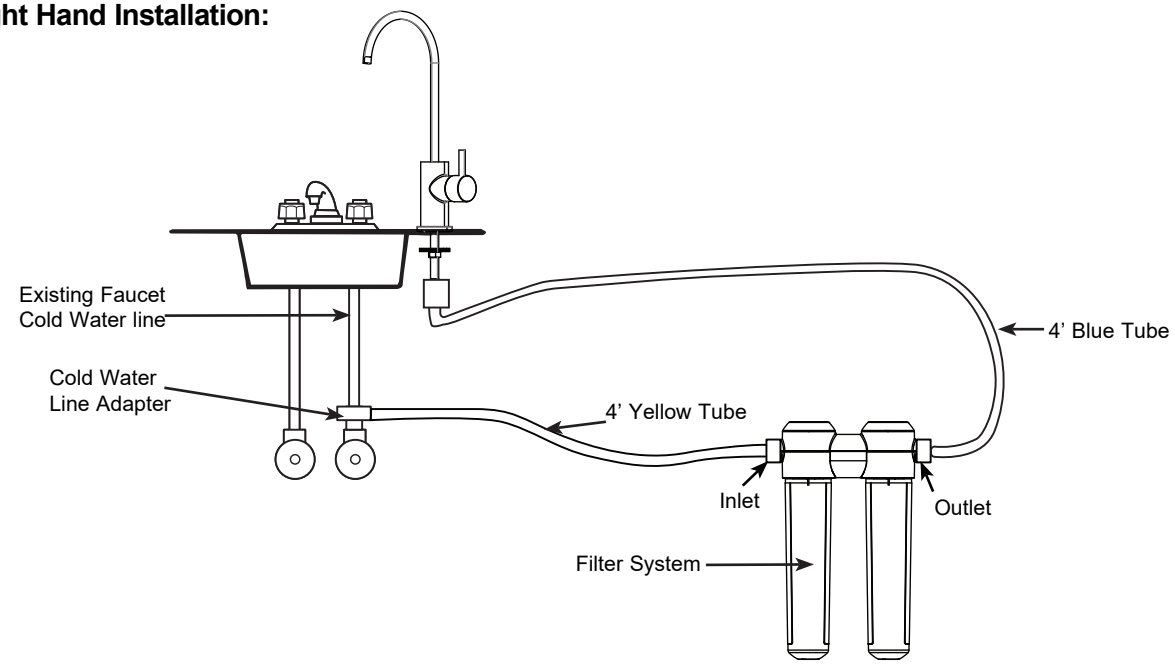


**Left Hand Installation:**

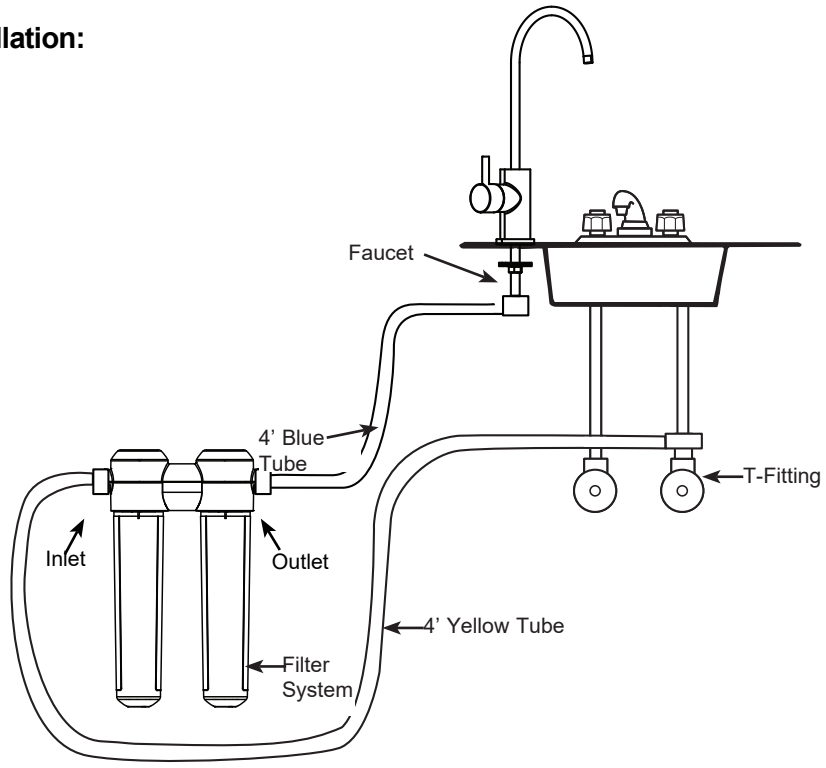


## Specification Guidelines

Many bad tastes and/or odors are reduced in water using activated carbon filter canisters. They are most often used to reduce chlorine taste and odor. They can also reduce other undesirable elements from drinking water supplies.

**NOTE:** Small amounts of hydrogen sulfide (noticeable as “rotten egg” odor) may be reduced by taste and odor filters for a short time, but the carbon media is quickly exhausted. Other water conditioning equipment is usually required for the continuous treatment of hydrogen sulfide.

## BEFORE YOU BEGIN

**Read these instructions completely and carefully.**

- **IMPORTANT –** Save these instructions for local inspector's use.
- **IMPORTANT –** Check with your local public works department for plumbing codes. You must follow their guides as you install the Water Filtration system.
- **Note to Installer –** Be sure to leave these instructions with the Consumer.
- **Note to Consumer –** Keep these instructions for future reference.
- **Skill level** – Installation of this appliance requires basic mechanical and electrical skills.
- **Completion time** – 60-90 minutes
- Proper installation is the responsibility of the installer.
- Product failure due to improper installation is not covered under the Warranty.

**⚠WARNING** Read "Important Safety Information" on page 2 before beginning installation.

## TOOLS AND MATERIALS REQUIRED FOR INSTALLATION

- Phillips screwdriver
- Two (2) adjustable wrenches
- Electric drill and drill bit to drill 0.5" hole (type as required) if mounting hole is needed for faucet
- Tape measure
- If your main water line is a rigid pipe, you will require a compression fitting and possibly other plumbing hardware to complete the installation (sold separately).

**NOTICE —** To avoid damaging the sink or counter top, consult a qualified plumber or installer for drilling procedures. Special drill bits may be needed for granite, stone, porcelain or stainless steel.

## CONTENTS INCLUDED WITH THE PRODUCT

- Water filter system assembly, including mounting screws
- Water line adapters and tubing
- Faucet
- Teflon tape

## CARTRIDGE SPECIFICATIONS

**Performance Data – Filtration System GXK255TBN Using Filter FQK2J**

Rated/certified capacity = 300 gallons

Certified flow rate = 1.0 GPM

Performance data sheet is available at **gewaterfilters.com**

## COLD WATER CONNECTION

A typical connection using the included water supply fitting is shown in the illustration below.

1. Close the cold water shutoff valve and open the faucets to relieve pressure and drain water from the sink cold water pipe.
2. Disconnect the existing cold water line from the water shutoff valve.

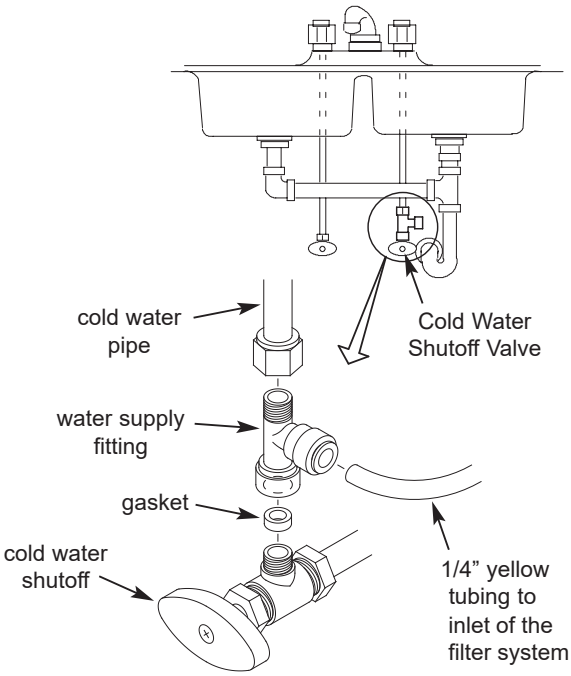


3. Make sure that the water supply fitting's gasket is inside the female threaded portion of the fitting.
4. Install the water supply fitting onto the cold water shutoff valve, where the existing cold water line was removed, and hand tighten. Finish tightening with two adjustable wrenches. Be careful not to overtighten or cross thread as damage to threads can occur. Some threads may be exposed when adapter is fully seated.
5. Connect the existing cold water line to the male threaded portion of the water supply fitting and hand tighten. Finish tightening with two adjustable wrenches. Be careful not to overtighten or cross thread as damage to threads can occur. Some threads may be exposed when adapter is fully seated

# Installation Instructions

## INSTALL THE FAUCET

Be sure there is room underneath and above the sink to make the needed connections. Select one of the following places to install the valve (1/2” diameter hole required):

**A.** In an existing sink spray attachment or soap dispenser hole.

**B.** In a hole to be drilled in the sink top.

**C.** In a hole to be drilled in the counter top, next to the sink.

**NOTES:**

- Be sure the Faucet base will fit flat against the surface at the selected location.

**Installation Steps**

1. If drilling is needed, make a 1/2″ diameter hole. **Be sure to use the proper procedure for drilling granite, stone, porcelain or stainless steel. Special drill bits may be needed. Consult a qualified plumber for the proper procedure.**
2. Slide up the escutcheon and base upholder on the faucet stud.
3. Install the assembly of the faucet and escutcheon by sliding down the faucet stud in the mounting hole.
4. On the underside of the sink or countertop, slide the black plastic washer, star washer and mounting nut over the stud. With the washers in place between the countertop and mounting nut, hand tighten with the nut. Finish tightening with a wrench. Be careful not to overtighten.
5. Hand tighten the faucet connector to the faucet stud.

   Finish tightening with two adjustable wrenches. Be careful not to overtighten or cross thread as damage to threads can occur. Some threads may be exposed when connector is fully seated.
6. Insert blue tubing fully into the faucet connector. Pull firmly on tube to make sure it is secure.

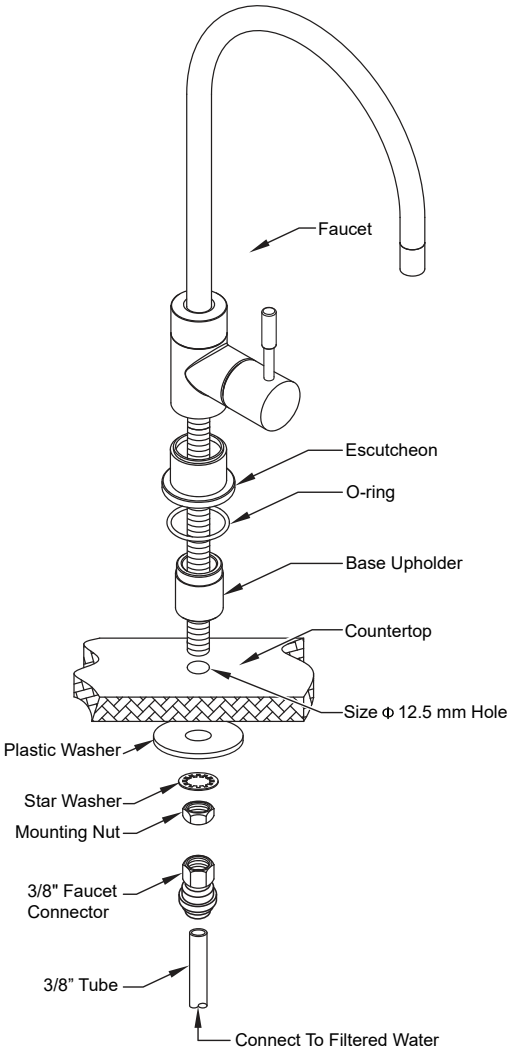

## MOUNTING SYSTEM INSTALLATION

Pick a location under the sink to mount the system. Location should be easily accessible, with 4” of clearance between the bottom of the filter canisters and the floor or bottom of the cabinet; any less will result in difficulty of removing filter canisters. Allow enough space on either side of the system for the tubing connections. System should be mounted at least 7” from front of cabinet to allow proper routing of tubing.

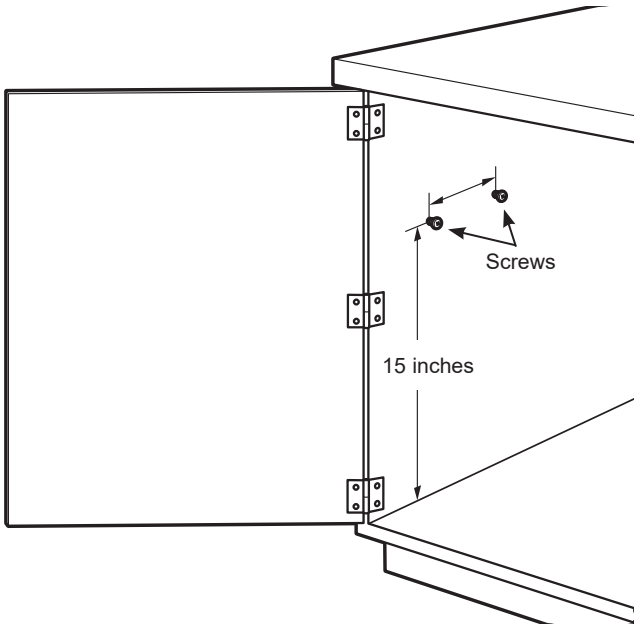


### SCREW INSTALLATION

1. Remove the top cover of system.

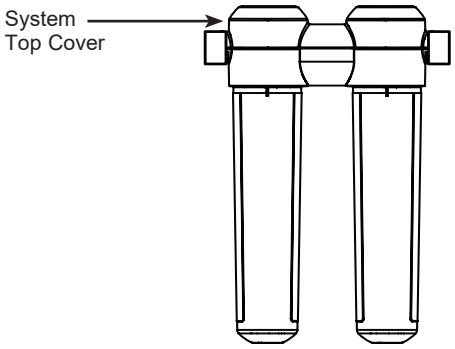


2. Screws should be placed a minimum of 15 inches above the bottom of the cabinet or floor where the system is to be mounted.
   **NOTE: Any distance lower may result in filter canisters interfering with the floor when removed.**
3. Use the system as a template to mark screw hole locations where the screws are to be installed. Install screws into the wall, leaving 3/16 inch clearance between the head of the screw and wall (drill pilot holes if needed). Use anchors if mounting to drywall. Anchors require a 1/4” hole.

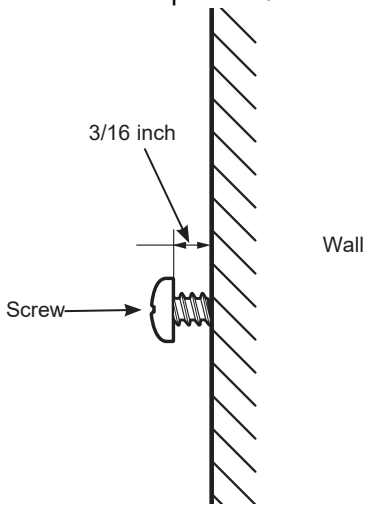


4. Hang system on screws and tighten until system is held firmly.
5. Install top cover onto system.
6. Install 4 foot long yellow tube into inlet (left side) of system (inlet and outlet are labeled on top of the system).
7. Install 4 foot long blue tube into outlet (right side) of system. Pull firmly on tubes to make sure they are secure.
8. Remove shrink wrap from filters and install in system by turning approximately 1/3 turn until locked into place. Filter will raise up as it is turned. Filter label will be centered and facing forward when fully installed.

   **NOTE: System may exhibit low flow or no flow at all if the filter is not fully installed.**
9. Turn on water supply valve and check for leaks.
10. Perform Flush Procedure as described on page 8, steps 3-6.

# Installation Instructions

## INSTALLING OR REPLACING THE FILTER CANISTERS

**TO PROPERLY MAINTAIN SYSTEM AND REDUCE THE RISK OF PROPERTY DAMAGE DUE TO WATER LEAKAGE, CHANGING FILTER AS REQUIRED.**

If installing the system for the first time skip to step 3.

1. Remove the filter canisters from the manifold by rotating the canisters to the left about 1/3 turn. **NOTE:** A small amount of water from the tubing between the filter and the faucet may come out. A small towel should be able to catch it.
2. Remove shrink wrap on the new replacement filter canisters. Install the new canisters into the manifold by turning to the right about 1/3 turn until the filter stops. The filter will rise up as it is turned.

## FLUSH PROCEDURE

3. Turn on cold side of kitchen faucet. Turn control valve so it is pointing towards kitchen faucet (water will flow slower when passing through filters).

**NOTE: System may make noise during this procedure.**

4. Check for water leaks around the system.
5. Allow the system to run for 11 gallons (or 10 minutes) to flush out any harmless carbon fines that may be present.
6. Turn off faucet and check around system for leaks.

### Replacement Filter Canisters

FQK2J—Replacement filter canister
For replacement parts, call toll-free 800-952-5039 (US)

## EMERGENCY REPLACEMENT PROCEDURE

Whenever water of unknown quality is passed through the GE Water Filtration system, the filter canisters should be discarded and the filtration system flushed.

**⚠WARNING** To reduce risk of ingestion of contaminants, do not use with water that is microbiologically unsafe or of unknown quality without adequate disinfection before or after the system.

**Circumstances that may require replacing the filters are:**

- Boil water advisory
- Flooding of the GE Water Filtration system
- Long-term non-use

**The procedure for flushing the GE Water Filtration system is:**

1. See Replacing the Filter Canisters section and follow steps 1–6.

# **Troubleshooting Tips...** Before you call for service

Save time and money! Review the charts on the following pages first and you may not need to call for service.

| Problem | Possible Causes | What To Do |
|---|---|---|
| **Water contains tiny black particles** | **New filter canisters contain activated carbon.** | Turn on the filtered water faucet and allow to run for 11 gallons (or 10 minutes) to flush out any harmless carbon fines that may be present. |
| **Water has air bubbles and is cloudy** | **Air in system after installation.** | Will go away after water runs for a while. |
| **Chlorine taste and odor in the product water** | **The filter canisters are no longer reducing chlorine taste and odor from the water supply.** | Replace the filter canisters. |
| **Water dispenses very slowly** | **The filters have been installed for too long.** | A six-month change-out period is recommended. Replace both filter canisters. |
| | **The filter canisters have become clogged.** | High sediment levels can cause premature clogging. Replace both filter canisters. |
| | **Filter not installed fully** | Ensure filter is fully installed, label should be centered and facing forward. |
| **Fittings are leaking** | **Tubing may not be installed properly.** | Fully follow the installation instructions and be sure the tubing is free of nicks, burrs, etc., and is installed to the proper depth. |
| **No water dispensing from system** | **Filter canisters not fully installed.** | Fully follow the filter replacement instructions. |

**If you are still having trouble, please call us at 800-952-5039 (US)**

# Parts List

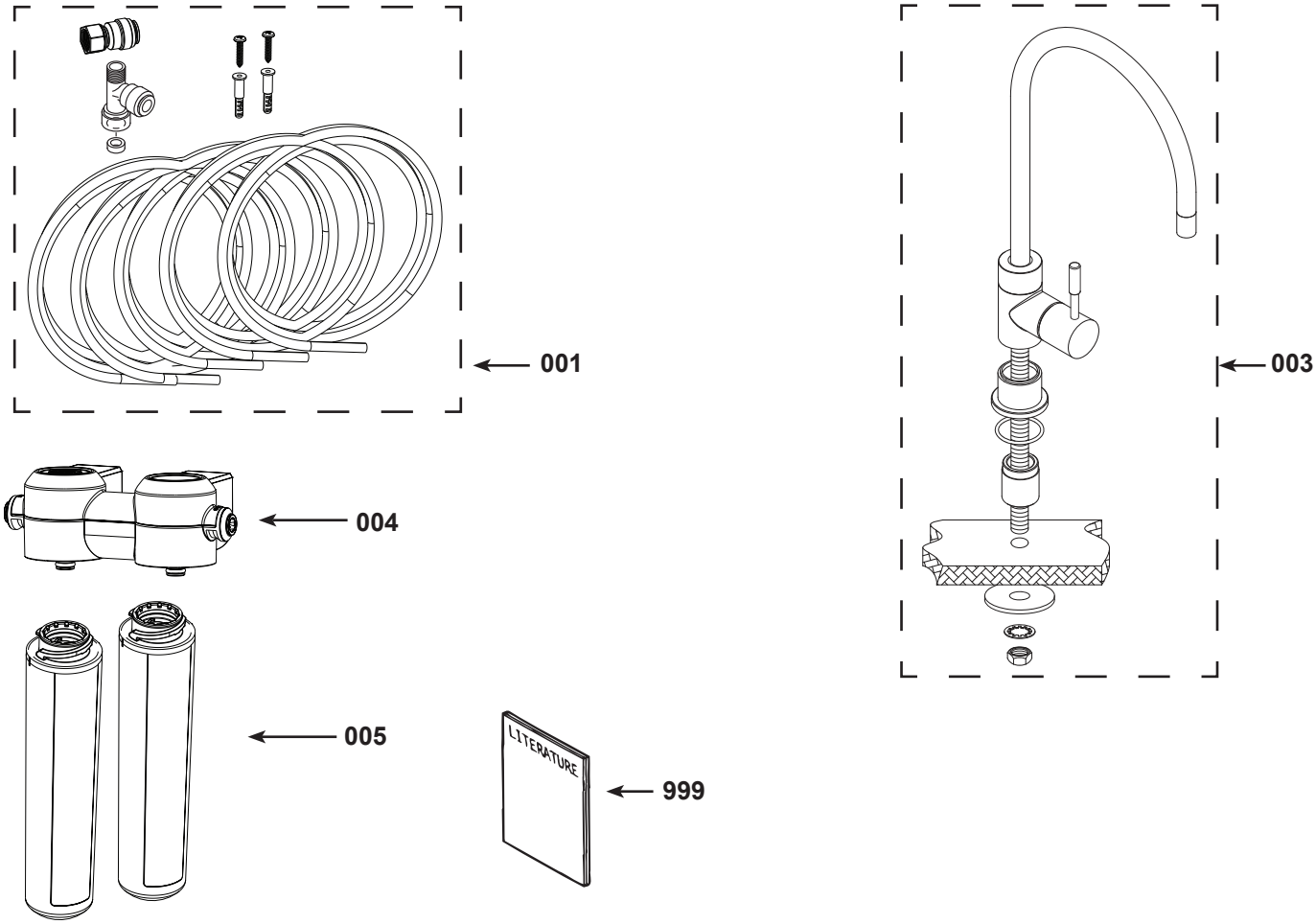


| Ref. No. | Part No. | Part Description | |
|---|---|---|---|
| 001 | WS07X23609 | 3/8” PE tube, blue | 1 |
| | WS07X23611 | 3/8” PE tube, yellow | 1 |
| | WS22X23610 | Water Supply Fitting | 1 |
| | WS22X23610 | 3/8” Faucet Connector | 1 |
| 003 | WS10X23546 | Faucet Assembly | 1 |
| 004 | WS19X21082 | Filtration Manifold | 1 |
| 005 | FQK2J | Filter Set | 1 |
| 999 | 31-6000260 | Owner’s Manual | 1 |

To obtain replacement parts, call toll-free 800.952.5039 (US)

# GE Appliances Water Filtration Limited Warranty



## LIMITED ONE-YEAR WARRANTY

- **What does this warranty cover?**
  - — Any defect in materials or workmanship in the manufactured product.
- **What does this warranty not cover?**
  - — Filter canisters after 30 days from date of purchase.
  - — Service trips to your home to teach you how to use the product.
  - — Improper installation, delivery or maintenance.
  - — Failure of the product if it is abused, misused, altered, used commercially or used for other than the intended purpose.
  - — Use of this product where water is microbiologically unsafe or of unknown quality, without adequate disinfection before or after the system.
  - — Damage to the product caused by accident, fire, floods or acts of God.
  - — **Incidental or consequential damage caused by possible defects with this appliance, its installation or repair.**
- **For how long after the original purchase?**
  - — One (1) year.
- **How do I make a warranty claim?**
  - — Return to the retailer from which it was purchased, along with a copy of the "Proof of Purchase." A new or reconditioned unit will be provided. This warranty excludes the cost of shipping or service calls to your home.

EXCLUSION OF IMPLIED WARRANTIES—Your sole and exclusive remedy is product exchange as provided in this Limited Warranty. Any implied warranties, including the implied warranties of merchantability or fitness for a particular purpose, are limited to one year or the shortest period allowed by law.

**This limited warranty is extended to the original purchaser and any succeeding owner for products purchased for home or office use within the USA. In Alaska, the warranty excludes the cost of shipping or service to your home or office.**

**Some states do not allow the exclusion or limitation of incidental or consequential damages. This warranty gives you specific legal rights, and you may also have other rights, which vary from state to state. To know what your legal rights are, consult your local or state consumer affairs office or your state's Attorney General.**

**Contact GE Appliances at 800-952-5039 (US)**

**For Purchases Made In Iowa:** This form must be signed and dated by the buyer and seller prior to the consummation of this sale.
This form should be retained on file by the seller for a minimum of two years.

### Buyer:

Name _____

Address _____

City _____ State _____ Zip _____

Signature _____ Date _____

### Seller:

Name _____

Address _____

City _____ State _____ Zip _____

Signature _____ Date _____

# Consumer Support

## GE Appliances Website

Have a question or need assistance with your appliance? Try the GE Appliances Website 24 hours a day, any day of the year! You can also shop for more great GE Appliances products and take advantage of all our on-line support services designed for your convenience. In the US: **GEAppliances.com**

## Parts and Accessories

Individuals qualified to service their own appliances can have parts or accessories sent directly to their homes (VISA, MasterCard and Discover cards are accepted). Order on-line today 24 hours every day.
In the US: **GEApplianceparts.com** or by phone at 800-952-5039 (US) during normal business hours.

**Instructions contained in this manual cover procedures to be performed by any user. Other servicing generally should be referred to qualified service personnel. Caution must be exercised, since improper servicing may cause unsafe operation.**

## Contact Us

If you are not satisfied with the service you receive from GE Appliances, contact us on our Website with all the details including your phone number, or write to:

In the US: General Manager, Customer Relations | GE Appliances, Appliance Park | Louisville, KY 40225
**GEAppliances.com/contact**



Printed in Taiwan

31-6000260 Rev. 3