SKU #1006596149, 1007256242, 1010747251, 1010840649, 1010840268, 1011054417, 1006596138, 1007256278, 1010747316, 1010840618, 1010840466, 1011096272, 1006596147, 1007256669, 1010747298, 1010840538, 1010840330, 1011096228, 1006596150, 1007256600, 1010747265, 1010840661, 1010840344, 1011096326, 1006596137, 1007256302, 1010747253, 1010840567, 1010840273, 1011096399, 1006596134, 1007256241, 1010747273, 1010840664, 1010840485, 1011096296, 1006596145, 1007256844, 1010747324, 1010840829, 1010840814, 1011096403, 1006867812, 1007256579, 1010747287, 1010840603, 1010840430, 1011096214, 1006867896, 1007256246, 1010747302, 1010840698, 1010840416, 1011096323, 1006867760, 1007256565, 1010747241, 1010840525, 1010840324, 1011096383, ...

Model #B12, B15, B18, B24, B30, B36, BBC36, B21, B27, B9, SL-B12, SL-B15, SL-B18, SL-B24, SL-B30, SL-B36, SL-BBC36, SL-B21, SL-B27, SL-B9

HAMPTON BAY®

USE AND CARE GUIDE

BASE CABINET, BLIND BASE CABINET (SHAKER/SLIM SHAKER)

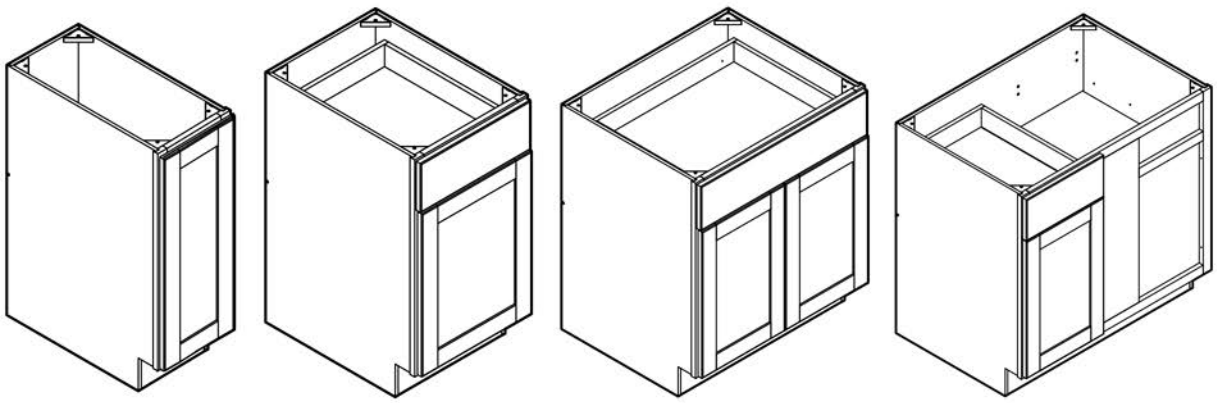

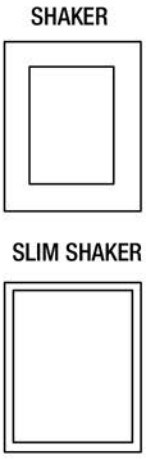

Questions, problems, missing parts? Before returning to the store, call Hampton Bay Customer Service
8 a.m. - 7 p.m., EST, Monday – Friday, 9 a.m. – 6 p.m., EST, Saturday

1-855-HD-HAMPTON

HAMPTONBAY.COM

THANK YOU

We appreciate the trust and confidence you have placed in Hampton Bay through the purchase of this base cabinet. We strive to continually create quality products designed to enhance your home. Visit us online to see our full line of products available for your home improvement needs. Thank you for choosing Hampton Bay!

Table of Contents

Safety Information 2
Warranty 2
Pre-Assembly 3
Before You Begin 3
Tools Required 3
Hardware Included. 3
Package Contents 4
Cabinet Assembly 5
Drawer Box Assembly 11
Completing the Assembly 15
Care and Cleaning 17

Safety Information

Please read and understand these instructions before you begin this assembly.

CALIFORNIA RESIDENTS

WARNING: This product can expose you to chemicals including Formaldehyde (GAS), which is [are] known to the State of California to cause cancer. For more information go to WWW.P65Warnings.ca.gov/products.

MINNESOTA RESIDENTS

IMPORTANT HEALTH NOTICE

SOME OF THE BUILDING MATERIALS USED IN THIS HOME (OR THESE BUILDING MATERIALS) EMIT FORMALDEHYDE. EYE, NOSE, AND THROAT IRRITATION, HEADACHE, NAUSEA AND A VARIETY OF ASTHMA-LIKE SYMPTOMS, INCLUDING SHORTNESS OF BREATH, HAVE BEEN REPORTED AS A RESULT OF FORMALDEHYDE EXPOSURE. ELDERLY PERSONS AND YOUNG CHILDREN, AS WELL AS ANYONE WITH A HISTORY OF ASTHMA, ALLERGIES, OR LUNG PROBLEMS, MAY BE AT GREATER RISK. RESEARCH IS CONTINUING ON THE POSSIBLE LONG-TERM EFFECTS OF EXPOSURE TO FORMALDEHYDE.

REDUCED VENTILATION MAY ALLOW FORMALDEHYDE AND OTHER CONTAMINANTS TO ACCUMULATE IN THE INDOOR AIR. HIGH INDOOR TEMPERATURES AND HUMIDITY RAISE FORMALDEHYDE LEVELS. WHEN A HOME IS TO BE LOCATED IN AREAS SUBJECT TO EXTREME SUMMER TEMPERATURES, AN AIR-CONDITIONING SYSTEM CAN BE USED TO CONTROL INDOOR TEMPERATURE LEVELS. OTHER MEANS OF CONTROLLED MECHANICAL VENTILATION CAN BE USED TO REDUCE LEVELS OF FORMALDEHYDE AND OTHER INDOOR AIR CONTAMINANTS.

IF YOU HAVE ANY QUESTIONS REGARDING THE HEALTH EFFECTS OF FORMALDEHYDE, CONSULT YOUR DOCTOR OR LOCAL HEALTH DEPARTMENT.

Warranty

Contact the Customer Service Team at 1-855-HD-HAMPTON or visit www.HAMPTONBAY.com.

Pre-Assembly

BEFORE YOU BEGIN

Compare all parts with the Hardware Included and Package Contents sections. If any part is missing or damaged, do not assemble this product. Contact Customer Service.

Assemble the cabinet on a soft surface such as carpet or the cardboard container of this product.

TOOLS REQUIRED

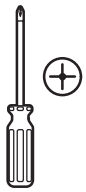

Phillips screwdriver

Rubber mallet

HARDWARE INCLUDED

NOTE: Hardware not shown to actual size.

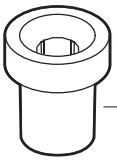

AA

BB

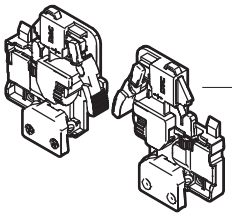

FF

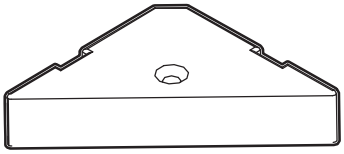

CC

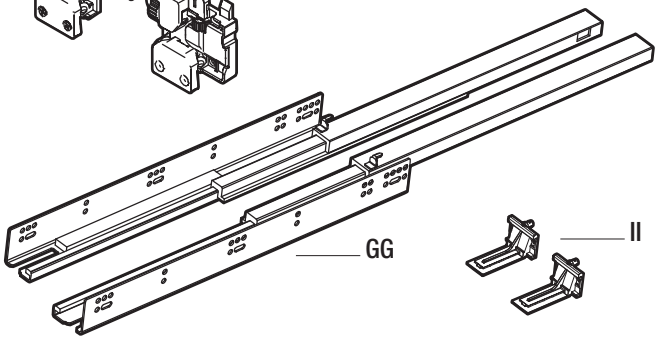

GG

II

DD

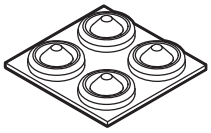

EE

HH

Blister Pack			
Part	**Description**	**Total Quantity**	**Extras***
AA	Posts	17	1
BB	#8 x 1 in. Screws (yellow)	34	4-9
CC	Corner Locks	8	0
DD	Shelf Pins	13	9
EE	Silicone Pads	10	2-4

* Extras quantity is based upon your cabinet size.

Drawer Glide Hardware**			
Part	**Description**	**Total Quantity**	**Extras***
FF	Drawer Glide Attachment	2	0
GG	Drawer Glides	2	0
HH	M4 x 15 mm Screws (silver)	12	2
II	Drawer Glide Holders	2	0

* Extras quantity is based upon your cabinet size.

** 9 in. Base cabinets do not have a drawer.

Pre-Assembly (continued)

PACKAGE CONTENTS

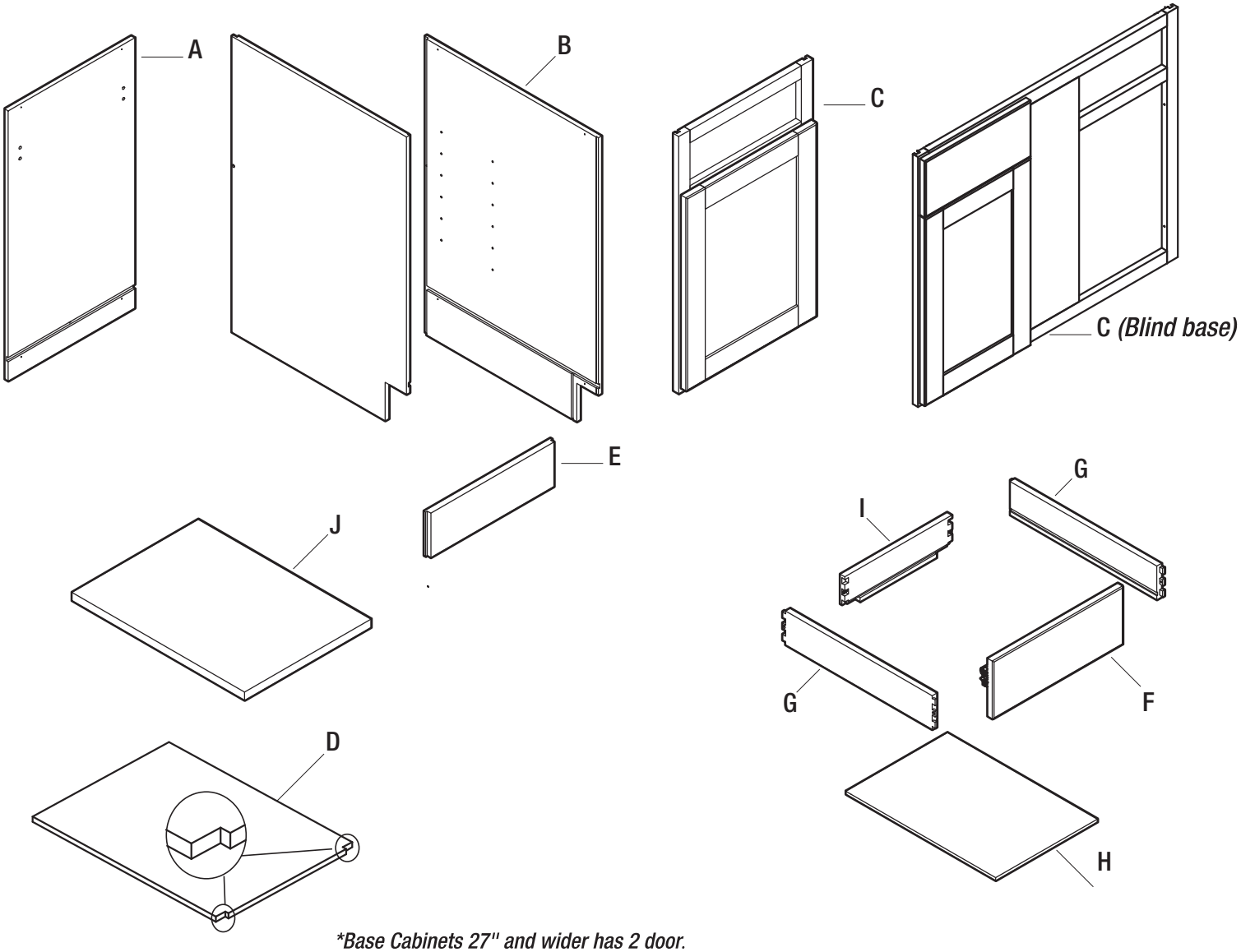

**Base Cabinets 27" and wider has 2 door.*

Part	Description	Quantity
A	Back Panel	1
B	Side Panels	2
C	Face Frame	1
D	Bottom Panel	1
E	Toe Kick	1
F	Drawer Front	1
G	Drawer Sides	2
H	Drawer Bottom	1
I	Drawer Back	1
J	Shelf	1

Cabinet Assembly

1 Attaching the posts to the panels

- ☐ Align four posts (AA) with pre-drilled holes on each of the panels and frame (A – C) and secure with four screws (BB) on each panel and frame (A – C).

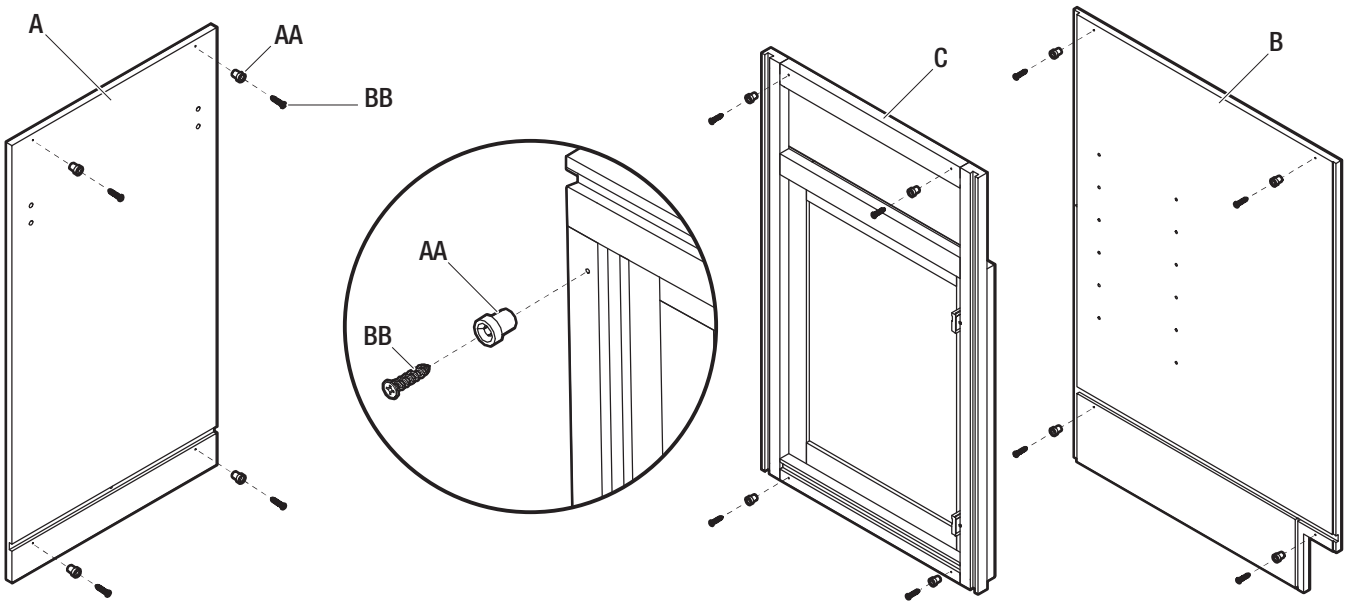

2 Installing the drawer glide holders to the back panel

- ☐ Install drawer glide holders (II) to the back panel (A) by inserting the holders (II) into holes in the back panel (A).
- ☐ Secure with two small screws (HH).

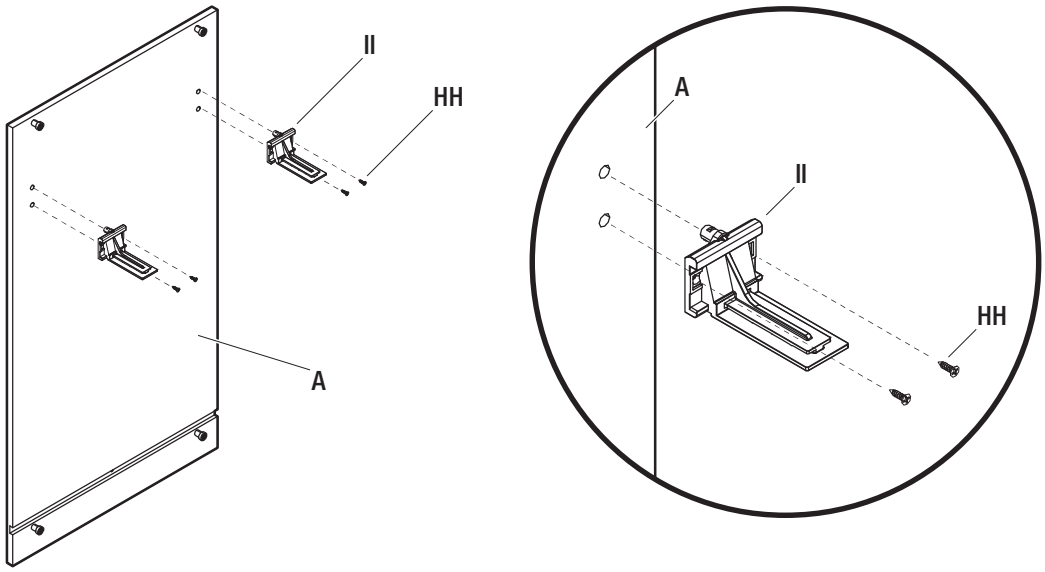

3 Attaching the side panels into the face frame

- Start by placing the face frame (C) flat on a smooth surface that will not scratch or damage the face of the cabinet, such as a towel or piece of cardboard (1) from the packaging with the door facing down. Slide the two side panels (B) into the mating grooves on the face frame (C).

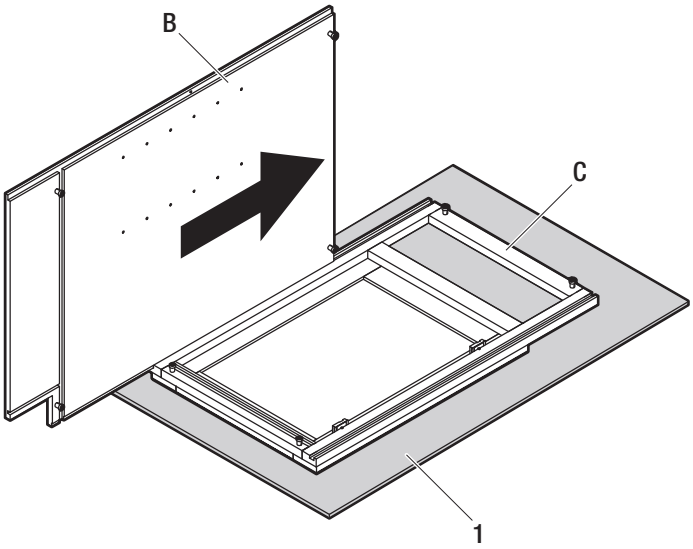

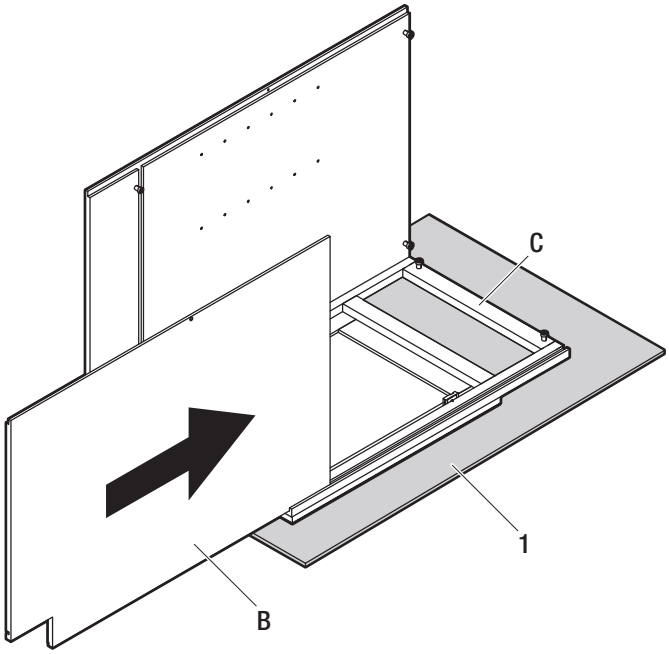

4 Attaching the bottom panel

- ☐ Slide the bottom panel (D) into grooves in the sides.
- ☐ Snap four corner locks (CC) over the posts to secure the face frame (C) and side panels (B) as shown. At the top of the cabinet, the smooth face of each corner lock (CC) should be facing out.

NOTE: If installing a laminate countertop, the smooth face of each corner lock (CC) should be facing the inside of the cabinet.

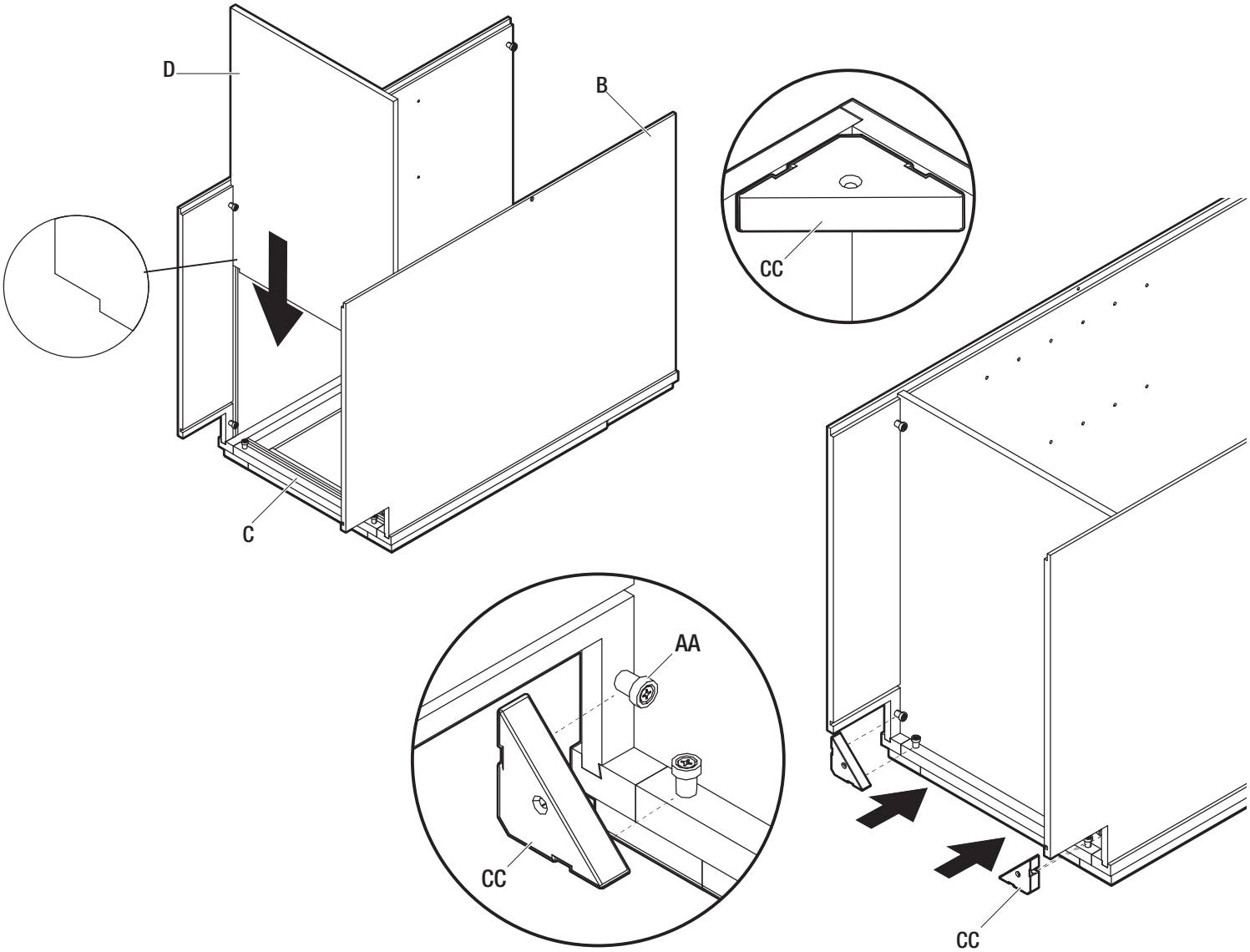

5 Attaching the back panel

- Assemble the back panel (A) and the four remaining corner locks (CC).

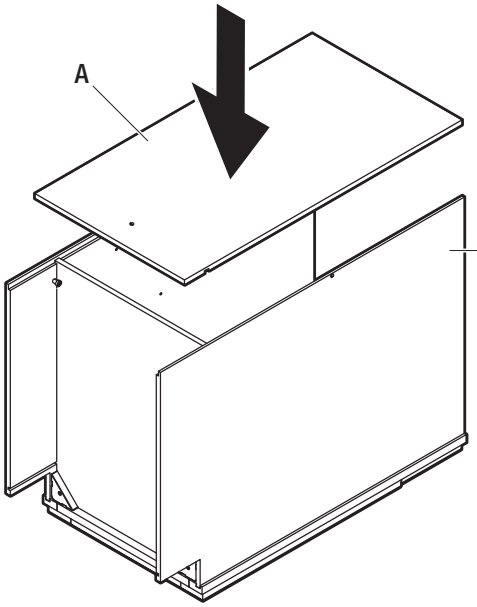

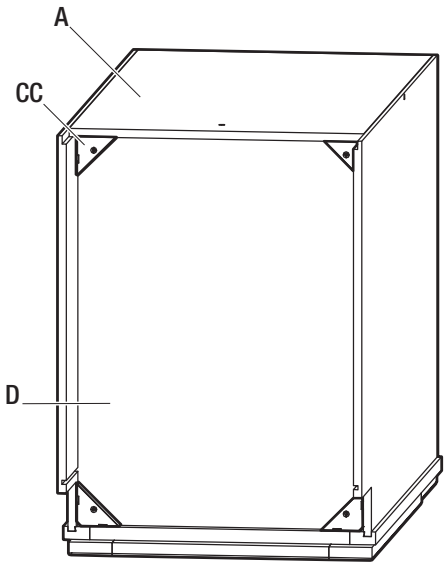

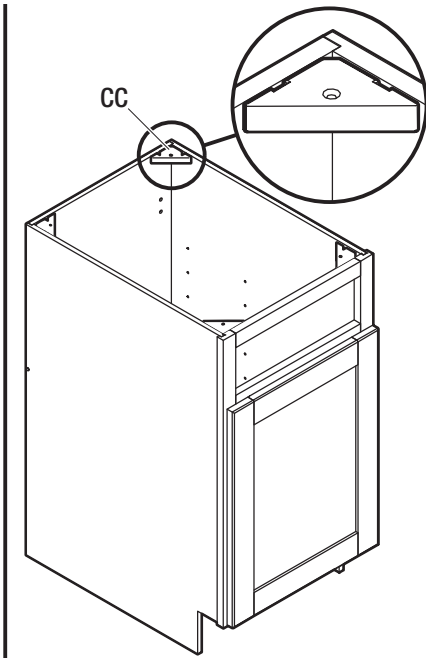

NOTE: If installing on a laminate countertop, orient the smooth face of each top corner lock (CC) in the opposite direction. Bottom corner lock assembly will be the same for all countertop types.

- If installing a laminate countertop, the top four corner locks (CC) should be oriented as shown below. From inside of the cabinet, screw through the corner locks (CC) into the bottom of the countertop to secure into place.

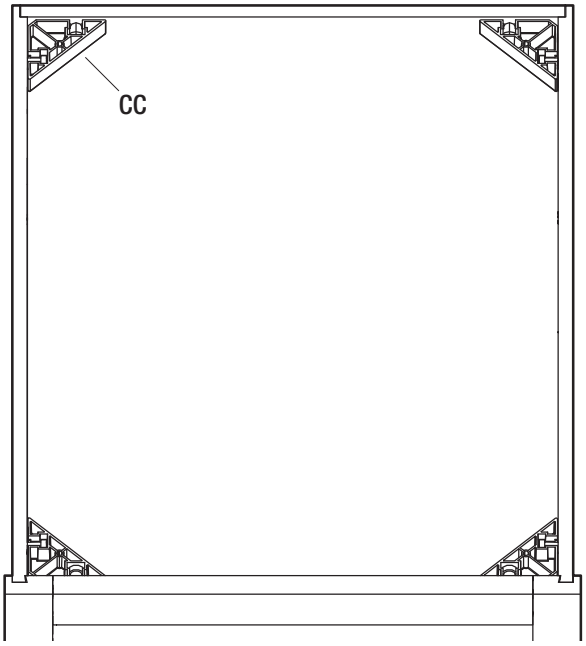

- For all other countertop types, the top four corner locks (CC) should look like this.

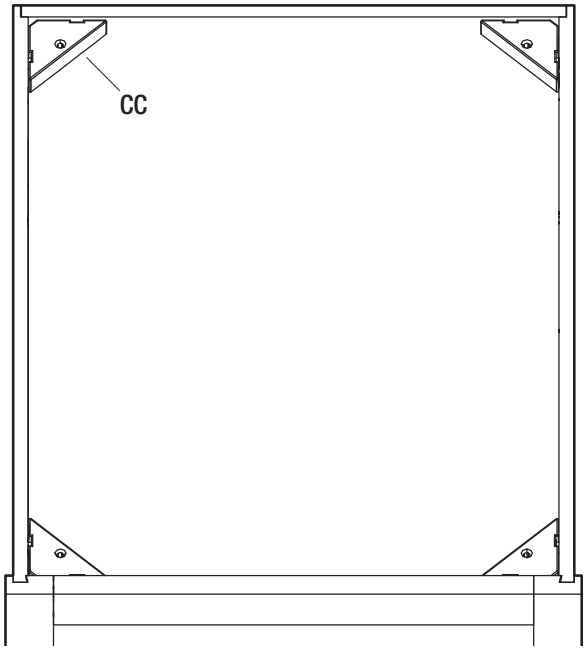

6 Securing the bottom corner locks

- ☐ Insert a screw (BB) through each hole in the bottom four corner locks (CC), and screw into the bottom panels.

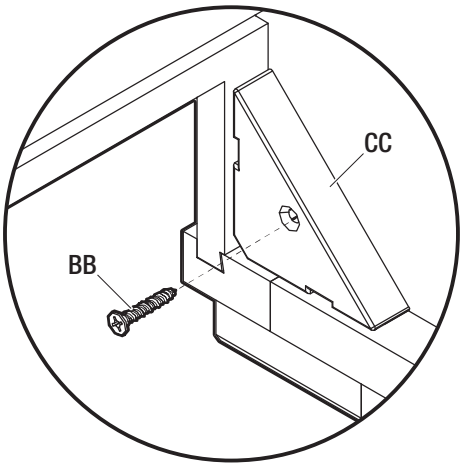

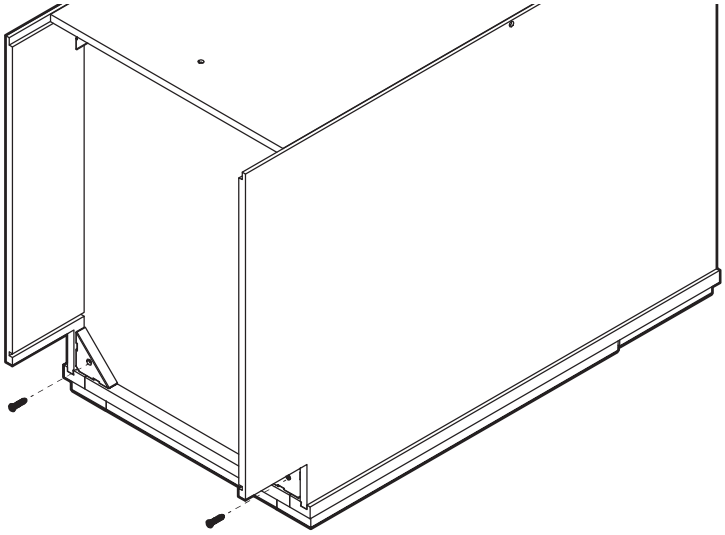

7 Attaching the toe kick

- ☐ Slide the toe kick (E) into the grooves of the side panels (B) so that it sits flush with the bottom of the cabinet.
- ☐ Insert two screws (BB) into the pocket holes to secure the toe kick (E) to the sides.

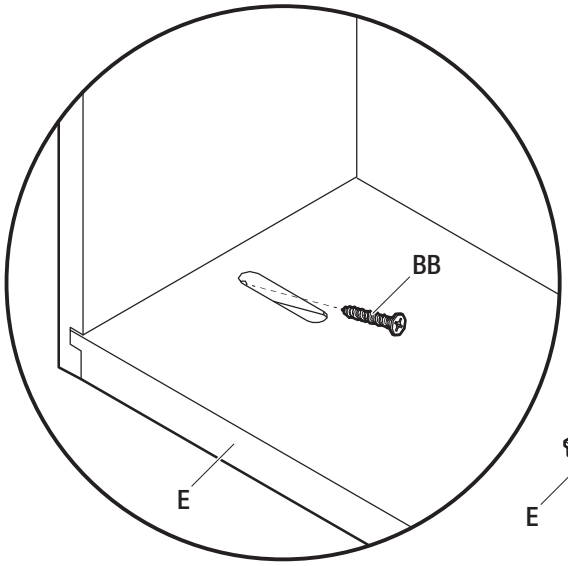

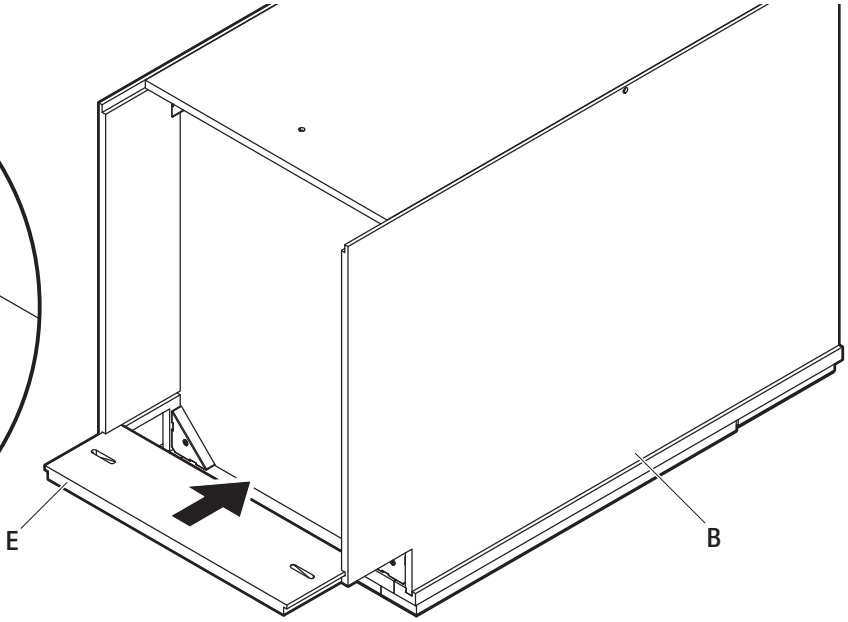

8 Securing the back and side panels

- ☐ Insert screws (BB) into countersunk holes in the back (A) and side panels (B).
- ☐ Proceed to the Drawer Box Assembly section.

NOTE: Base cabinets 27 in. and wider will have two holes through the back, all other sizes will have one.

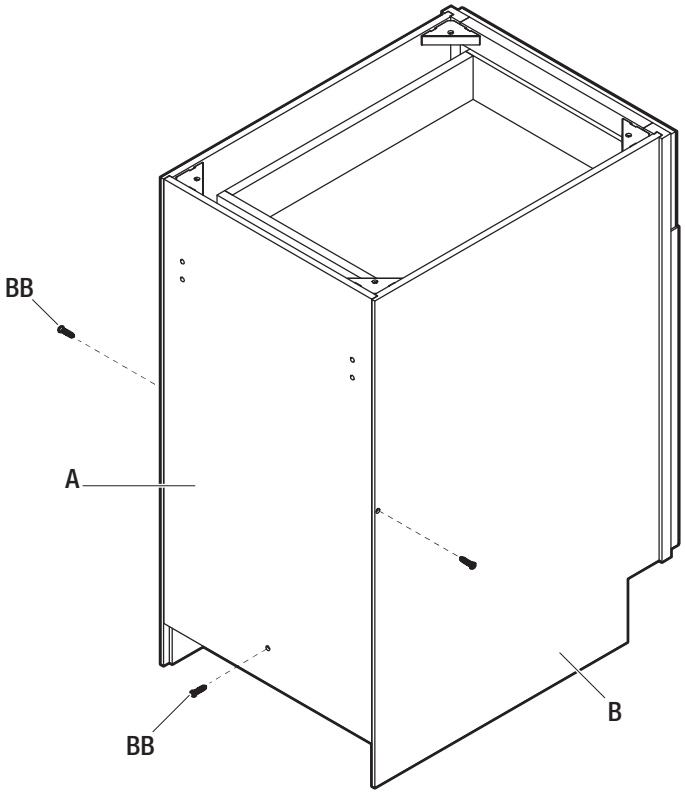

Drawer Box Assembly

1 Attaching the drawer sides

- ☐ Place the drawer front (F) face down on a smooth surface that will not scratch or damage the face of the drawer, such as a towel or piece of cardboard (1) from the packaging.
- ☐ Use a rubber mallet to tap the drawer sides (G) into place on the drawer front (F).
- ☐ Insert a screw (BB) into the countersunk holes on each side, and partially tighten.

NOTE: It is important that you only partially tighten the screws in order to avoid cracking.

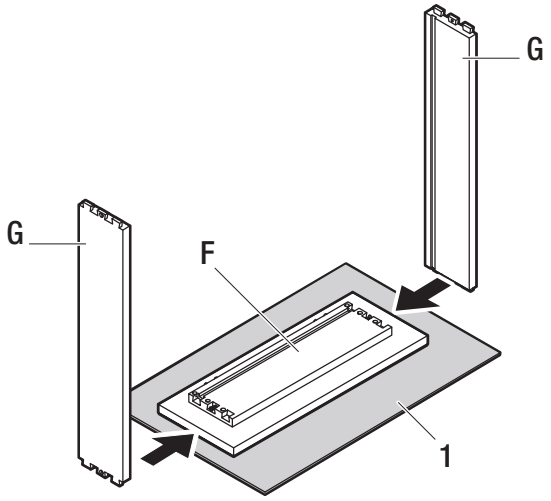

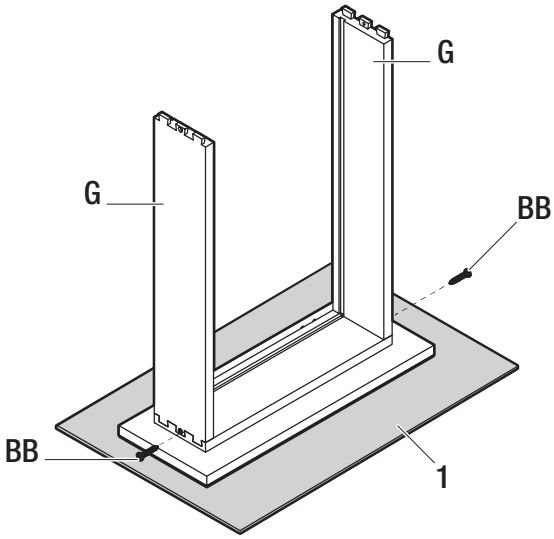

2 Attaching the drawer bottom

- ☐ Slide the drawer bottom (H) into the groves on the sides of the drawer assembly.

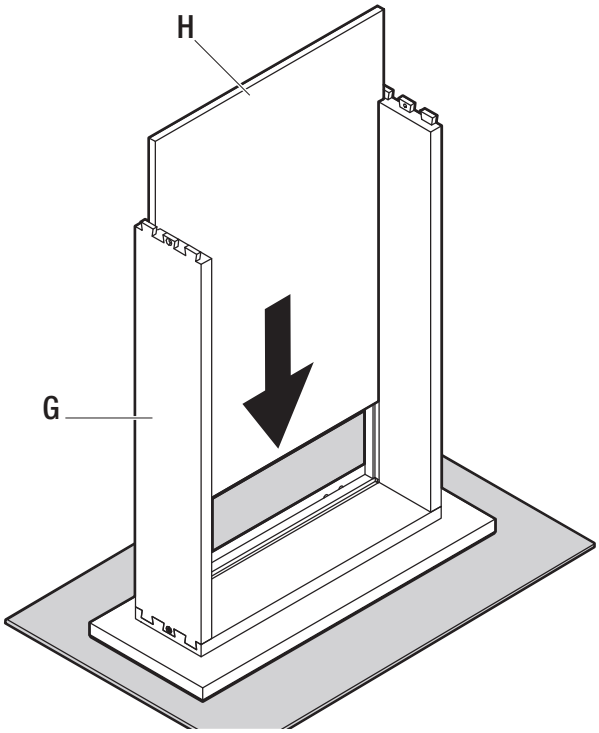

Drawer Box Assembly (continued)

3 Attaching the drawer back

- ☐ Use a rubber mallet to tap the drawer back (I) into place. To fit the drawer back on, drawer sides will have to flex outwards slightly.
- ☐ Insert two more screws (BB) into the countersunk holes on each side. Fully tighten all four screws.

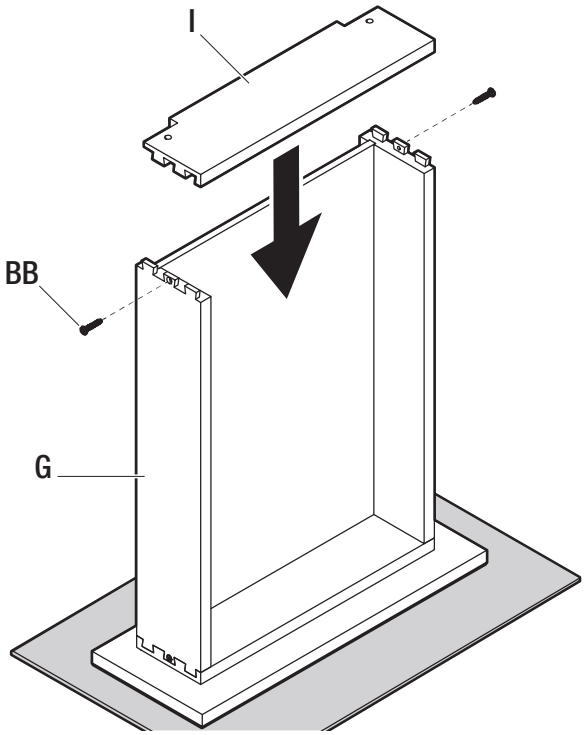

4 Attaching the drawer glide attachments

- ☐ Install two drawer glide attachments (FF) to the drawer. Secure each attachment in place with the screws (HH) packaged with the drawer glide attachments (FF). Make sure each glide attachment (FF) is secured fully underneath each corner.

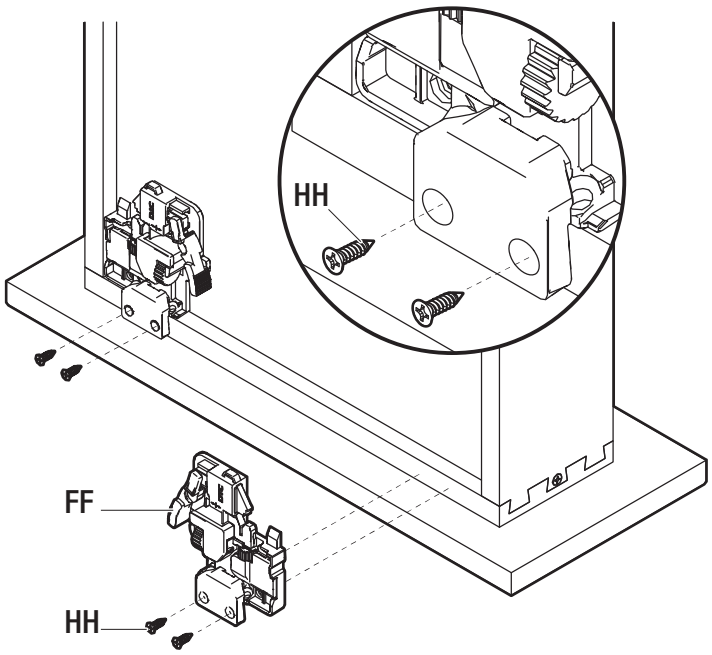

5 Attaching the drawer glides

- ☐ Install the drawer glides (GG) by sliding them into the drawer glide holders (II). Pull the drawer glides (GG) out until the front reaches the face frame and secure with a screw (HH).

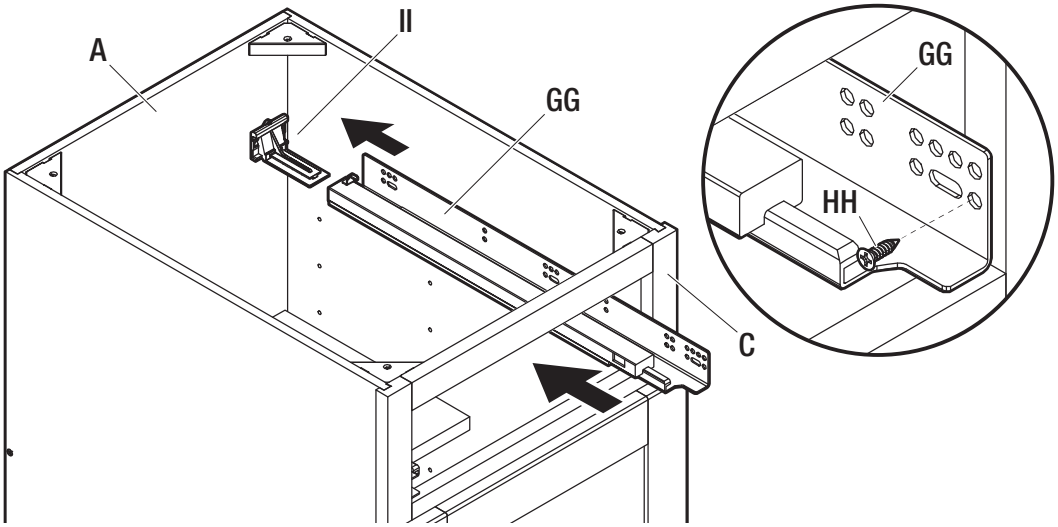

6 Installing the drawer

- ☐ Ensure the drawer glides are pulled out/fully extended.
- ☐ Align the drawer with the glides and then click and slide into place. Additionally, the holes in the back of the drawer need to align with the metal prong, as shown.

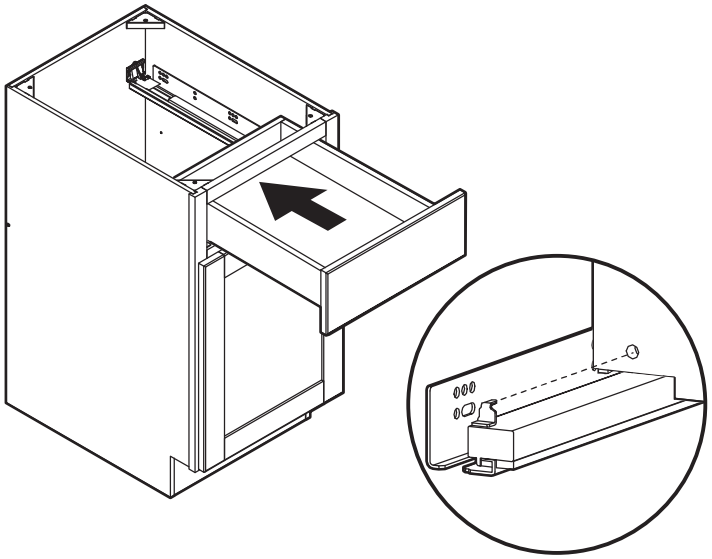

7 (OPTIONAL) Adjusting the drawer front

- ☐ Drawer fronts can be adjusted by turning the knobs on drawer glide attachments. Drawer fronts can be moved left, right, up, and down on each side until they are level.

NOTE: Do not complete this step until the cabinet is fully installed.

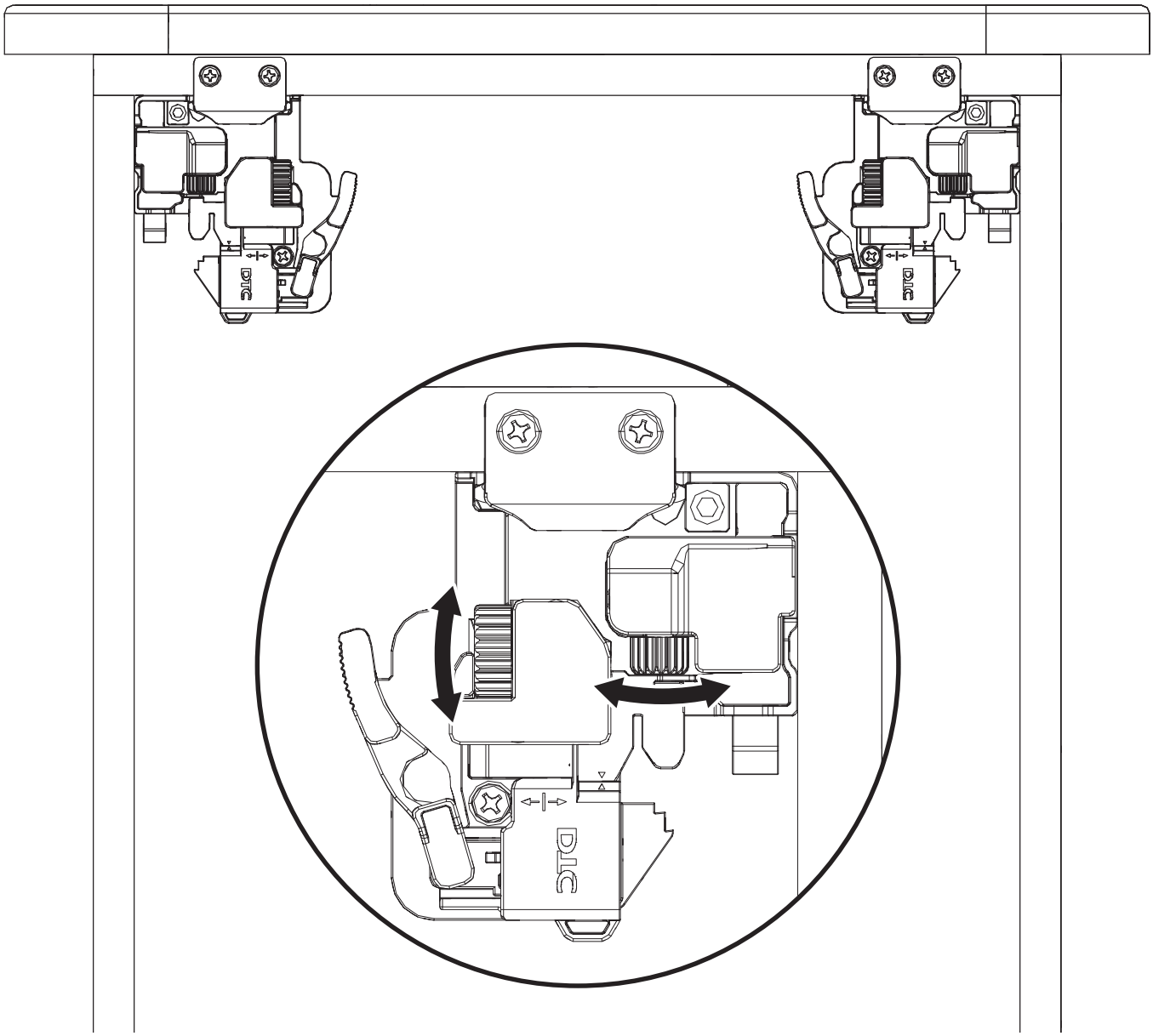

Completing the Assembly

1 Attaching silicone pads

- Peel and stick two silicone pads (EE) onto the inside corners of each door and four for each drawer.

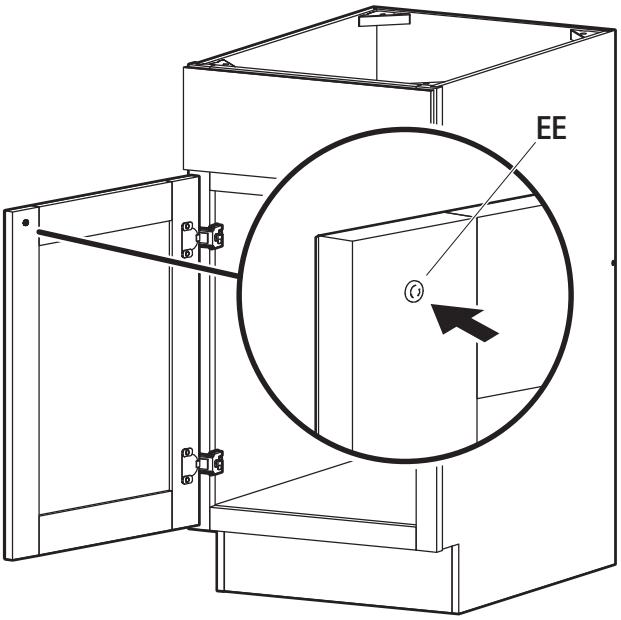

2 (OPTIONAL) Reversing the door position

- You can remove and reposition the door to the other side of the face frame at any time using the pre-drilled holes. For pre-drilled holes that are not used, you can cover them up using a wax pencil or touch-up paint pen.

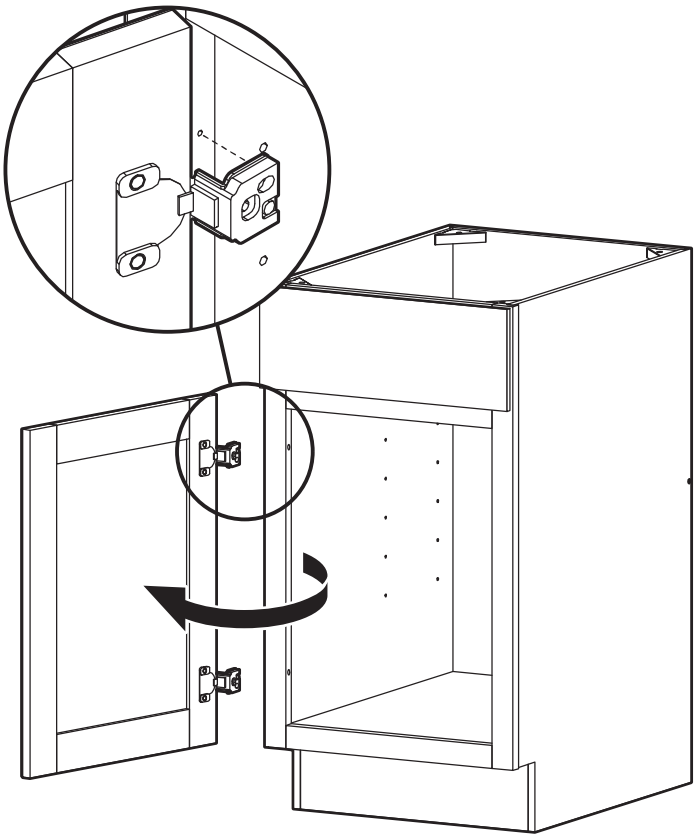

3 (OPTIONAL) Adjusting the door

- □ Door hinges are 6-way adjustable.
- □ Up or down adjustment – Loosen screw 1, align the door, and tighten screw 1.

NOTE: It is critical that you do NOT overtighten screw 1.

- □ Left or right adjustment – Turn screw 2 clockwise or counterclockwise.
- □ In or out adjustment – Turn screw 3 clockwise or counterclockwise.

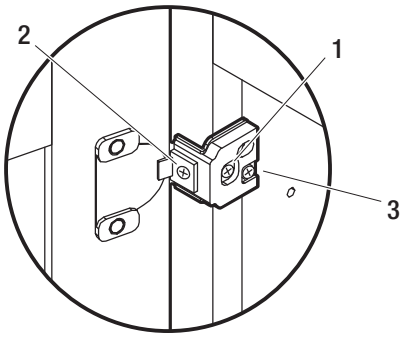

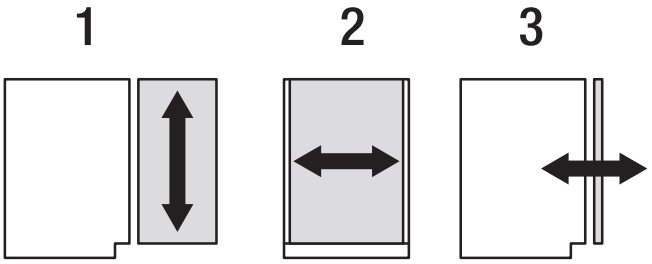

4 Installing the shelves

- □ Place the shelf pins (DD) inside the assembly at the desired locations using the pre-drilled holes.
- □ Tilt the shelves (E) to fit inside the face frame and snap over the shelf pins (DD).
- □ To remove the shelves, push the tabs (1) on the shelf pins and lift the shelf.

NOTE: Do not install shelves until the cabinet assembly has been fully installed.

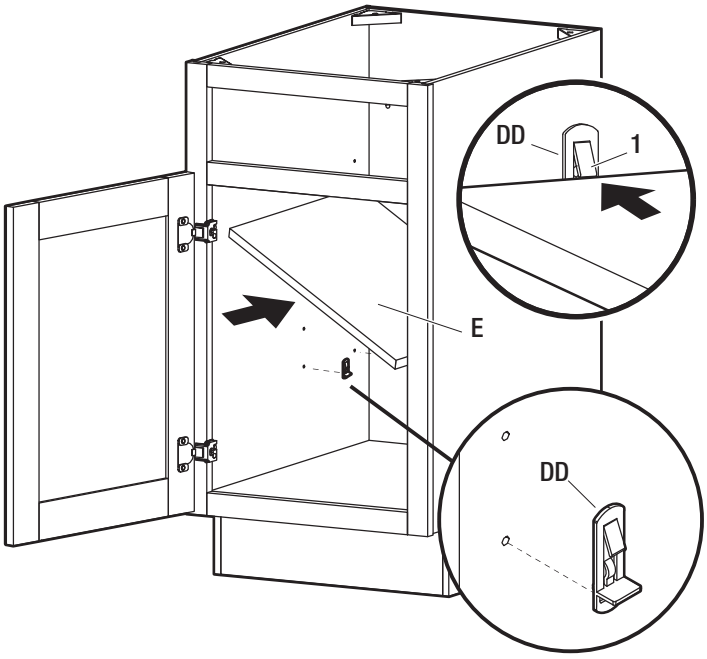

Blind Base Cabinet Installation

- Drawer, door, cover panel can be switched between Left/Right by removing the screws of the slides, hinge, cover panel, then assembling them on the other side and screwing them back.

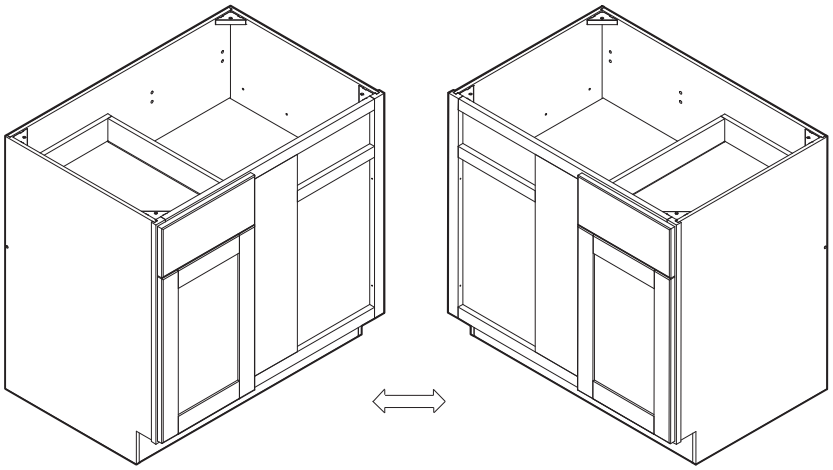

- The blind corner needs to be installed approximately 5"-6” away from the wall to prevent the drawer and door of the corner unit from interfering with adjacent cabinets.
- Leave 5-6" space between the corner unit and another unit on the opposite side and fill it with a filler such as F630 (**not provided**).

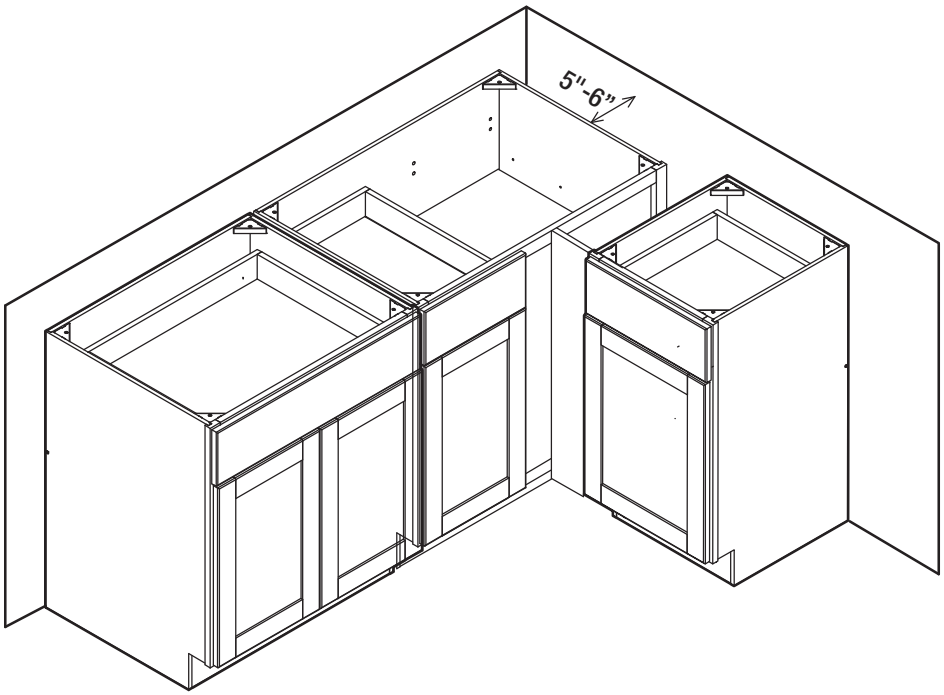

Care and Cleaning

- For normal spills, a damp cloth is sufficient. Dry the surface immediately.
- Doors can be cleaned with most general purpose household cleaners.
- Do not use caustic agents and/or abrasive scrubbers, or oven cleaners.
- Cabinets can be cleaned with a damp sponge or cloth using soapy water, or most general purpose household cleaners. Do not use any abrasive cleaner or scrubbers.
- Do not allow liquids to remain on the surfaces for long periods of time.

HAMPTON BAY®

Questions, problems, missing parts? Before returning to the store,
call Hampton Bay Customer Service
8 a.m. – 7 p.m., EST, Monday – Friday, 9 a.m. – 6 p.m., EST, Saturday

1-855-HD-HAMPTON

HAMPTONBAY.COM

Retain this manual for future use.