Replacement Parts List

Constructor 2-Handle Standard Kitchen Faucet

Internet#	MODEL	SKU #	FINISH
324555867	HD67099-0B10H	1009352702	Matte Black

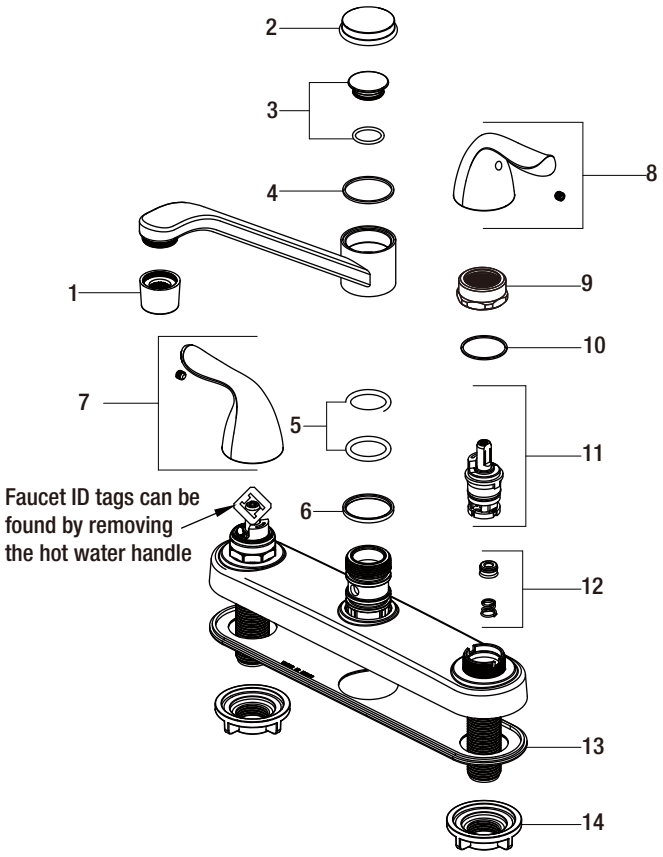

Many replacement parts can be purchased online or at your local store. Please use the table below to identify the part SKU number needed, go to HOMEDEPOT.COM, and check for online and store availability. If you can't find the part you are looking for, please call 1-855-HD-GLACIER.

Part	Description	Part #	Internet SKU #	Store SKU #
1	Aerator	RP3013310H		
2	Cap	RP8017310H		
3	Washer & O-ring	RP70427		
4	Washer	RP64100		
5	O-ring	RP60006		
6	Washer	RP64129		
7	Handle assembly H	RP1359010H		

Part	Description	Part #	Internet SKU #	Store SKU #
8	Handle assembly C	RP1359110H		
9	Bonnet nut	RP70678		
10	Washer	RP64124		
11	Cartridge	RP50168		
12	Seat & Spring	RP22008		
13	Gasket	RP70419		
14	Mounting nut	RP56001	203193994	579276