# TRANSITIONAL PULL-DOWN KITCHEN FAUCET

Specifications

**FOR MODEL NUMBER**

CA6112SS CA6112CP

## FAUCET DIMENSIONS

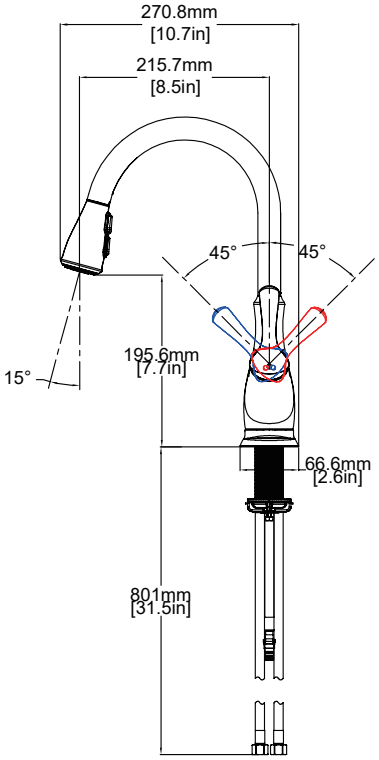


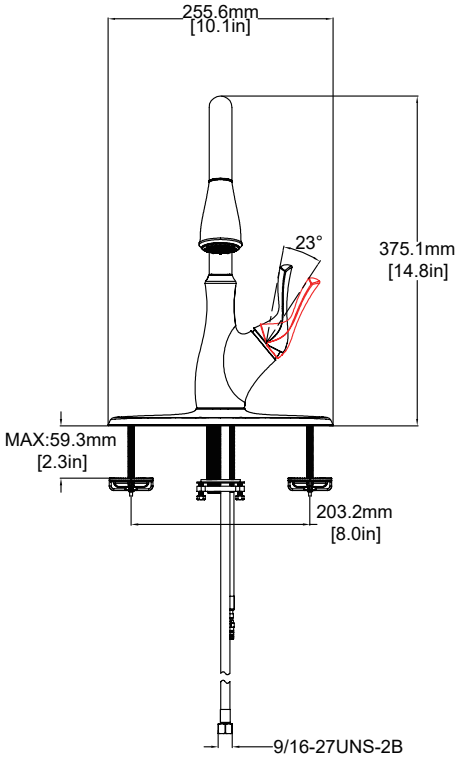


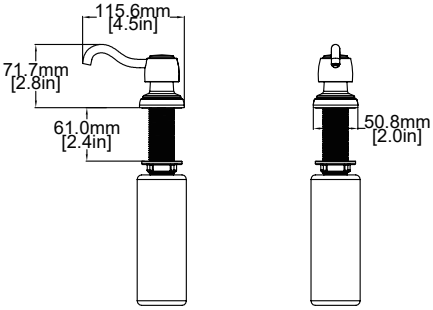


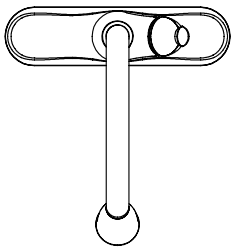

**FOR WARRANTY ISSUES OR QUESTIONS, CONTACT CAHABA AT (866) 837-2550.**

©2017 CAHABA. ALL RIGHTS RESERVED.