INSTALLATION
Product Manual

Version: 330075-01-24A-XD

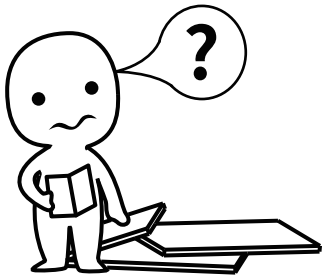

IMPORTANT INFORMATION!

please read the entire manual before starting to assemble and/or using this product.follow the manual thoroughly and keep it for further reference.

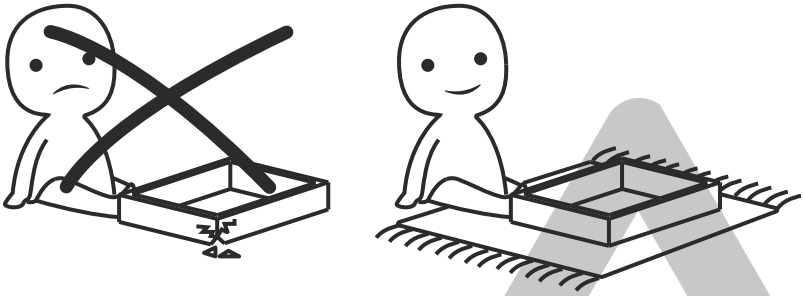

AVOID SCRATCHES!

In order to avoid scratching this furnuture should be assembled on a soft layer-could be a rug.

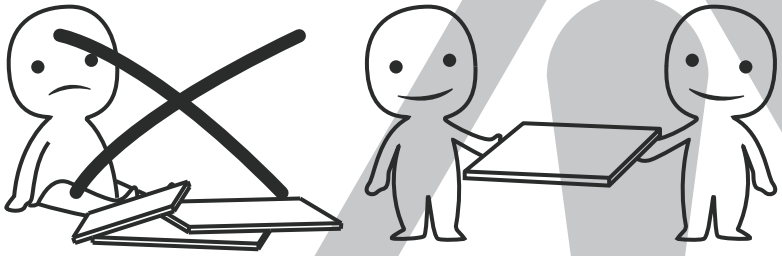

IMPROVE EFFICIENCY !

Try to find a partner to install with you, which can speed up the installation efficiency and shorten the time.

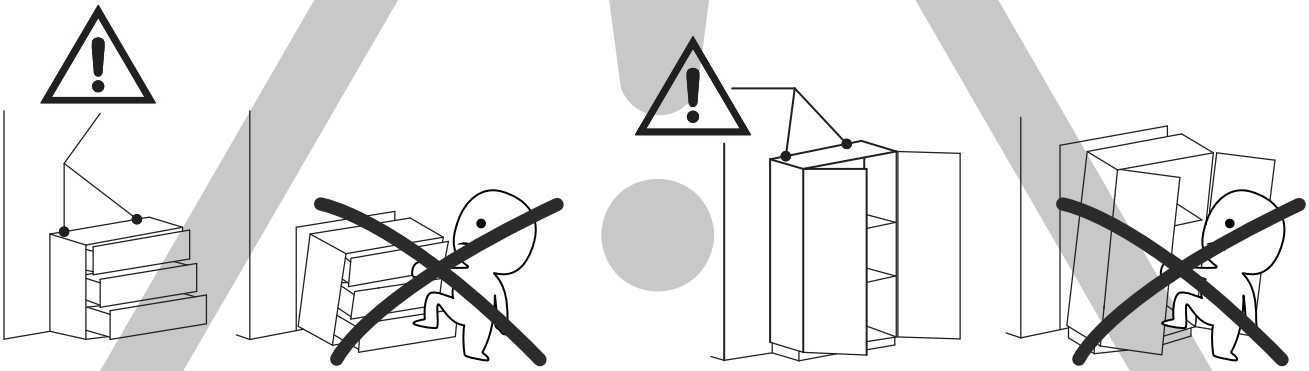

ANTI-TOPPLE WARNING !

Overturned furniture can cause serious or fatal crush injuries. To prevent tipping over, be sure to use the wall attachment, if not included with this product. Please purchase the wall attachment that fit your wall. If unsure, seek professional advice. Please read and follow each step of the instructions carefully.

IMPORTANT !

It is important that any product which is assembled using any kind of screw is re-tightened 2 weeks after assembly,and once every 3 months - in order to assure stability through-out the lifespan of the product.

For regular maintenance and cleaning of the product, for the frame, please use a rag dipped in neutral detergent to fully wipe it, and then dry it with a clean rag.For glass materials, wipe with a rag dampened with water glass cleaner, and then dry with a dry rag.

Do not use an electric screwdriver, and do not use too much force when installing, because the board is easy to break.

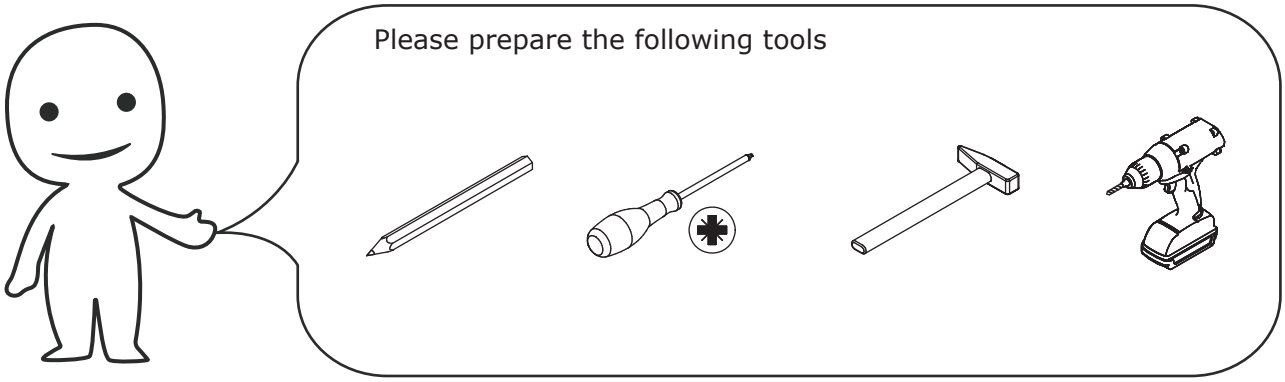



When installing, please carefully confirm whether each screw corresponds to the manual, accessories with similar shapes can be distinguished by size

A x 28+3	B x 94+4	C x 94+4	D x 2	E x 4
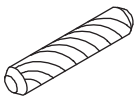	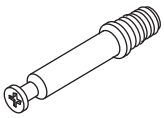 ∅6 x 35 mm	 ∅15 x 10 mm	 ∅4 x 12 mm	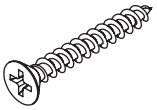 ∅5 x 40 mm

F x 9+1	G x 9	H x 108+4	J x 1	K x 56+4
 ∅4 x 14 mm		 ∅3 x 12 mm		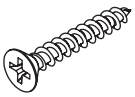 ∅4 x 35 mm

L x 14	M x 14+1	N x 2+1	P x 2	Q x 2
	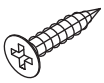 ∅3 x 14 mm	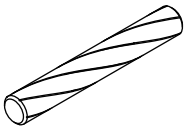 ∅4 x 50 mm	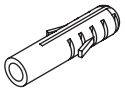	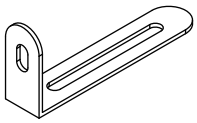

CL x 9	CR x 9	DL x 9	DR x 9
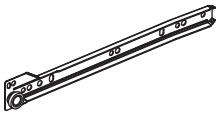		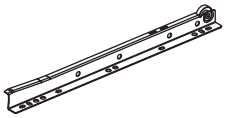	

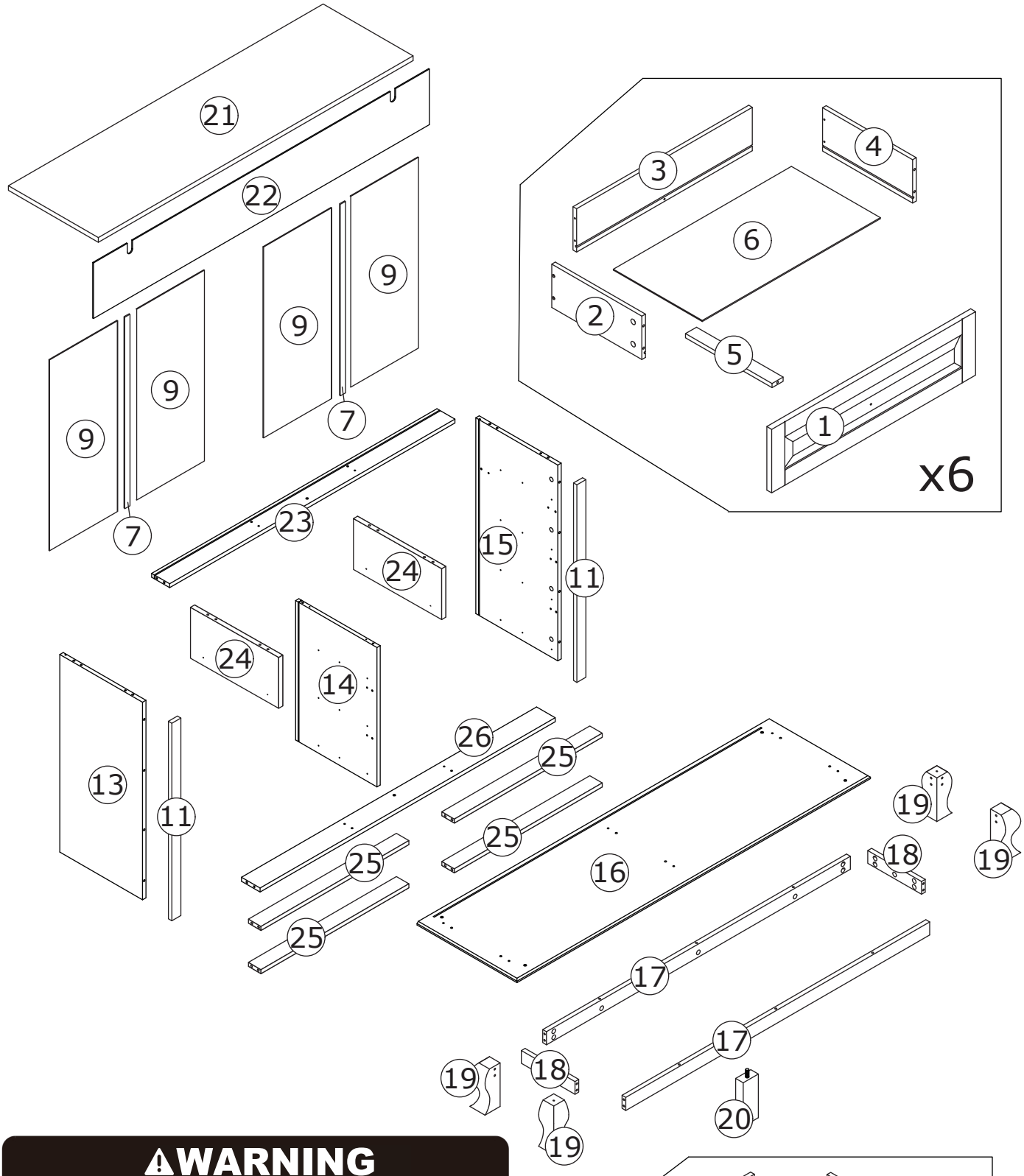

⚠WARNING

Children have died from furniture tipover.To reduce the risk of furniture tipover:

- ALWAYS install Anti-tip device provided.
- NEVER put a TV on this product.
- NEVER allow children to stand,climb or hang on drawers,doors,or shelves.
- NEVER open more than one drawer at a time.
- Place heaviest items in the lowest drawers.

This is a permanent label.
Do not remove!

1 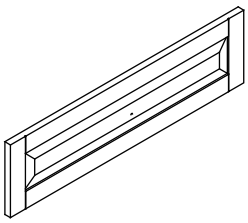 6PCS	2 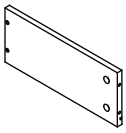 9PCS	3 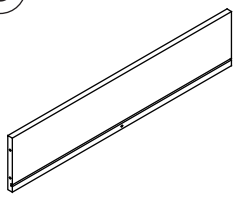 6PCS	4 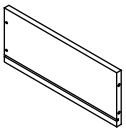 9PCS
5 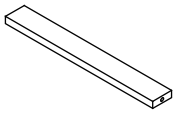 6PCS	6 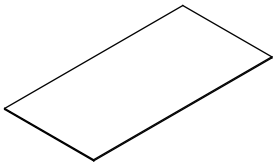 6PCS	7  2PCS	8 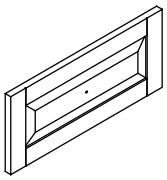 3PCS
9 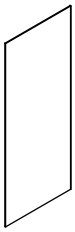 4PCS	10 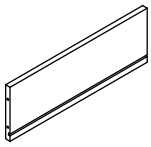 3PCS	11  2PCS	12 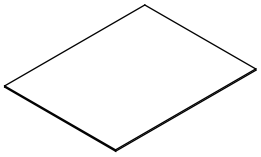 3PCS
13 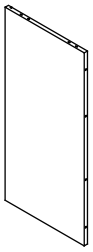 1PC	14 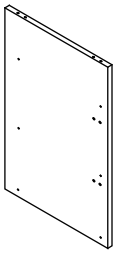 1PC	15 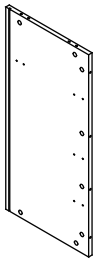 1PC	16 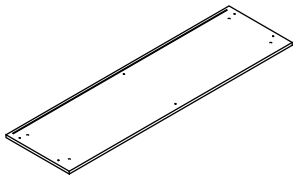 1PC
17 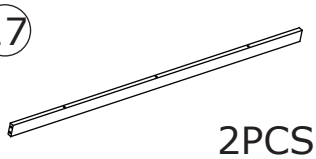 2PCS	19  4PCS	21 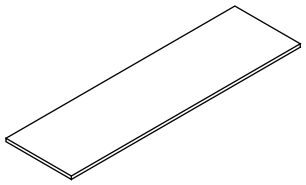 1PC	22 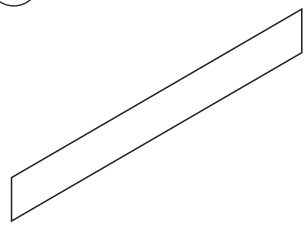 1PC
18  2PCS	20  1PC		
23 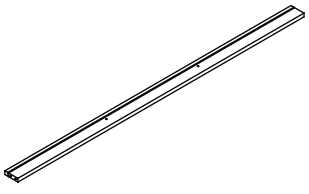 1PC	24 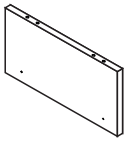 2PCS	25 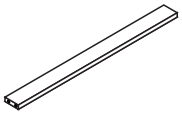 4PCS	26 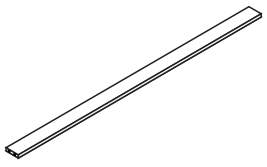 1PC

1

B x 42	F x 9	G x 9	
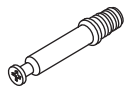			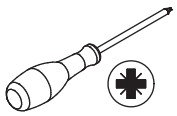
∅6 x 35 mm	∅4 x 14 mm		

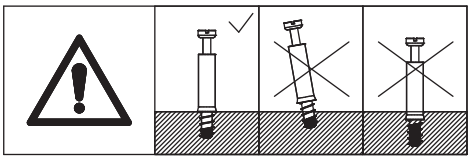

Screw eccentric rod(B) into board 1 and 8 as shown.
Fix knob(G) to board 1 and 8 with screw(F).

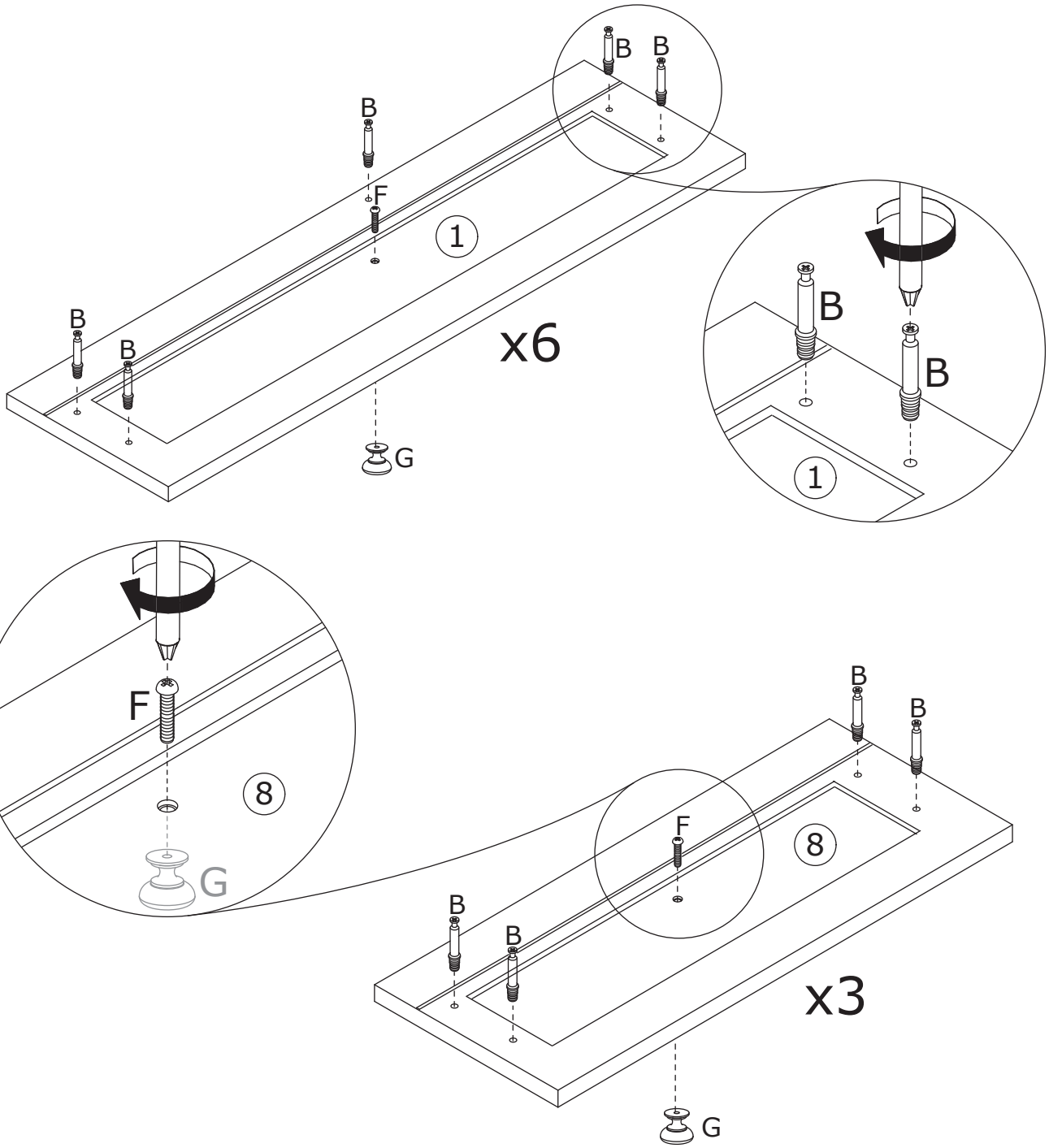

2

K x 42

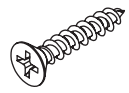

∅4 x 35 mm

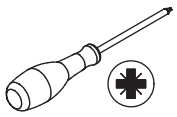

E

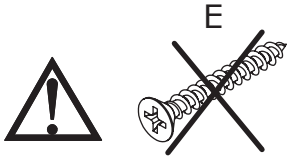

∅5 x 40 mm

K

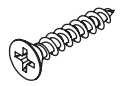

∅4 x 35 mm

Fix board 2 and 4 to board 10 with screw(K) at first.

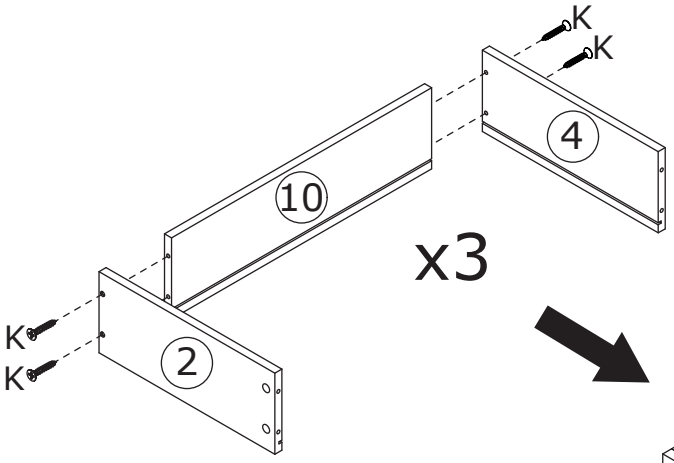

Insert board 12 along grooves as shown.

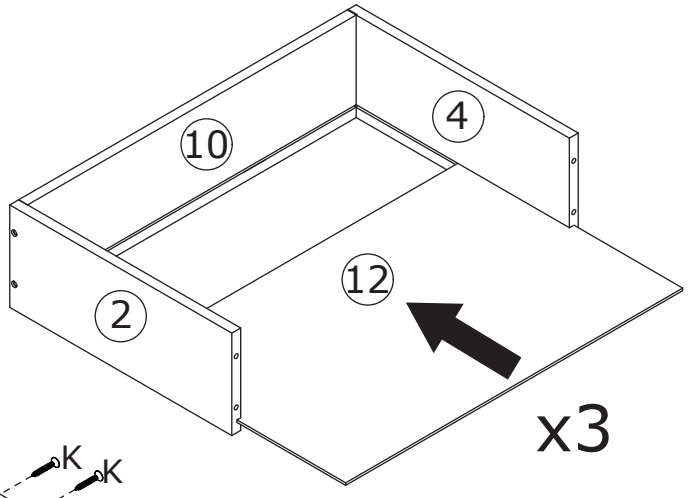

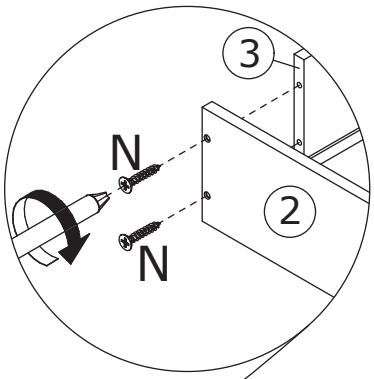

Fix board 2 and 4 to board 3 with screw(K) at first.

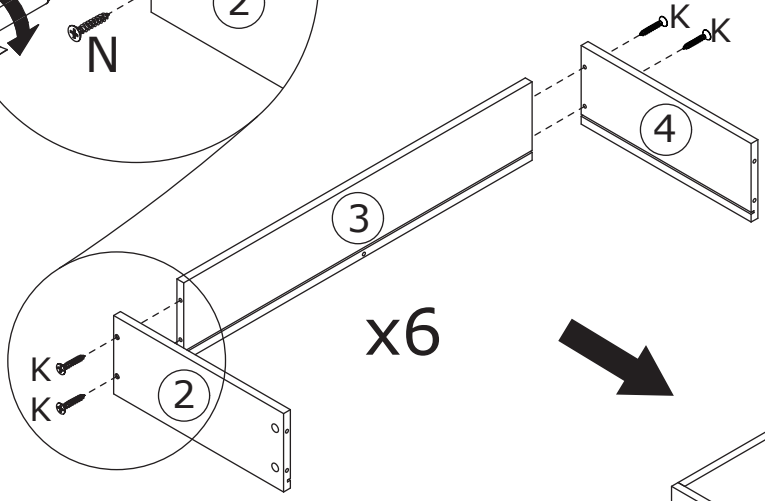

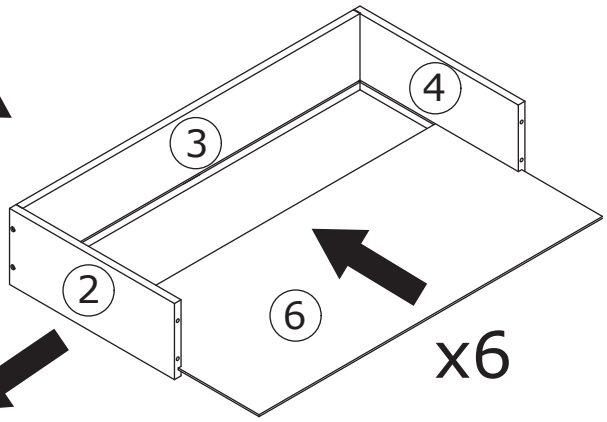

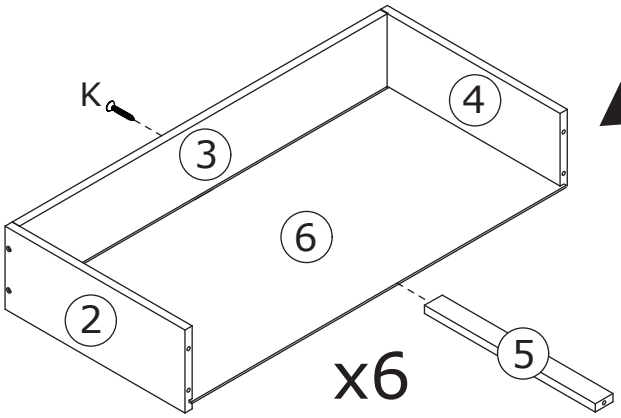

Insert board 6 along grooves, fix board 5 to board 3 with screw(K) as shown.

3

C x 30



∅15 x 10 mm

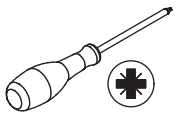

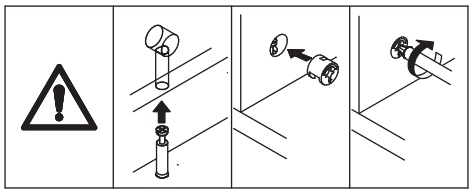

Attach board 1 to board 2, 5 and 4,
add cam lock(C) into board 2,5,4
and turn clockwise to tighten as shown.

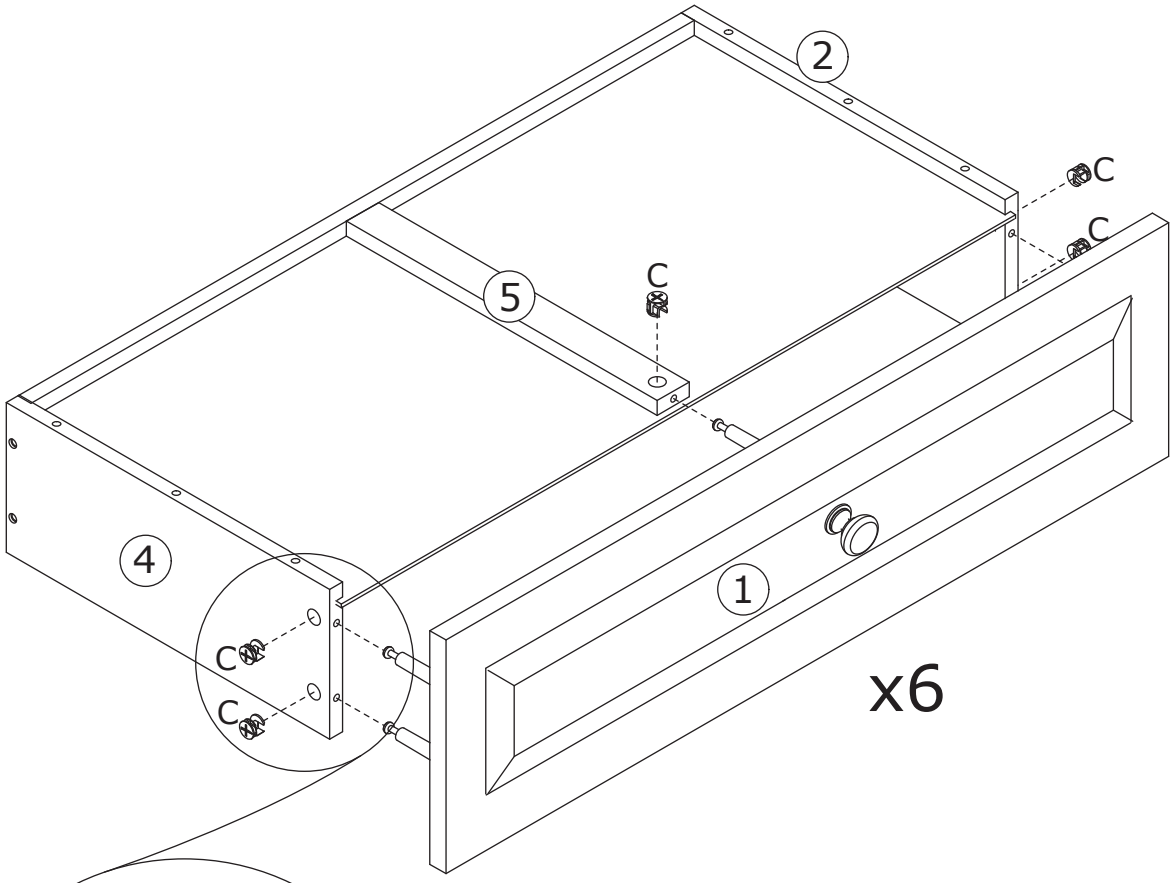

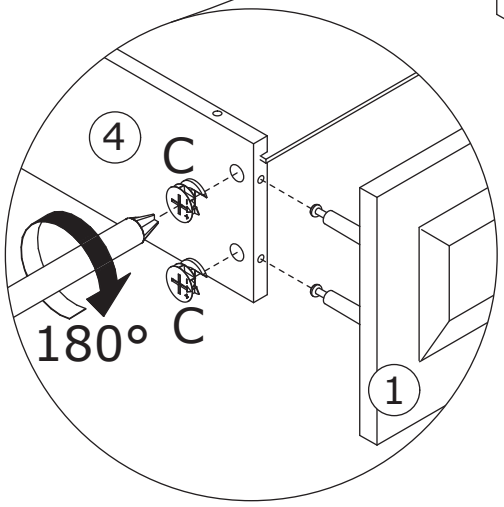

4

C x 12



∅15 x 10 mm

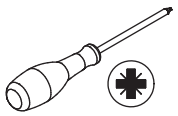

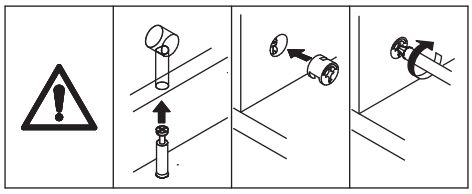

Attach board 8 to board 2 and 4,
add cam lock(C) into board 2,4
and turn clockwise to tighten as shown.

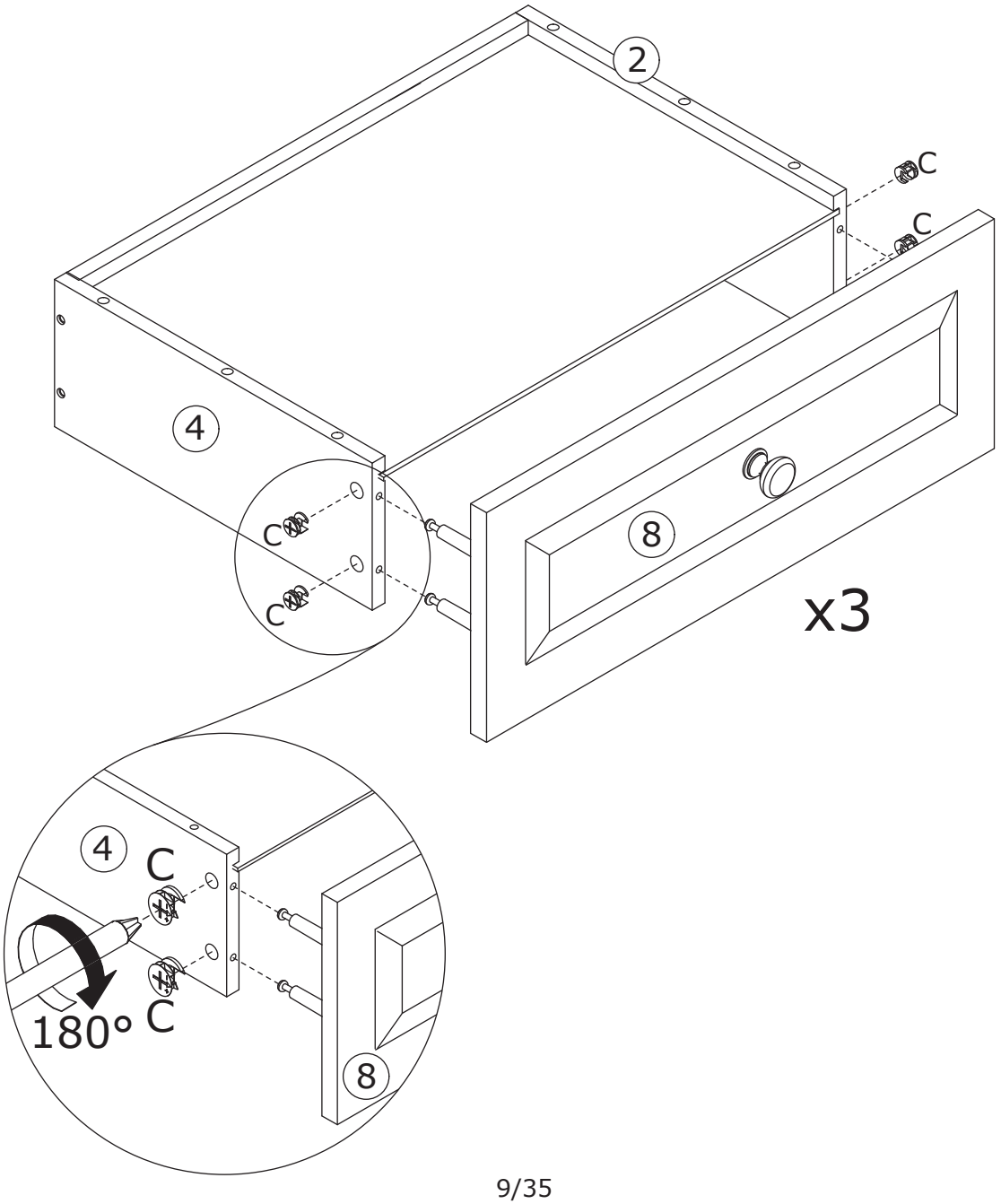

5

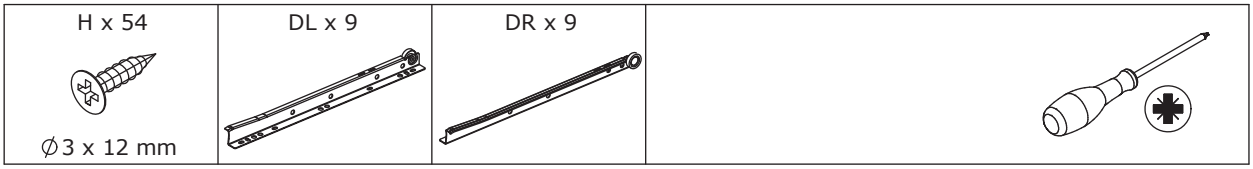

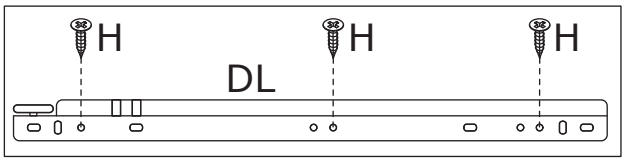

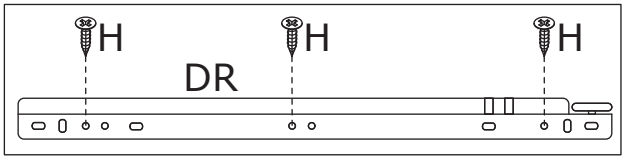

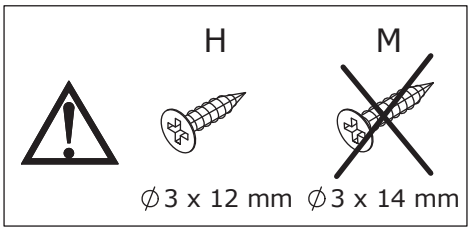

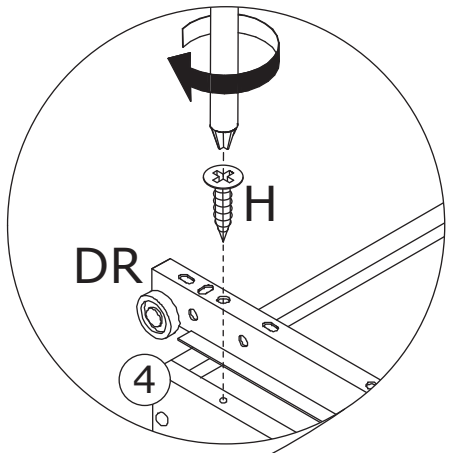

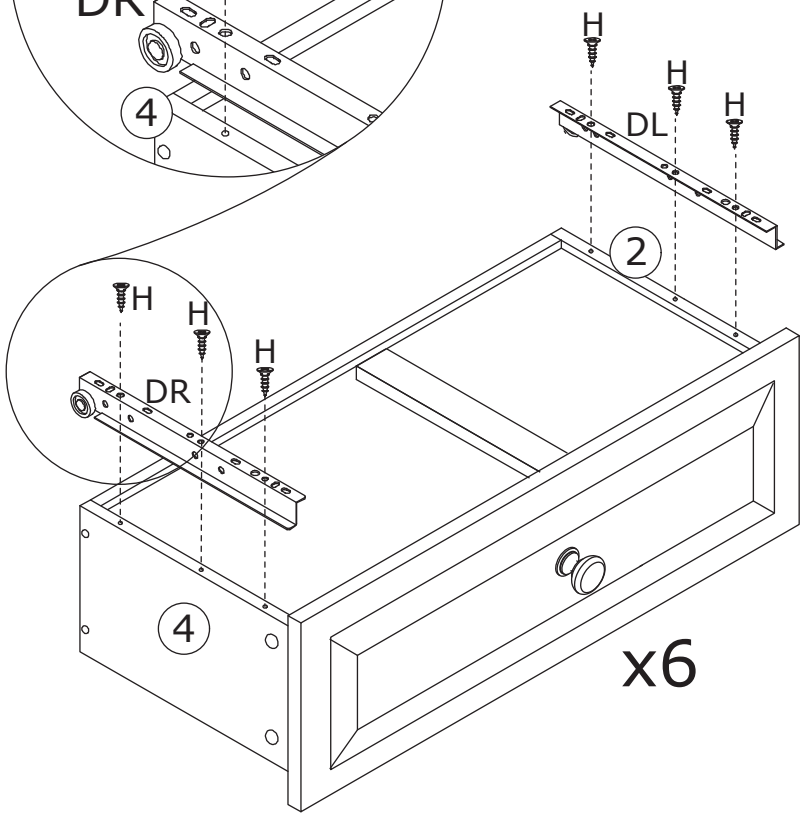

Fix runner(DL) and (DR) to board 2 and 4 respectively with screw(H) as shown.

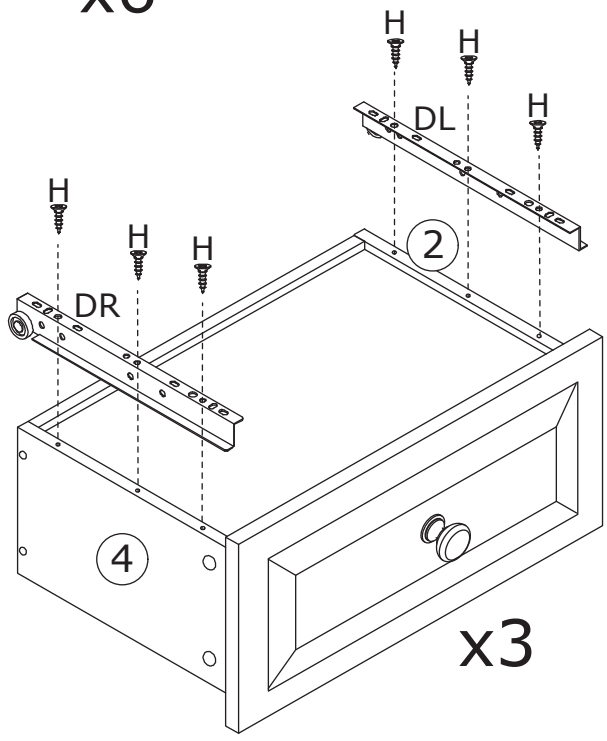

6

B x 8

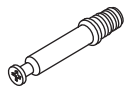

∅6 x 35 mm

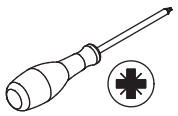

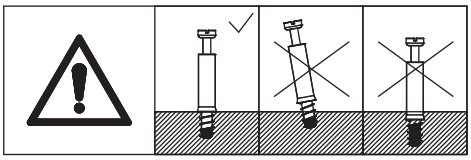

Screw eccentric rod(B) into board 13 and 15 as shown.

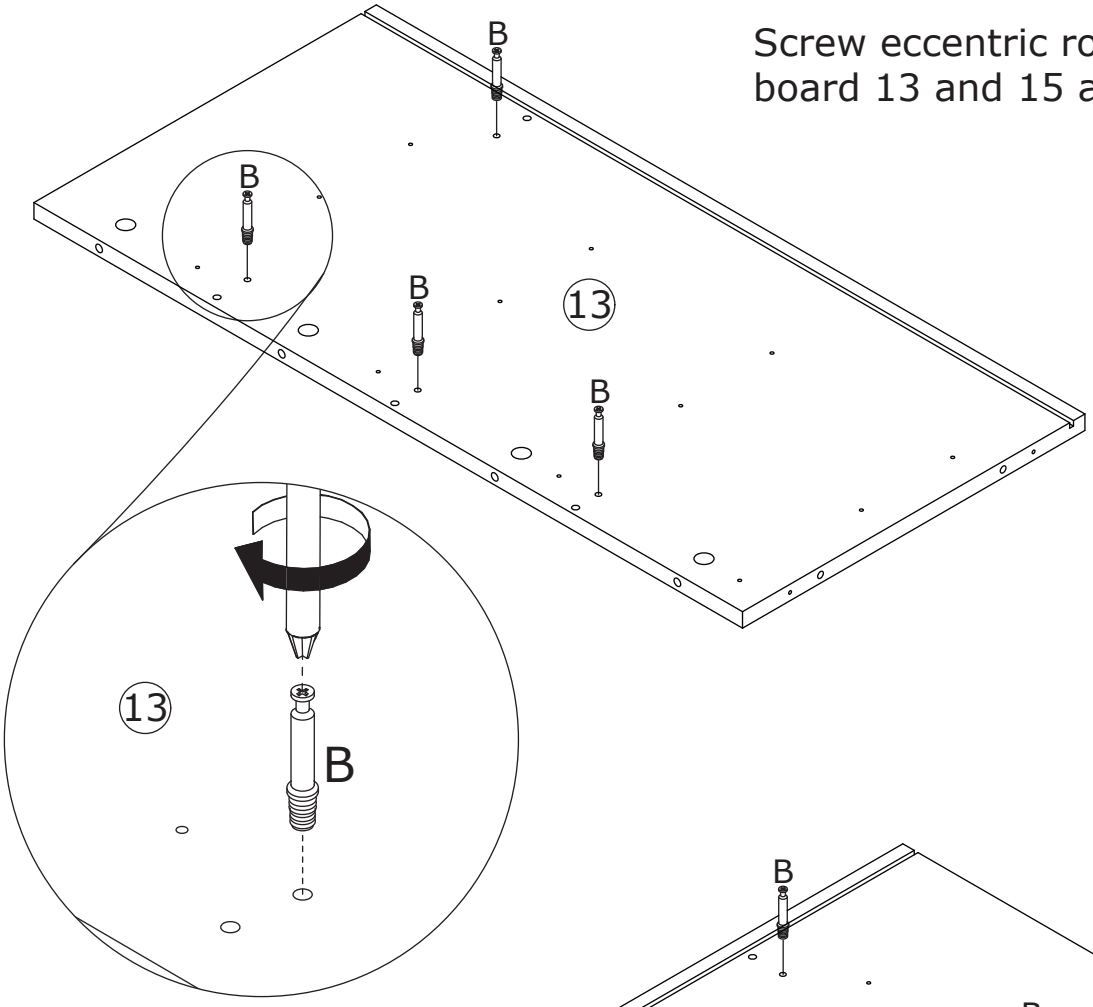

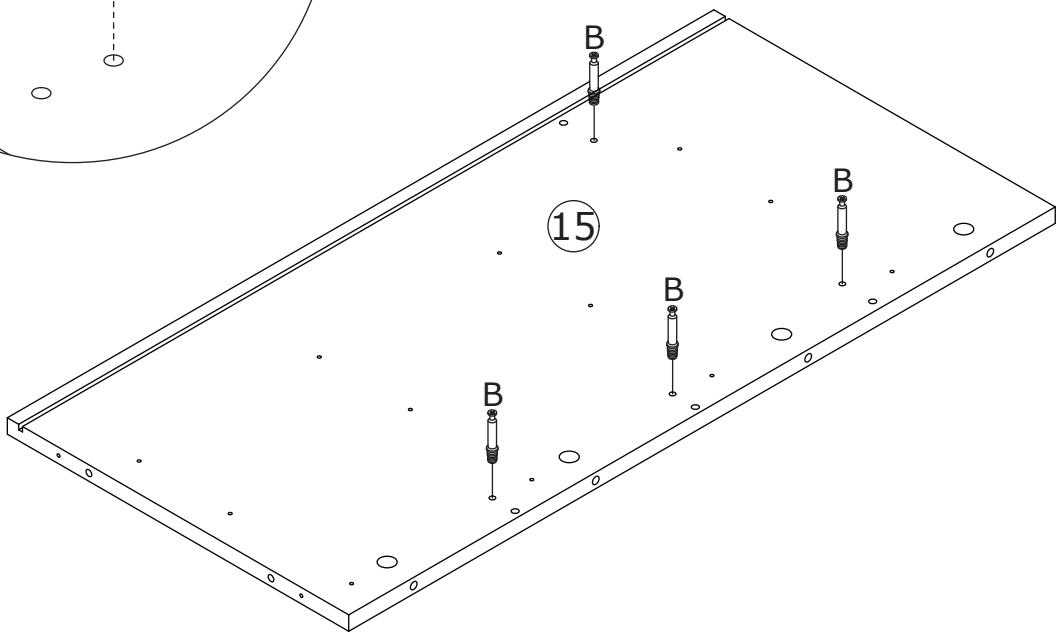

7

H x 30	CL x 5	CR x 5	
 ∅3 x 12 mm	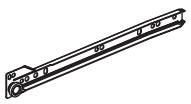		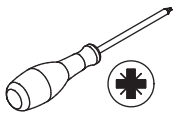

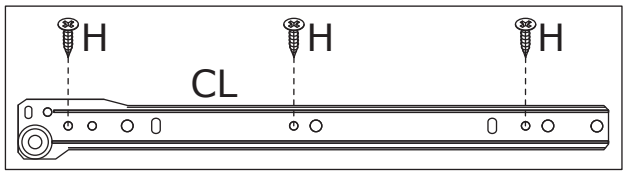

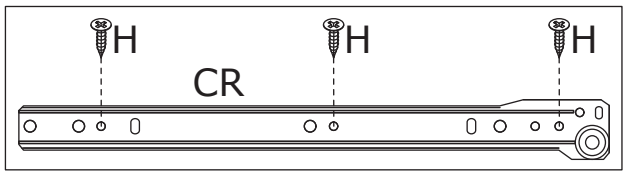

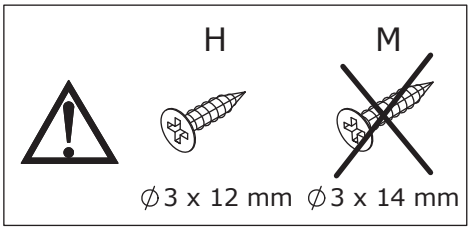

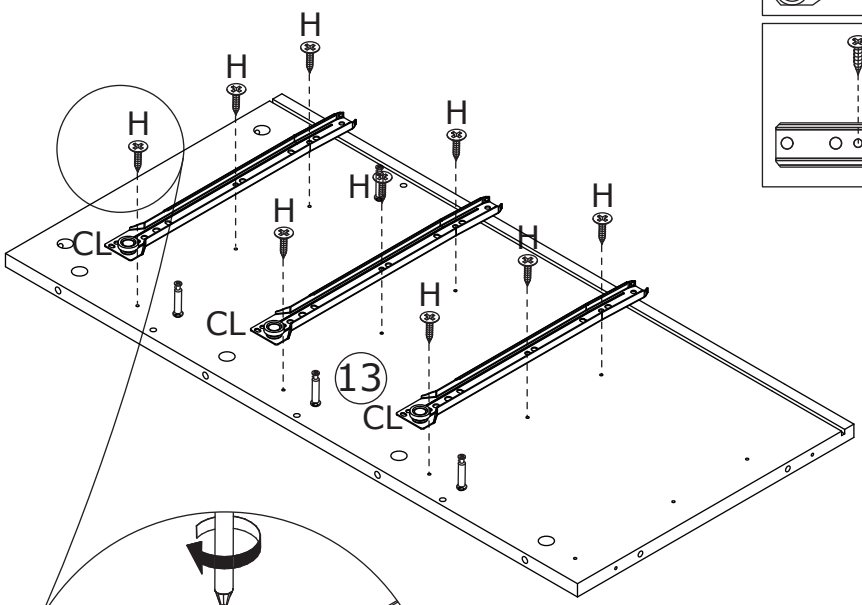

Fix slide rail(CL) and (CR) to board 13 and 15 respectively with screw(H) as shown.

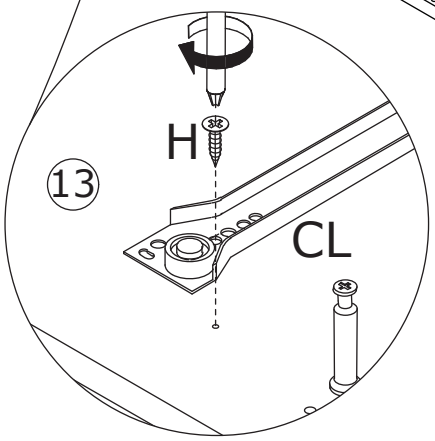

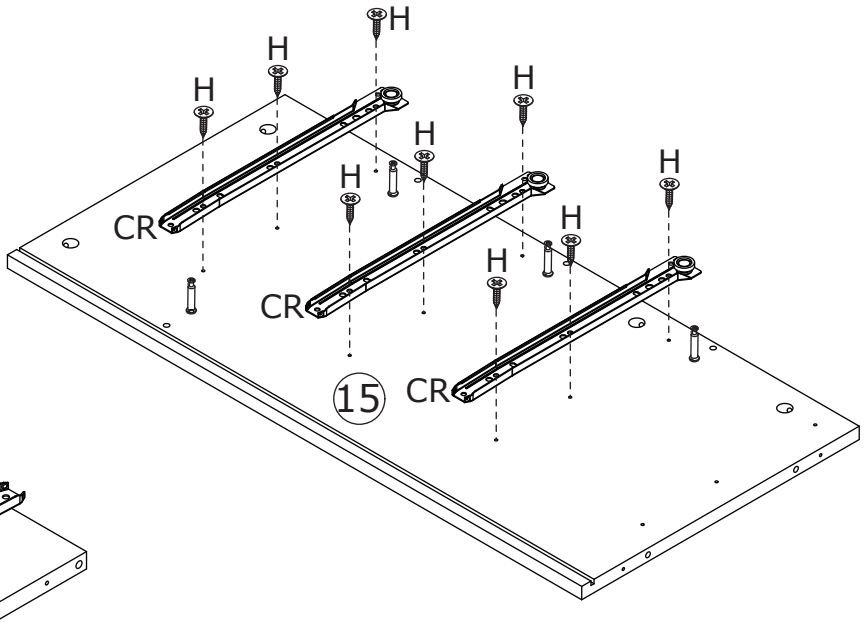

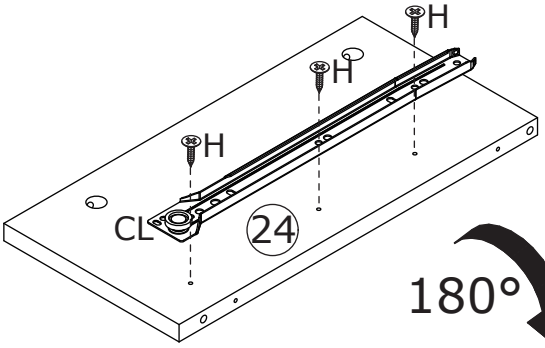

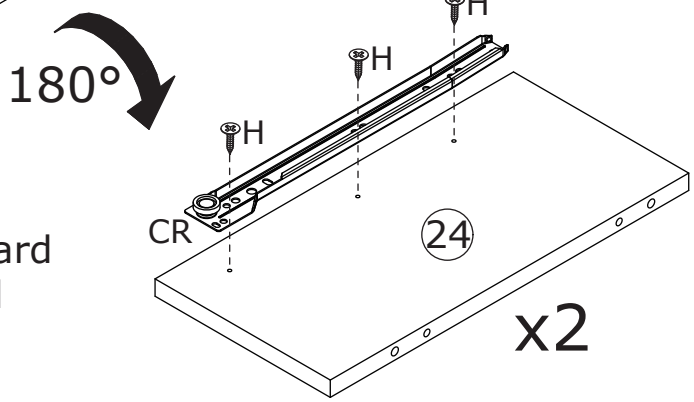

Fix slide rail(CL) to board 24 with screw(H), **and flip to back,** fix slide rail(CR) as shown.

8

B x 8

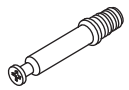

∅6 x 35 mm

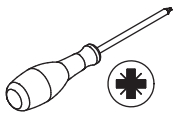

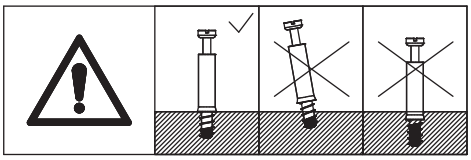

Screw eccentric rod(B)
into board 11 as shown.

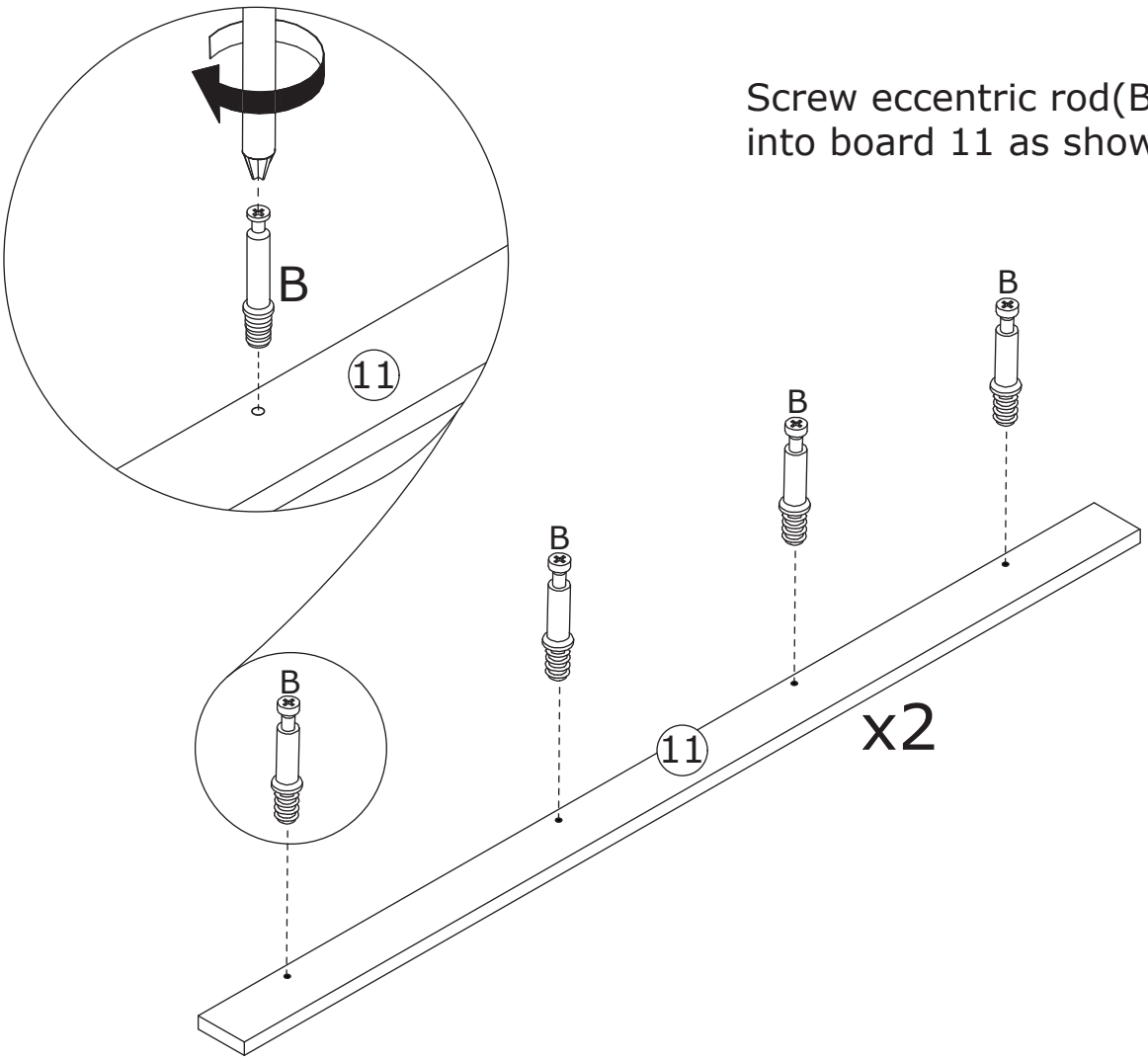

9

C x 8



∅15 x 10 mm

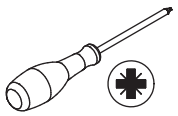

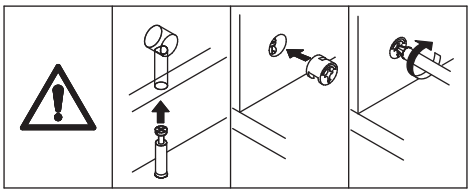

Attach board 11 to board 13 and 15 respectively, add cam lock(C) into board 13,15 and turn clockwise to tighten as shown.

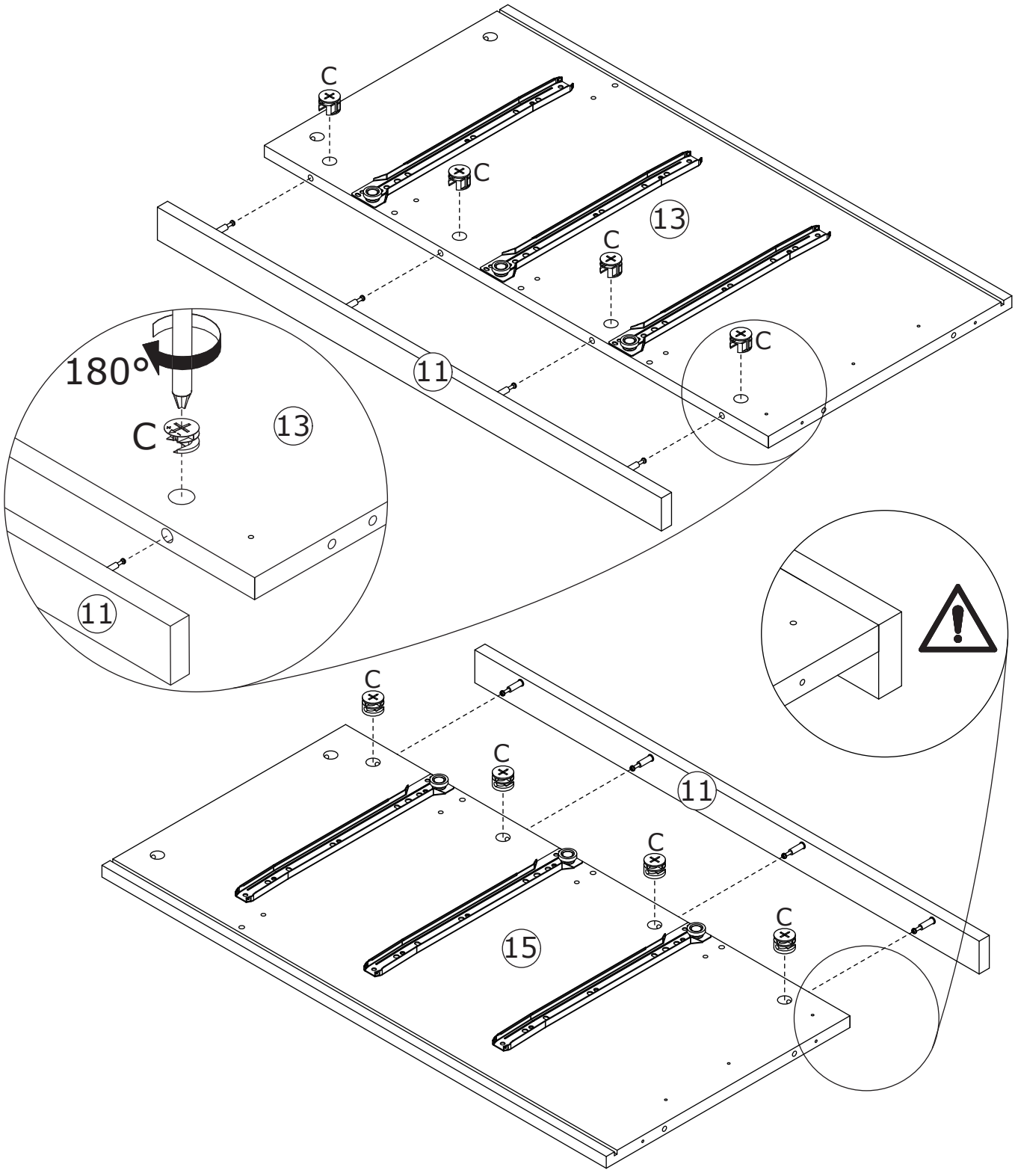

10

B x 4	H x 18	CL x 3	CR x 3	
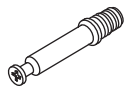		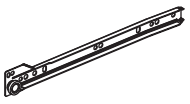		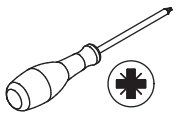
∅6 x 35 mm	∅3 x 12 mm			

Screw eccentric rod(B) into board 14 at first, **flip to back,** screw eccentric rod(B) into as well.

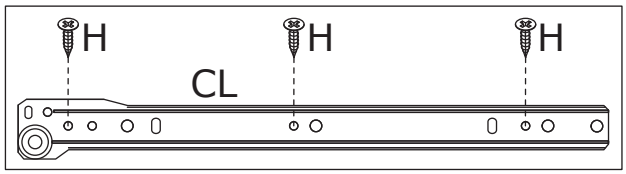

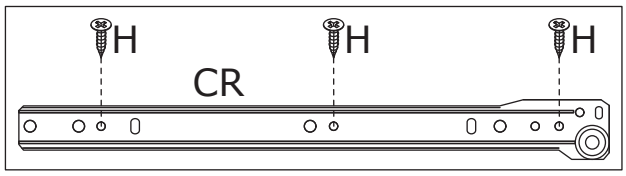

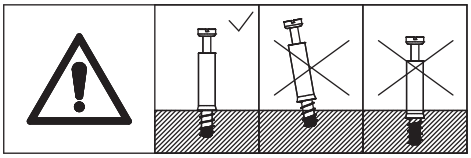

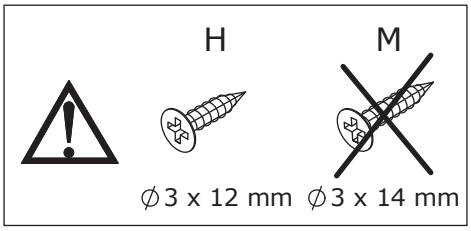

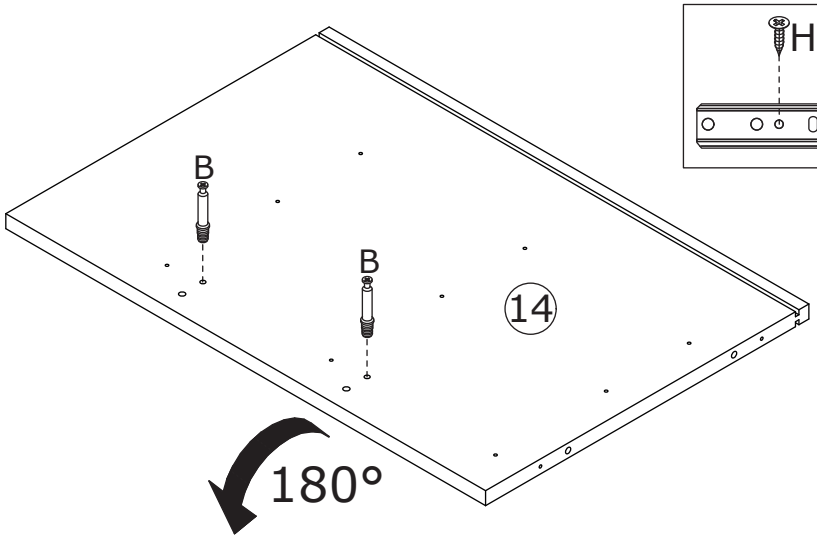

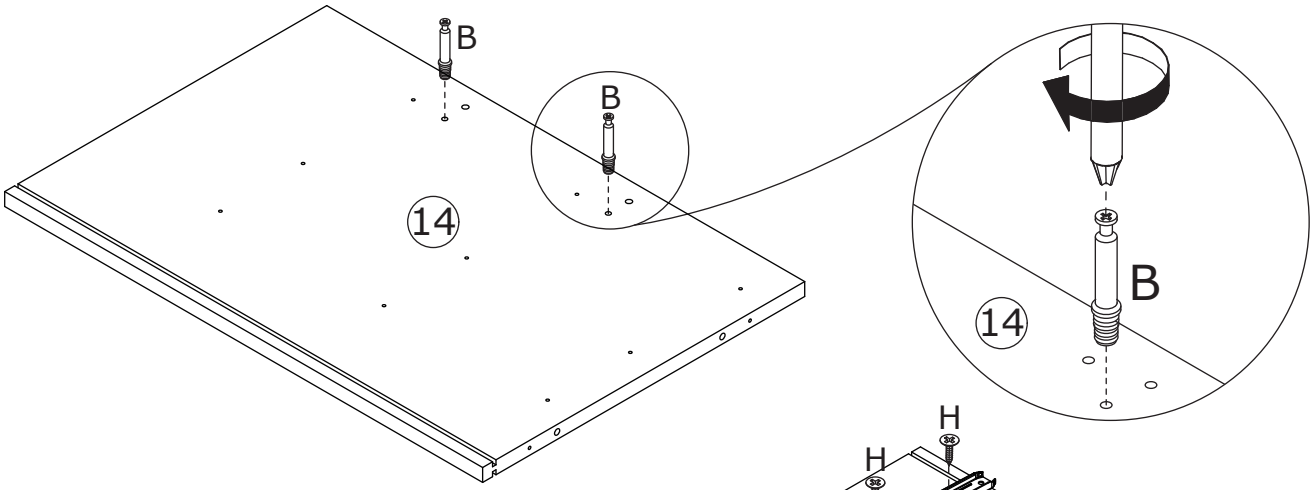

Fix slide rail(CR) to board 14 with screw(H), **and flip to back,** fix slide rail(CL) as shown.

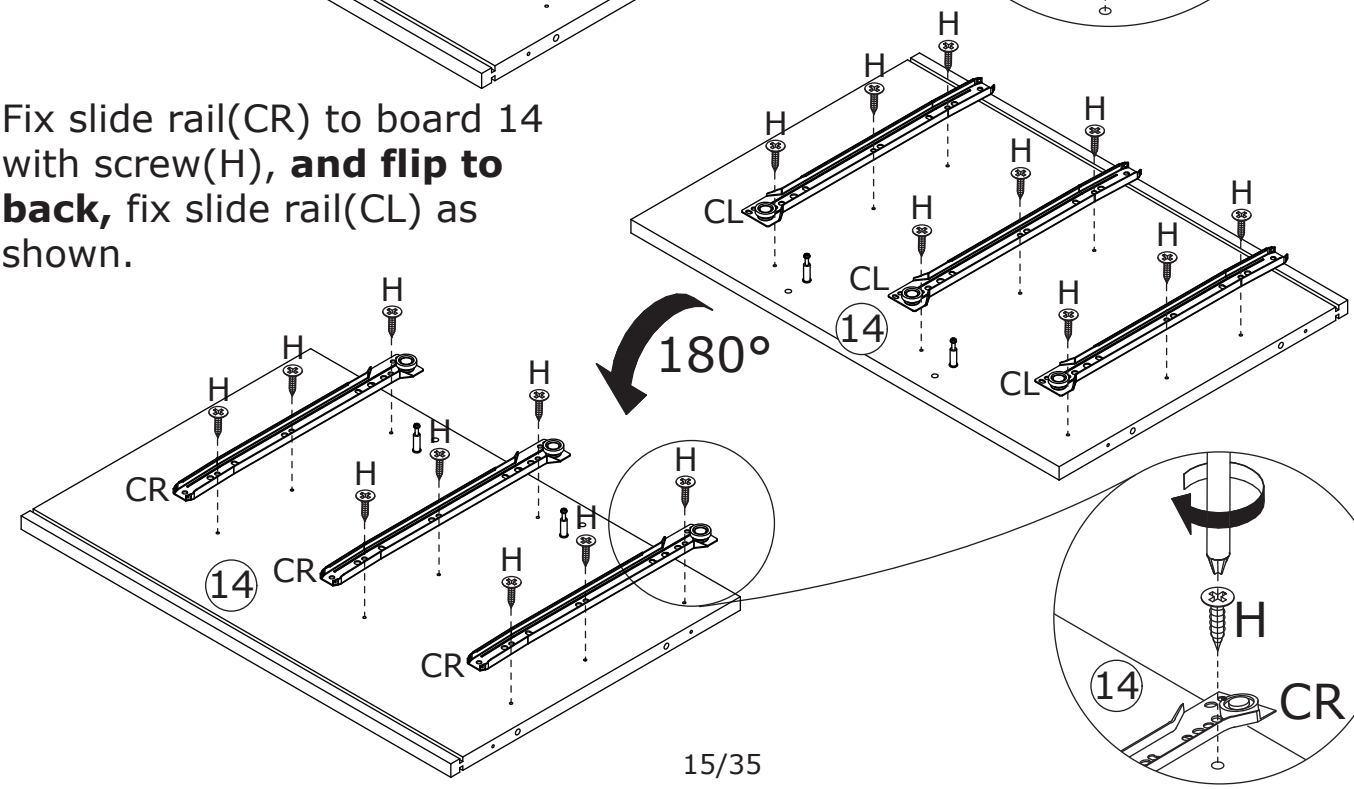

11



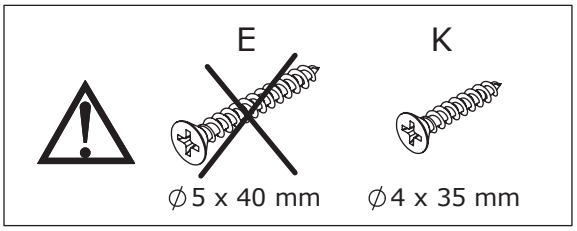

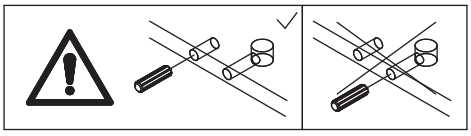

Attach board 24 to board 23 and 26 using wooden dowel(A), and fix with screw(K) as shown.

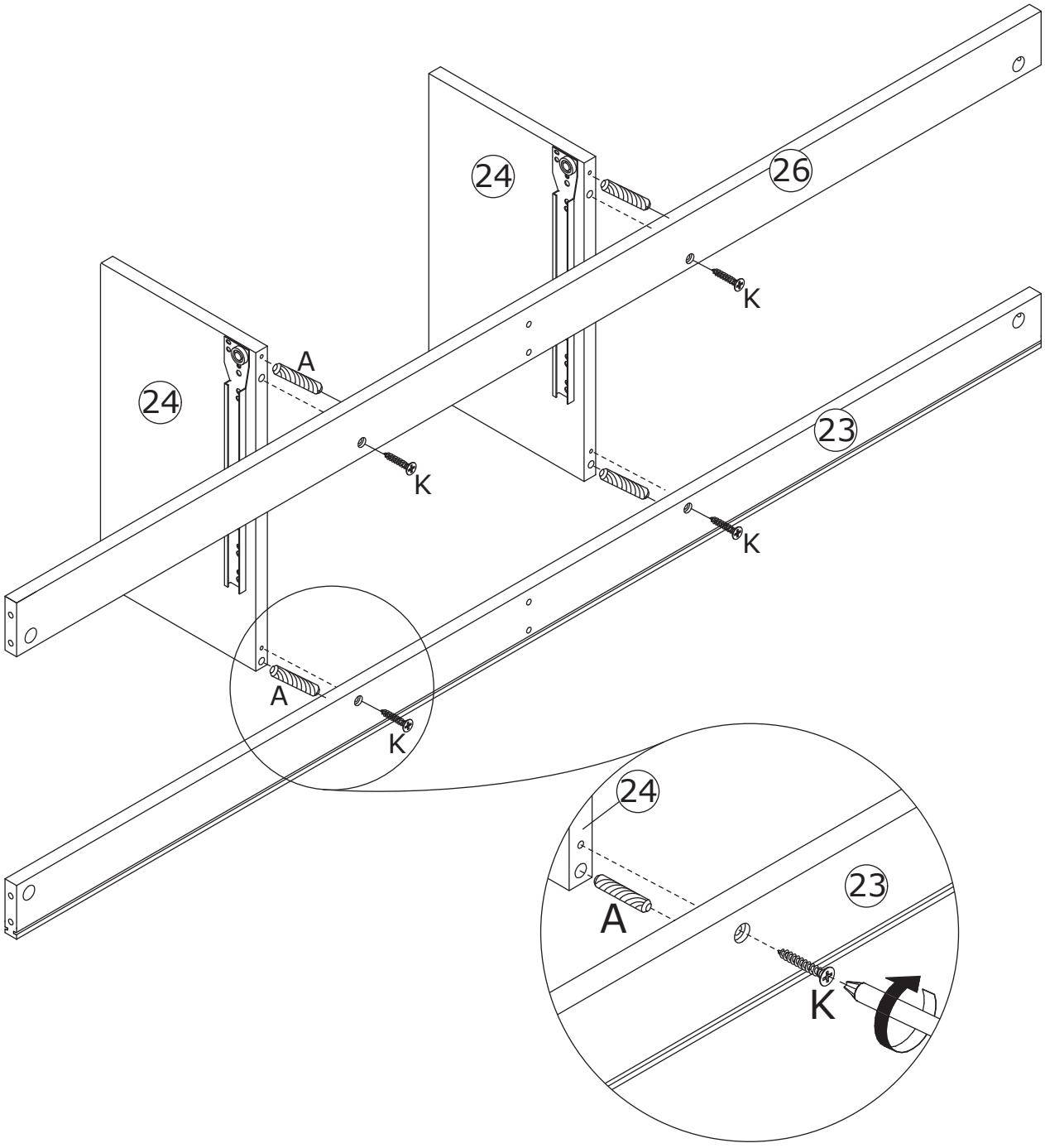

12

A x 2	K x 2	
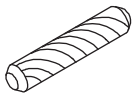	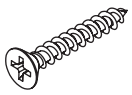 ∅4 x 35 mm	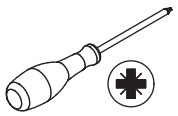

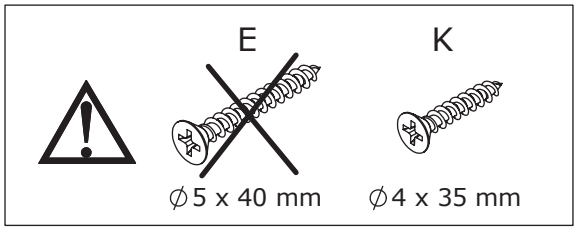

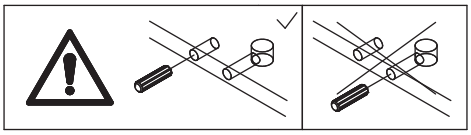

Attach board 14 to board 23 and 26 using wooden dowel(A), and fix with screw(K) as shown.

13

A x 2	C x 2	
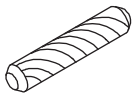	 ∅15 x 10 mm	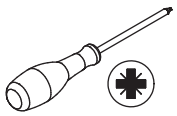

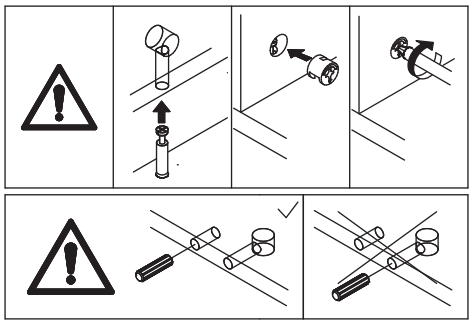

Attach board 25 to board 13 using wooden dowel(A), add cam lock(C) into board 25 and turn clockwise to tighten as shown.

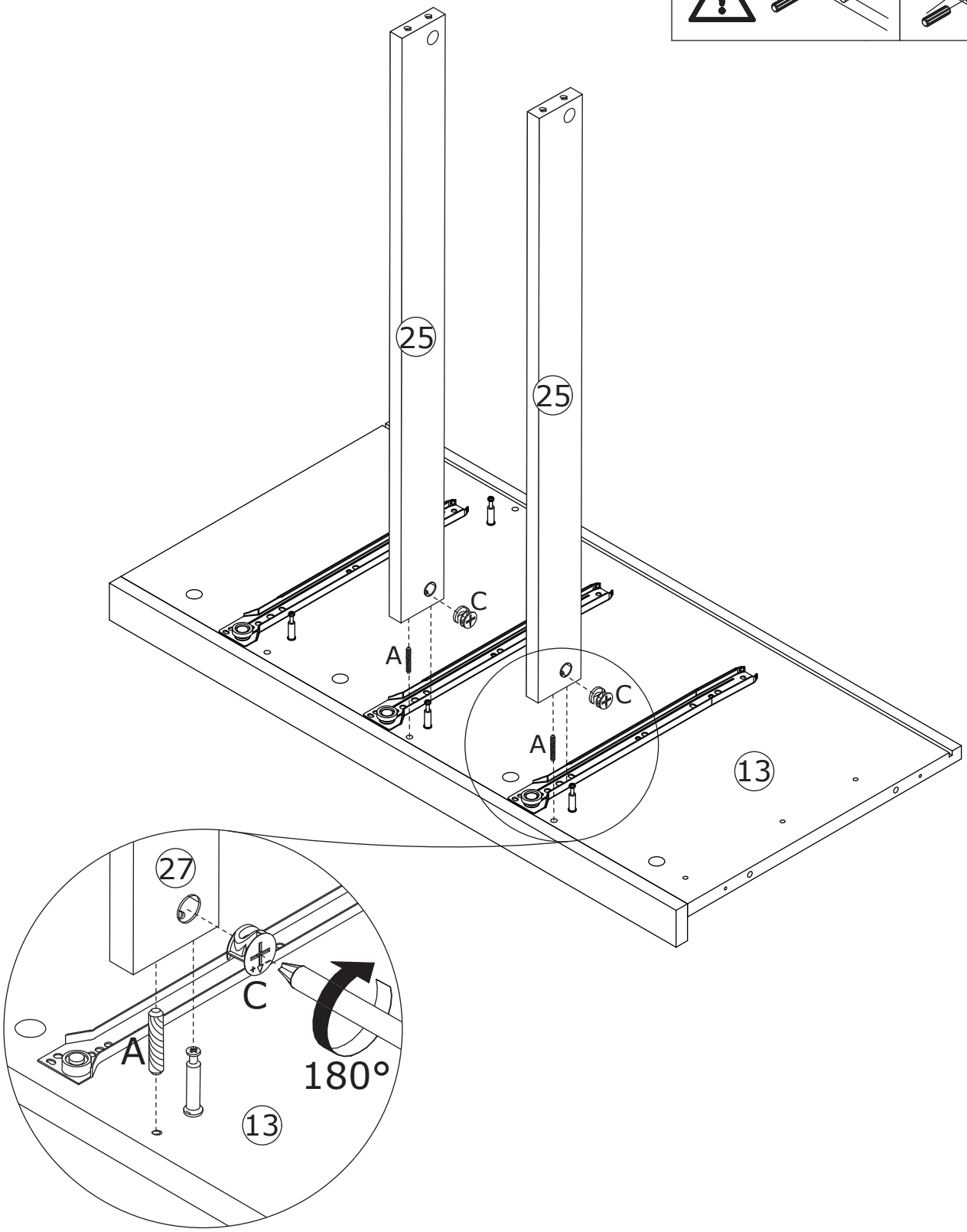

14

A x 2	C x 4	N x 2	
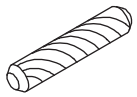	 ∅15 x 10 mm	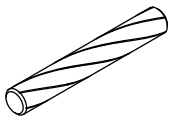	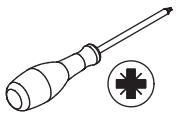

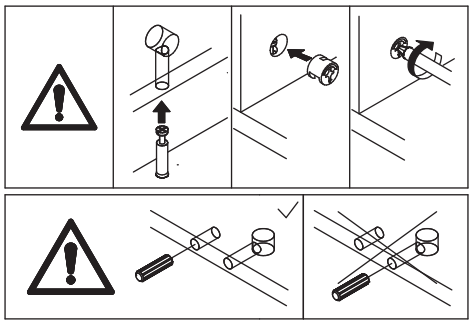

Attach board 25 to board 14; board 13 to board 26 using wooden dowel(A), add cam lock(C) into board 26,25 and turn clockwise to tighten as shown.

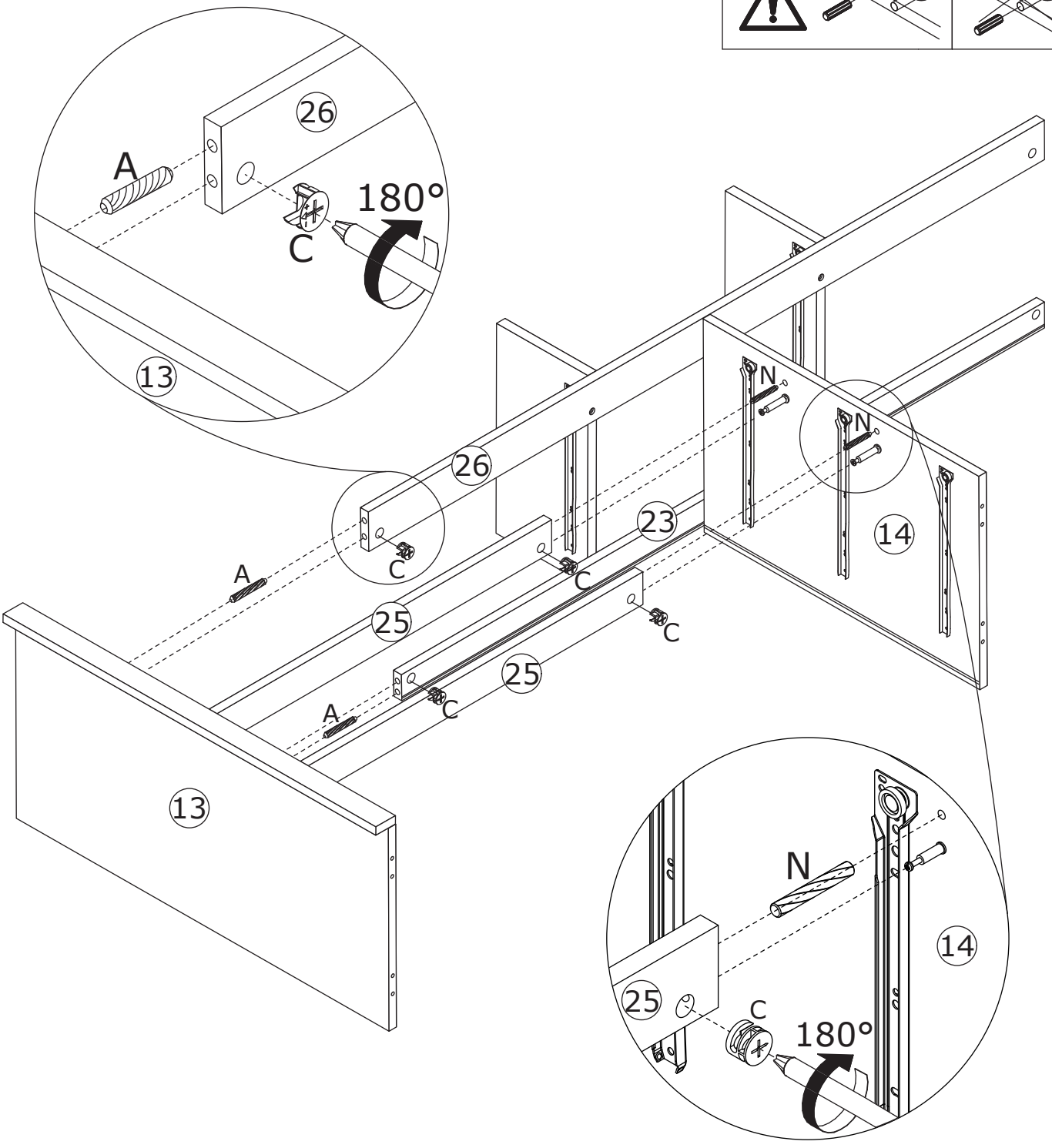

15

A x 2	C x 2	
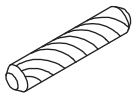	 ∅15 x 10 mm	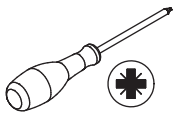

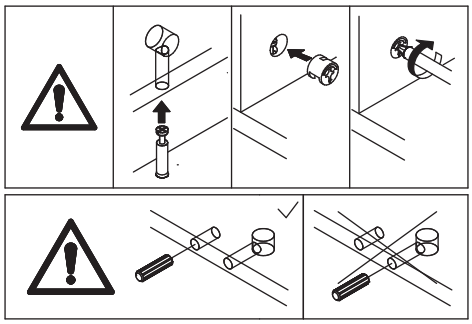

Attach board 25 to board 15 using wooden dowel(A), add cam lock(C) into board 25 and turn clockwise to tighten as shown.

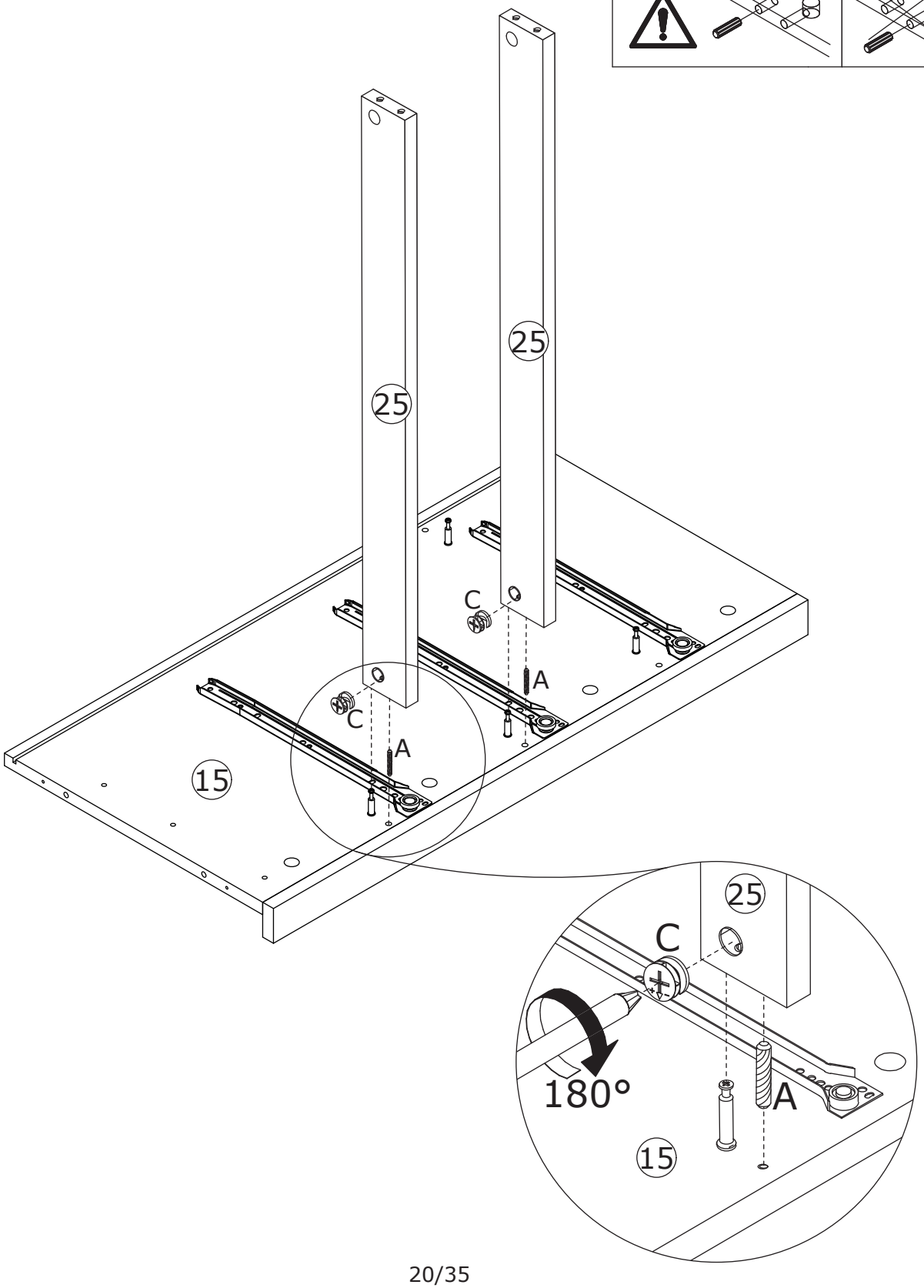

16

A x 2	C x 4	
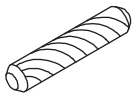	 ∅15 x 10 mm	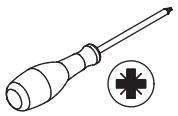

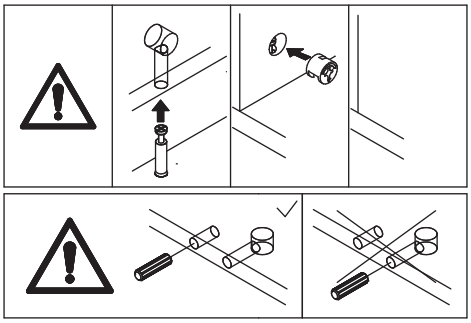

Attach board 25 to board 14; board 15 to board 26 using wooden dowel(A), add cam lock(C) into board 26,25 and turn clockwise to tighten as shown.

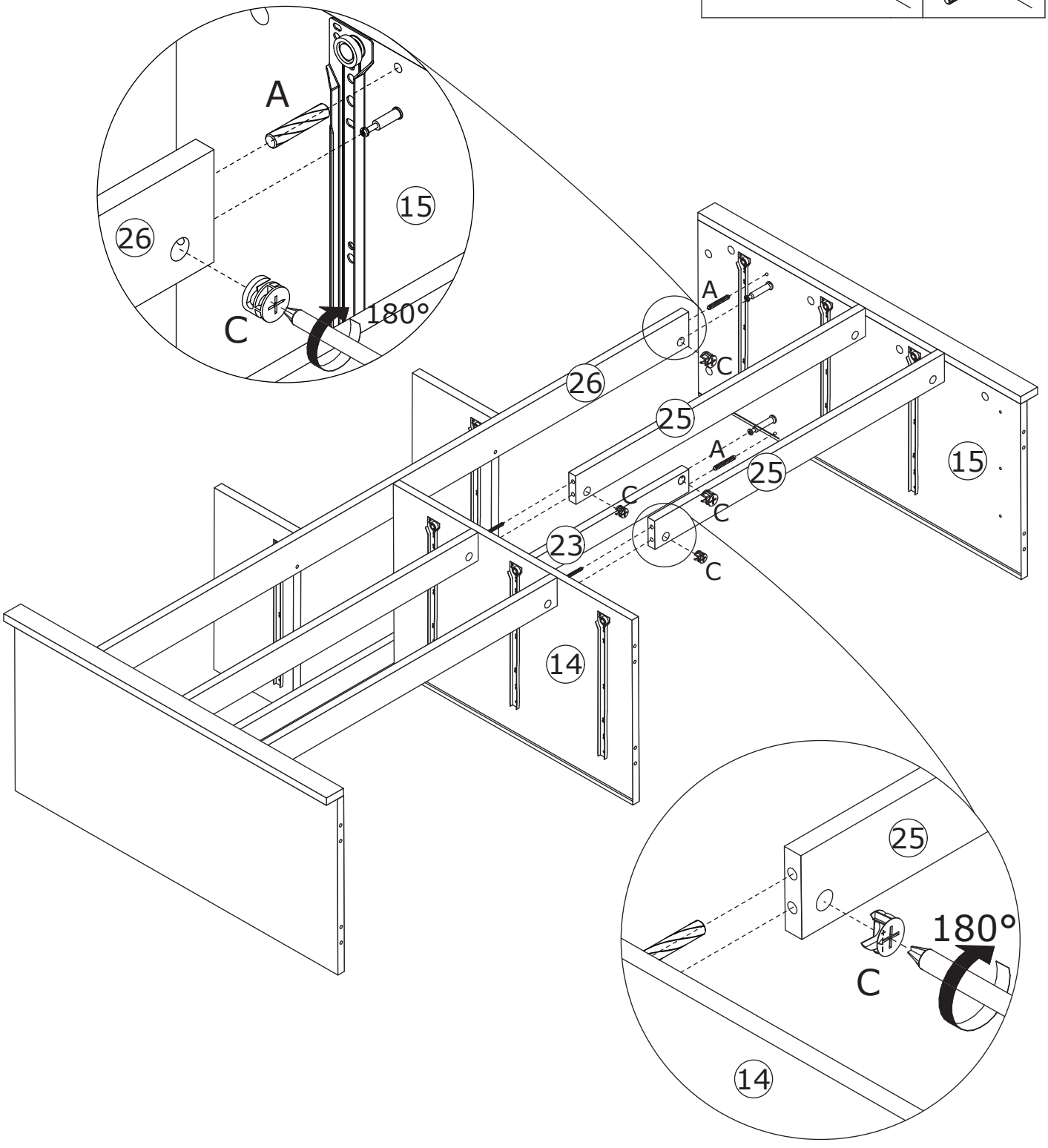

17

Insert back board 9 and plank 7
along available grooves as shown.

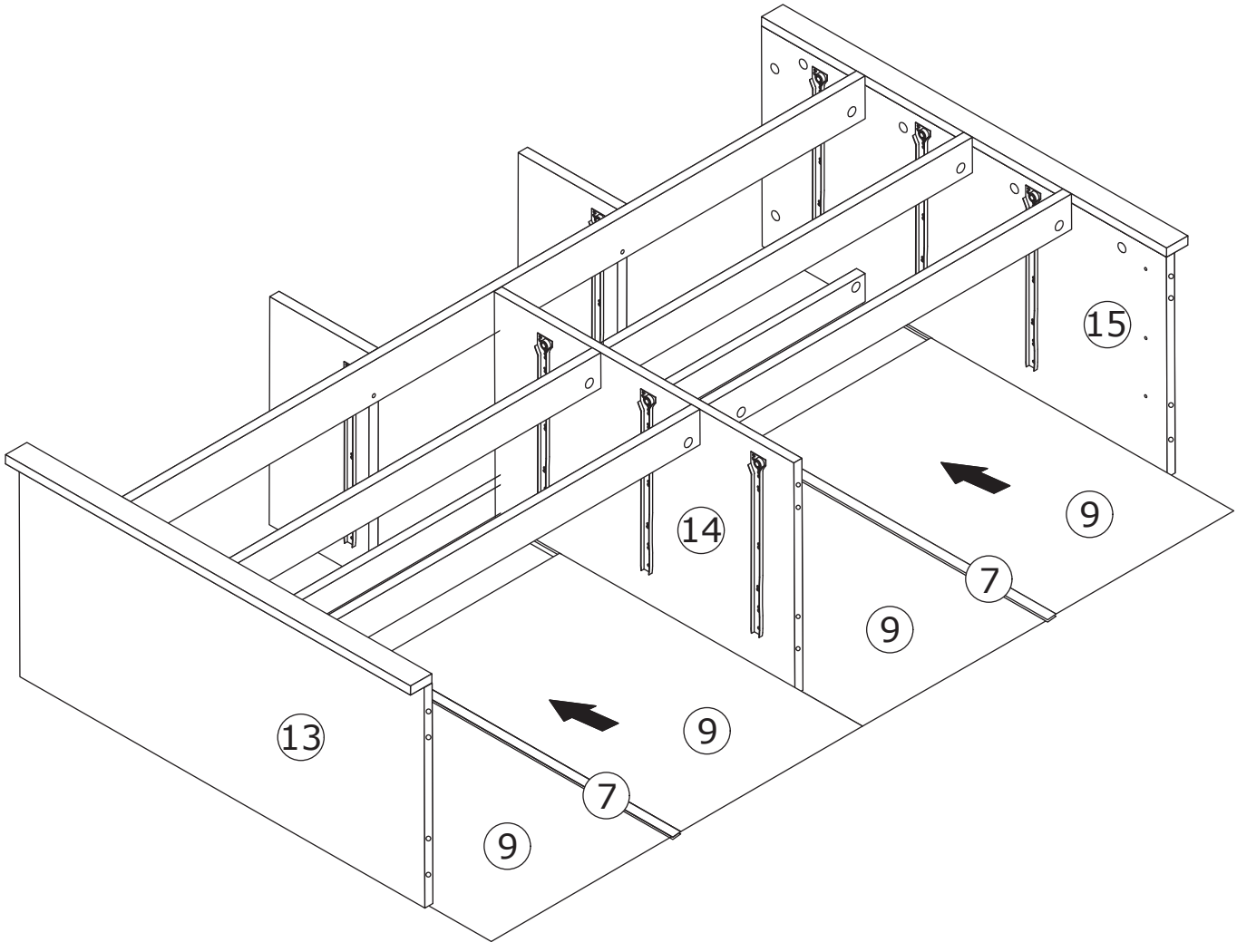

18

B x 8

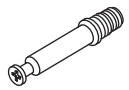

∅6 x 35 mm

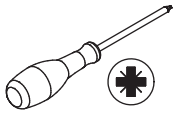

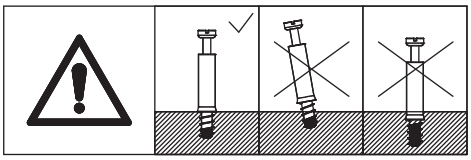

Screw eccentric rod(B) into board 16 as shown.

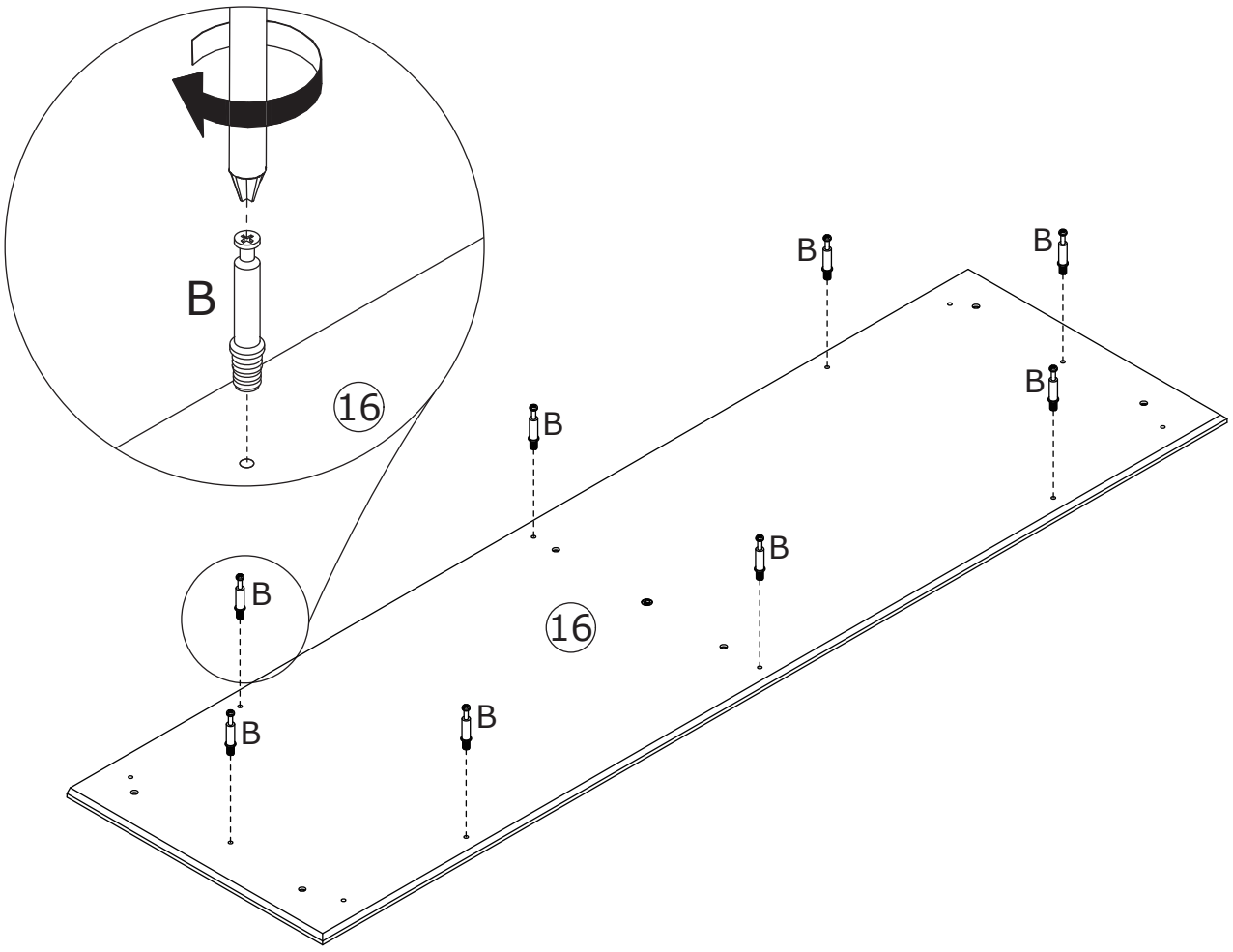

19

A x 6	J x 1	K x 6		
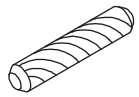		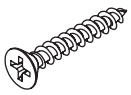 ∅4 x 35 mm		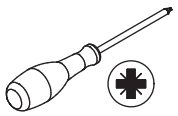

Attach board 16 to board 14 using wooden dowel(A) and fix with screw(K) as shown.

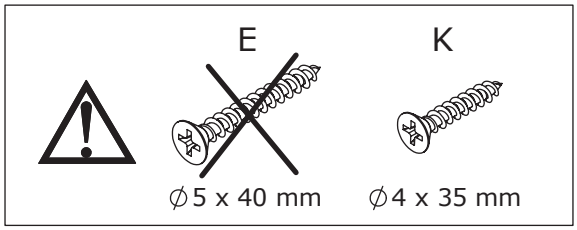

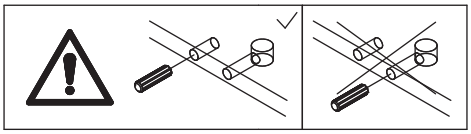

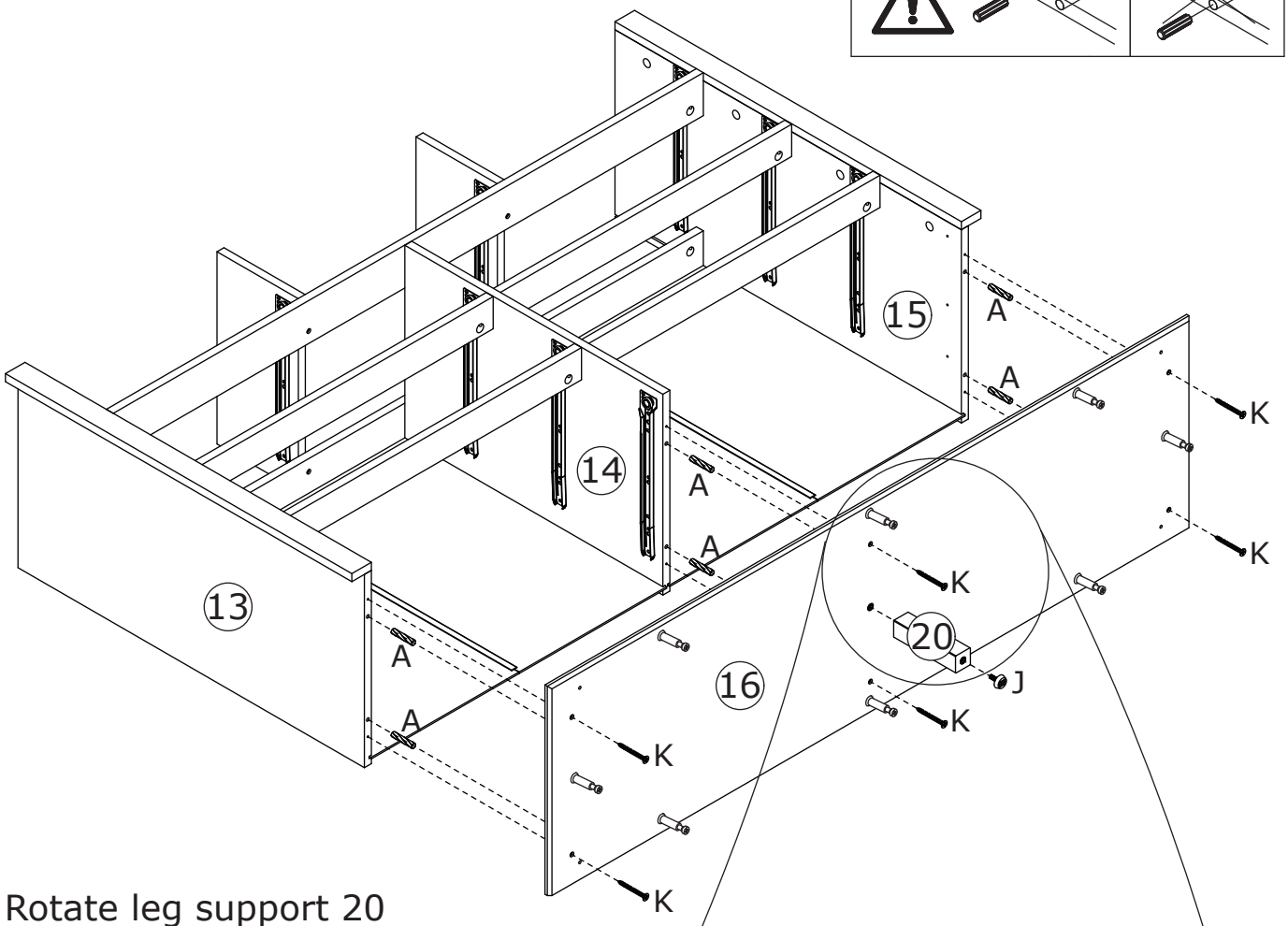

Rotate leg support 20 into board 16 as shown.

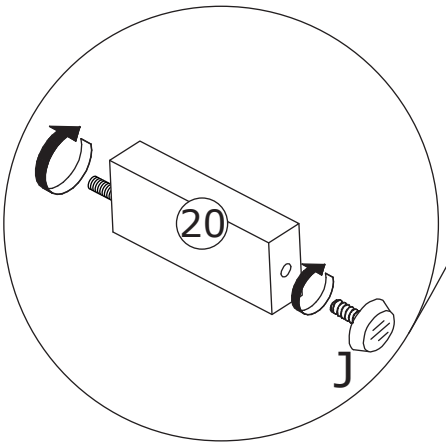

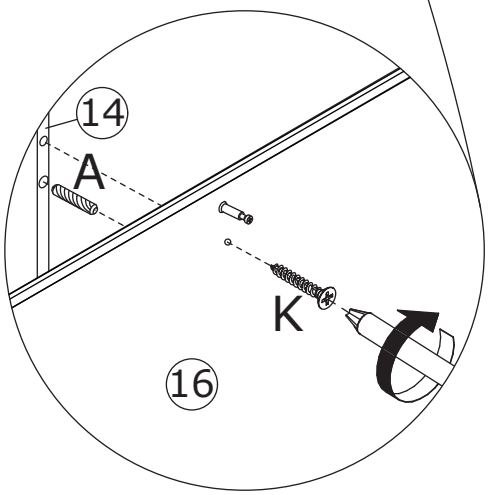

20

B x 16	C x 8	
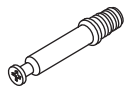		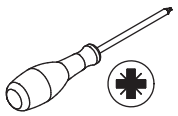
∅6 x 35 mm	∅15 x 10 mm	

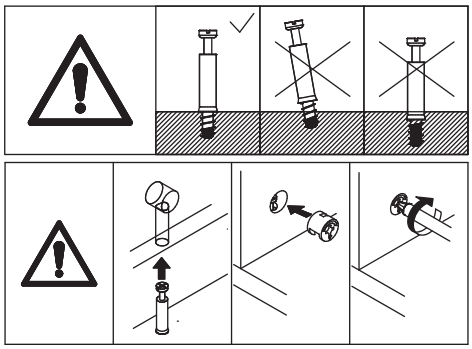

Screw eccentric rod(B) into leg 19 as shown. Connect leg 19 to board 18, add cam lock(C) into board 18 and turn clockwise to tighten as shown.

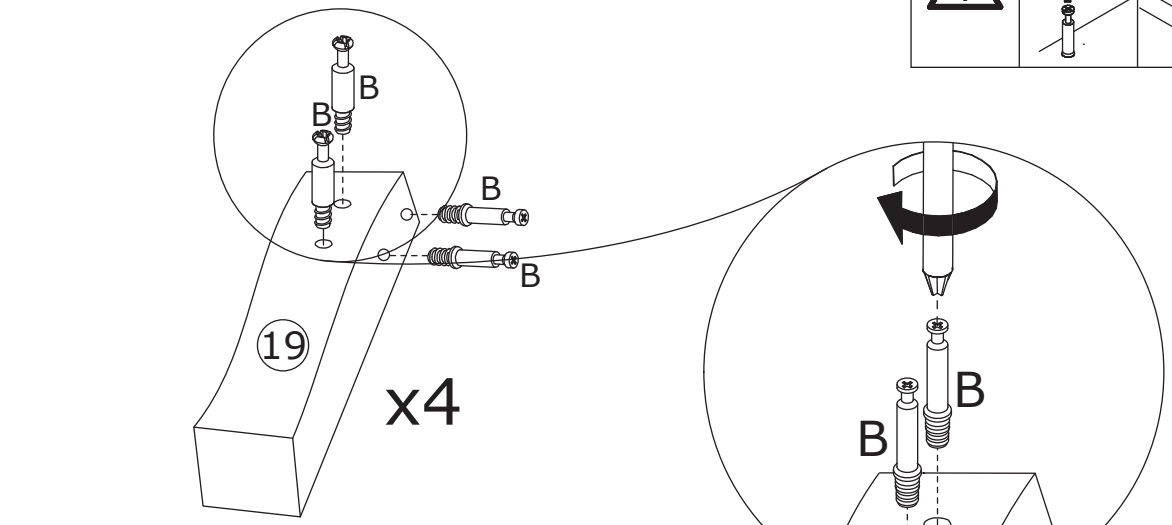

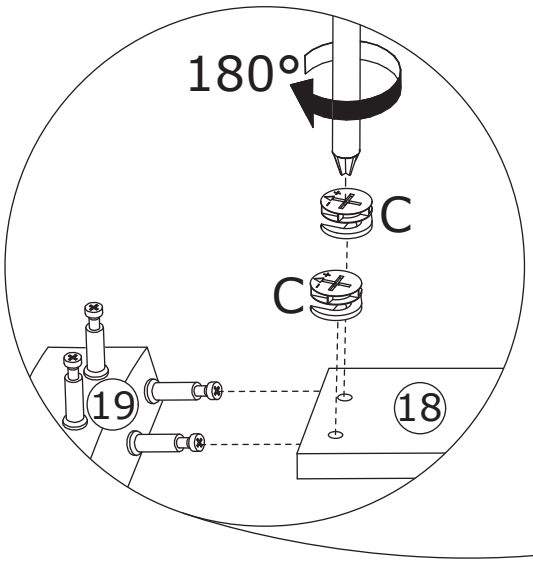

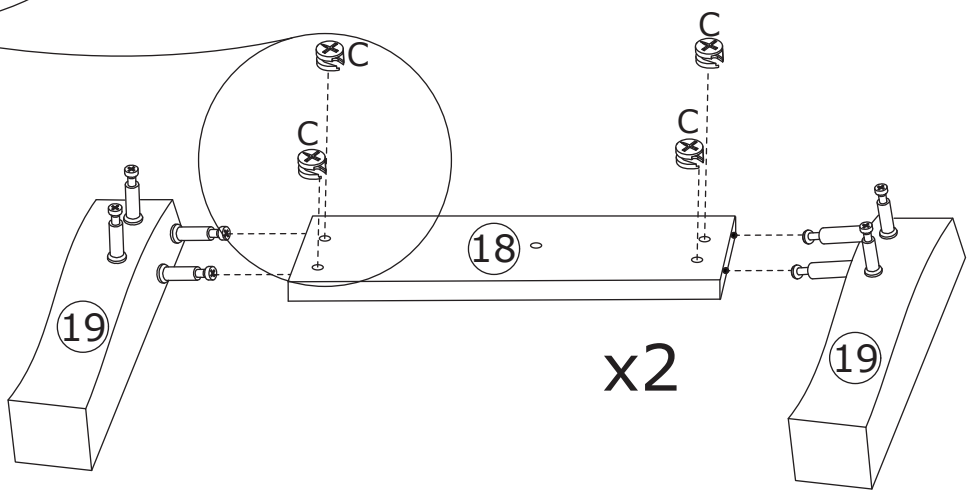

21

C x 8



∅15 x 10 mm

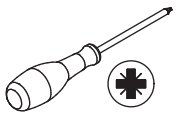

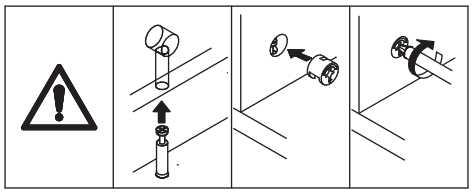

Connect leg 19 to board 17, add cam lock(C)
into board 17 and turn clockwise to tighten as shown.

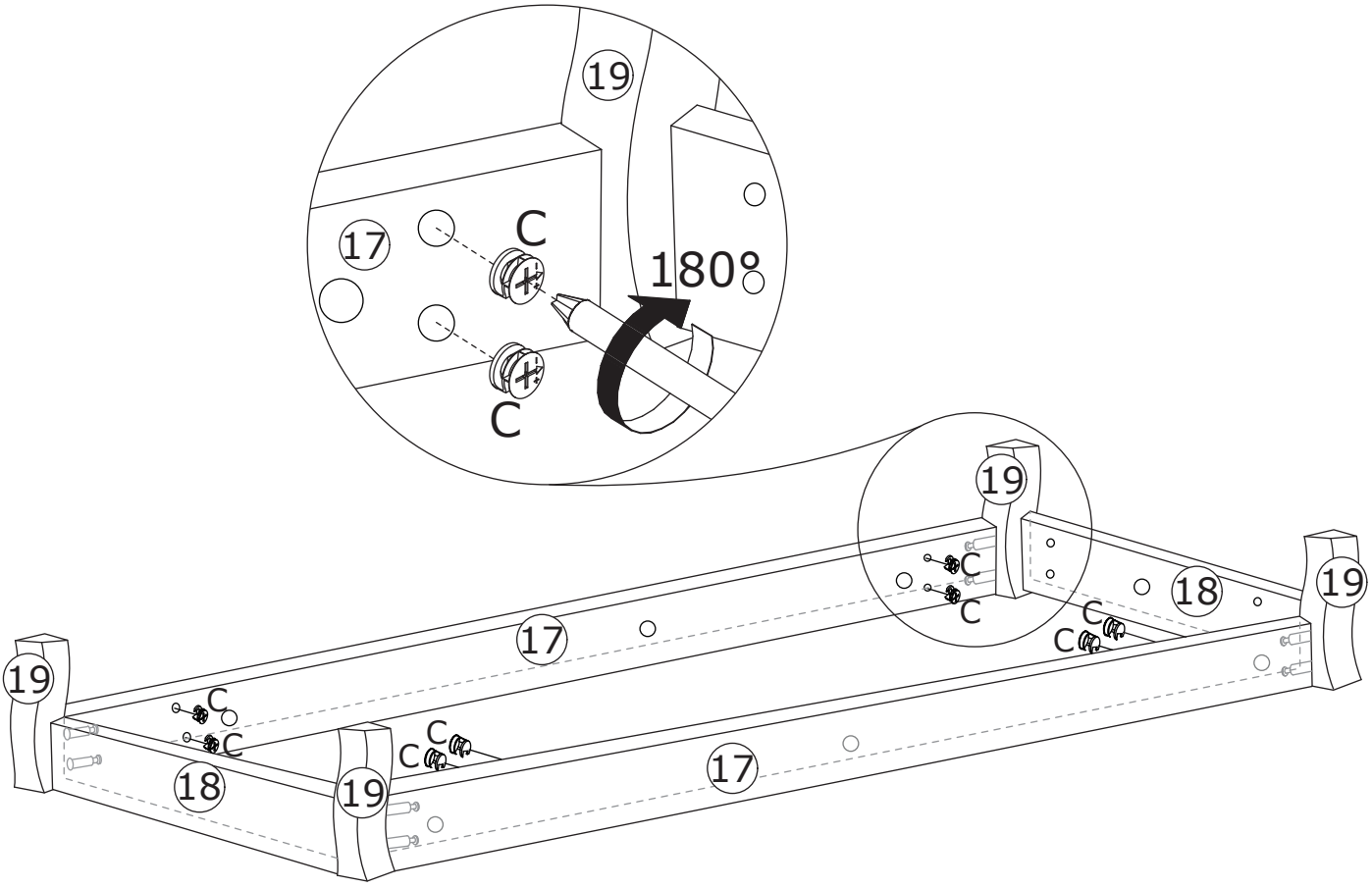

22

C x 8



∅15 x 10 mm

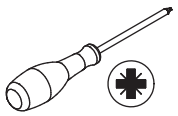

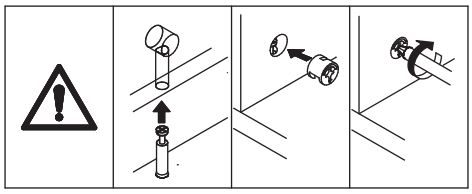

Attach the base component to board 16, add cam lock(C) into board 18,17 and turn clockwise to tighten as shown.

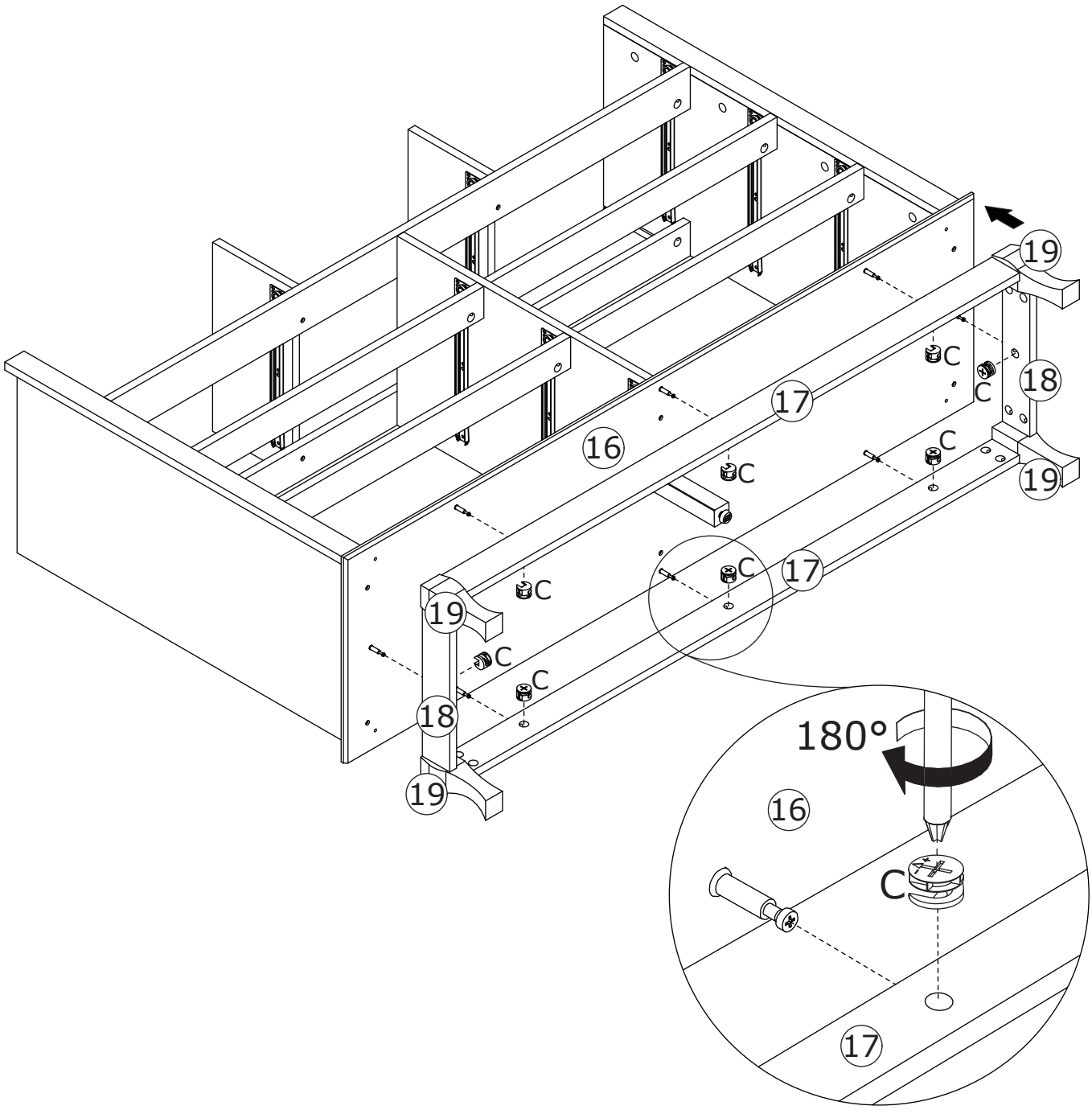

23

E x 4



∅5 x 40 mm

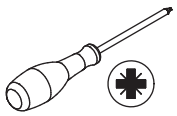



E

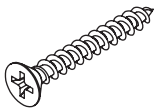

∅5 x 40 mm

K



∅4 x 35 mm

Fix board 16 to the bottom with screw(E).

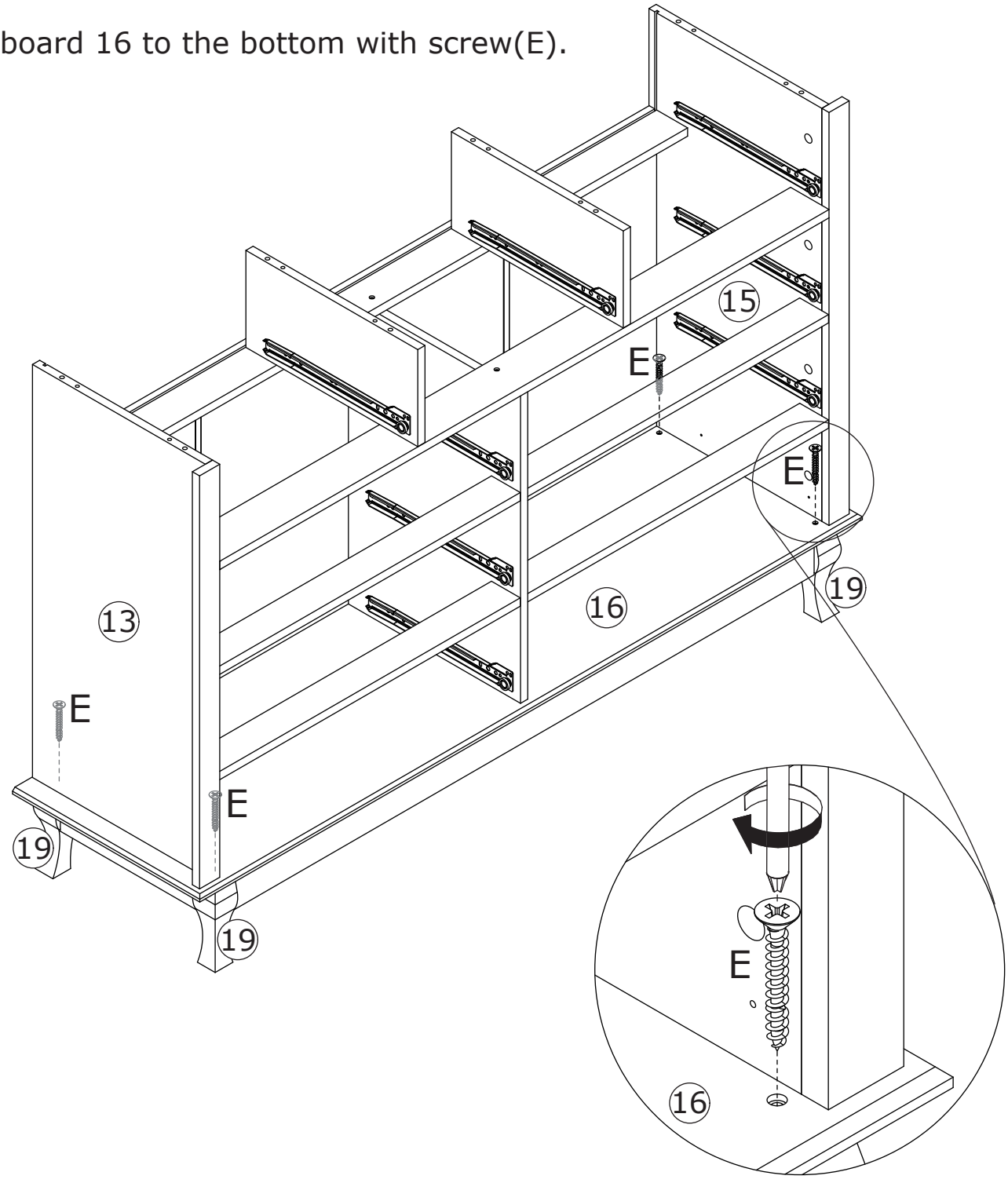

24

H x 6	CL x 1	CR x 1	
∅3 x 12 mm			

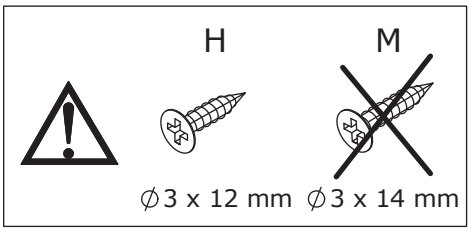

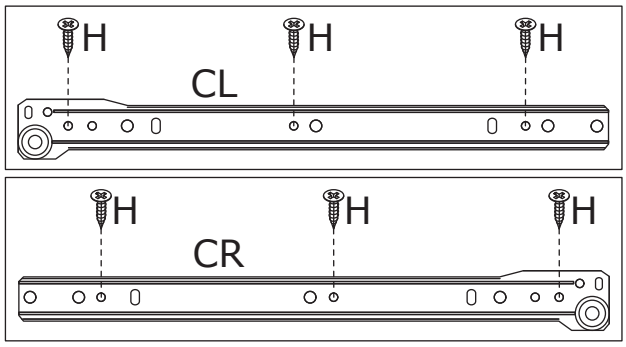

Fix slide rail(CL) to board 13 with crew(H) as shown.
Fix slide rail(CR) to board 15 with screw(H) as shown.

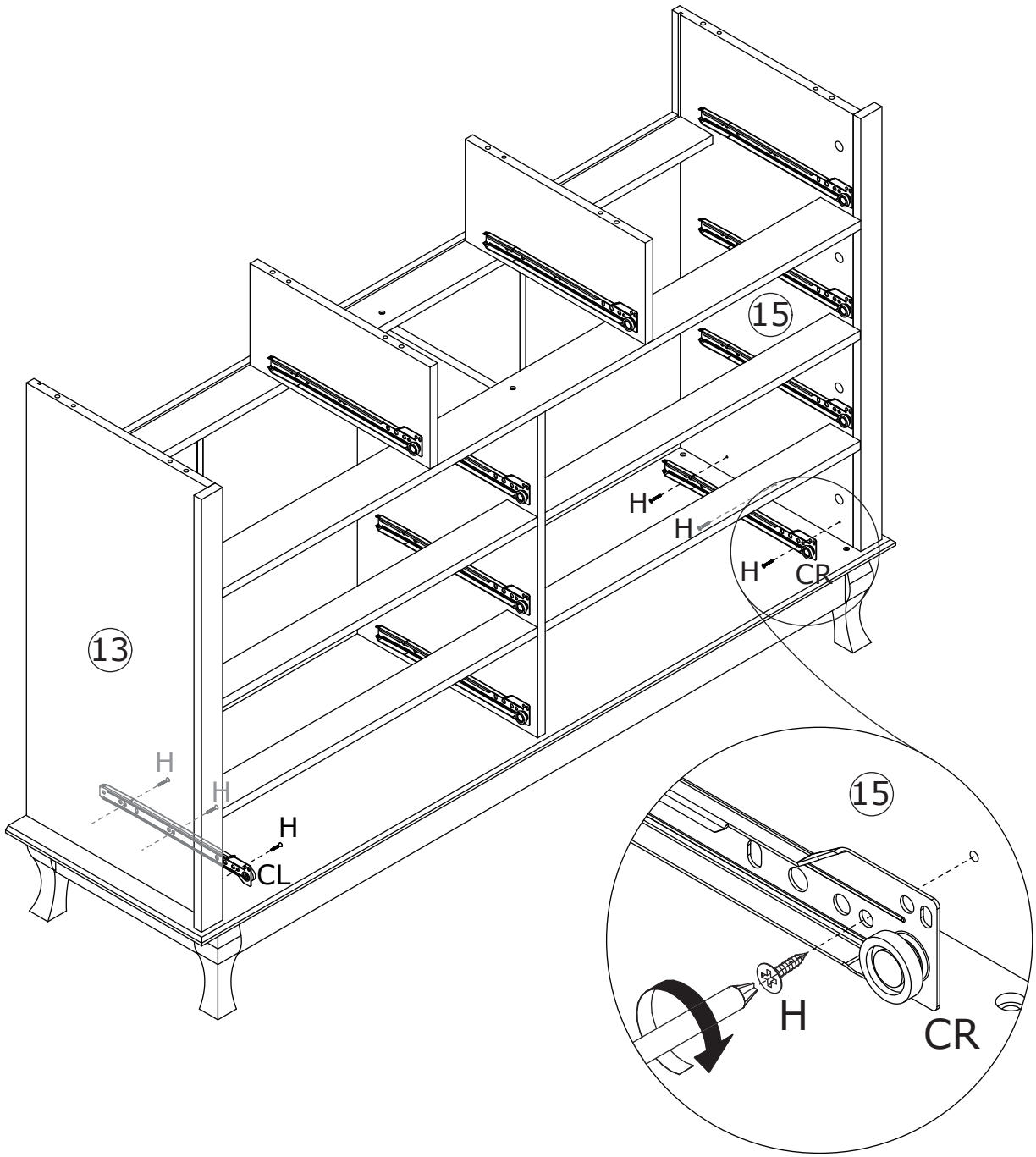

25

Insert back board 22 along available grooves as shown.

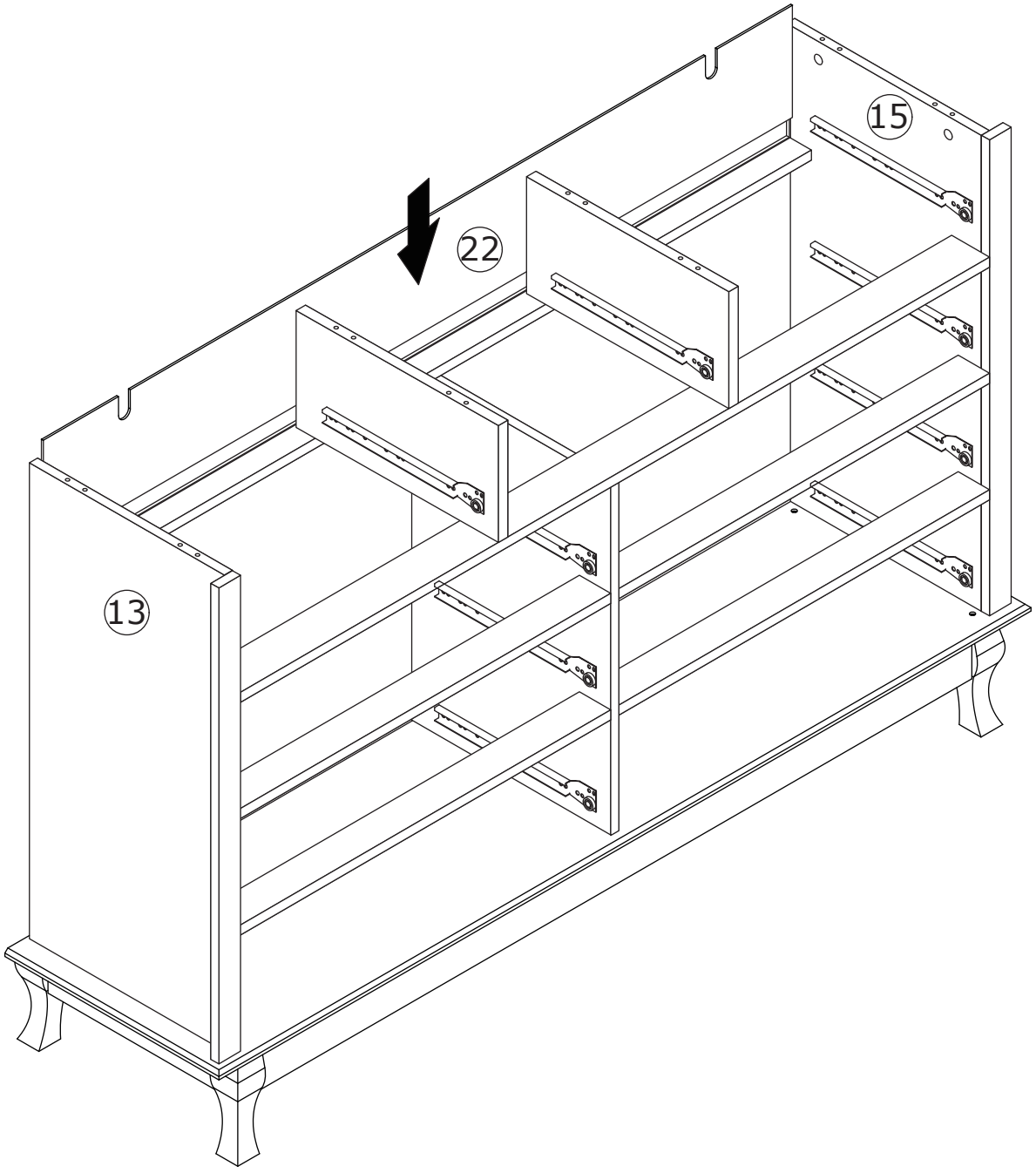

26

B x 8	D x 2	Q x 2	
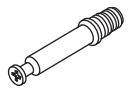 ∅6 x 35 mm	 ∅4 x 12 mm	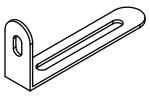	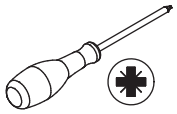

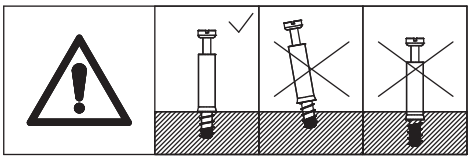

Screw eccentric rod(B) into board 21 as shown.

Fix part(Q) with screw(D).

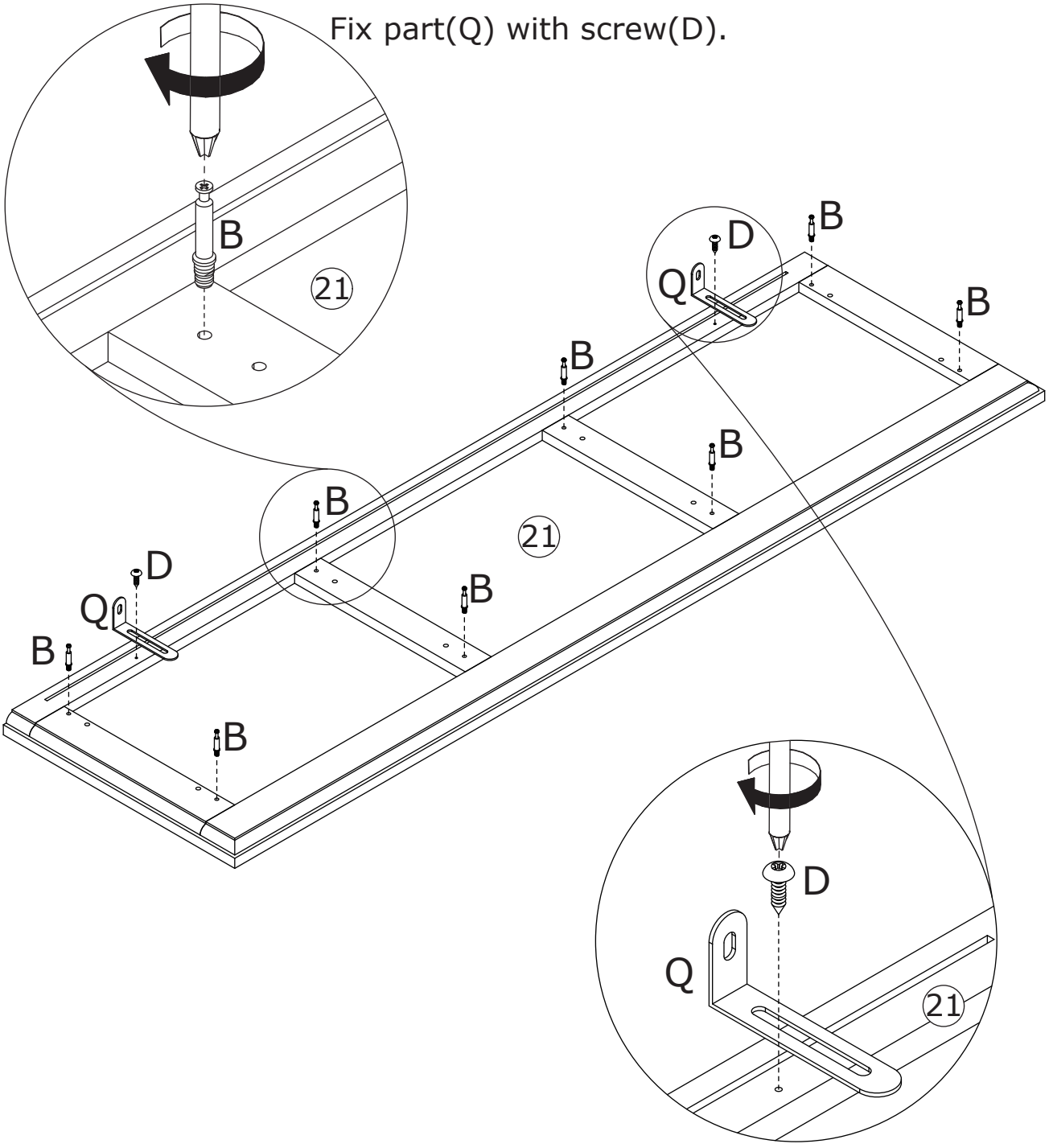

27

A x 8	C x 8	
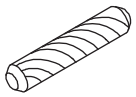	 ∅15 x 10 mm	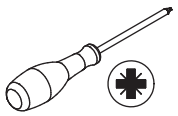

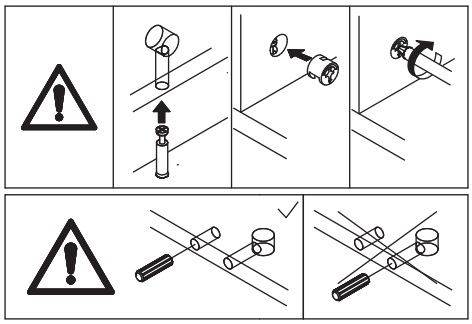

Cover board 21 to the top using wooden dowel(A), add cam lock(C) into board 13, 24,15 and turn clockwise to tighten as shown.

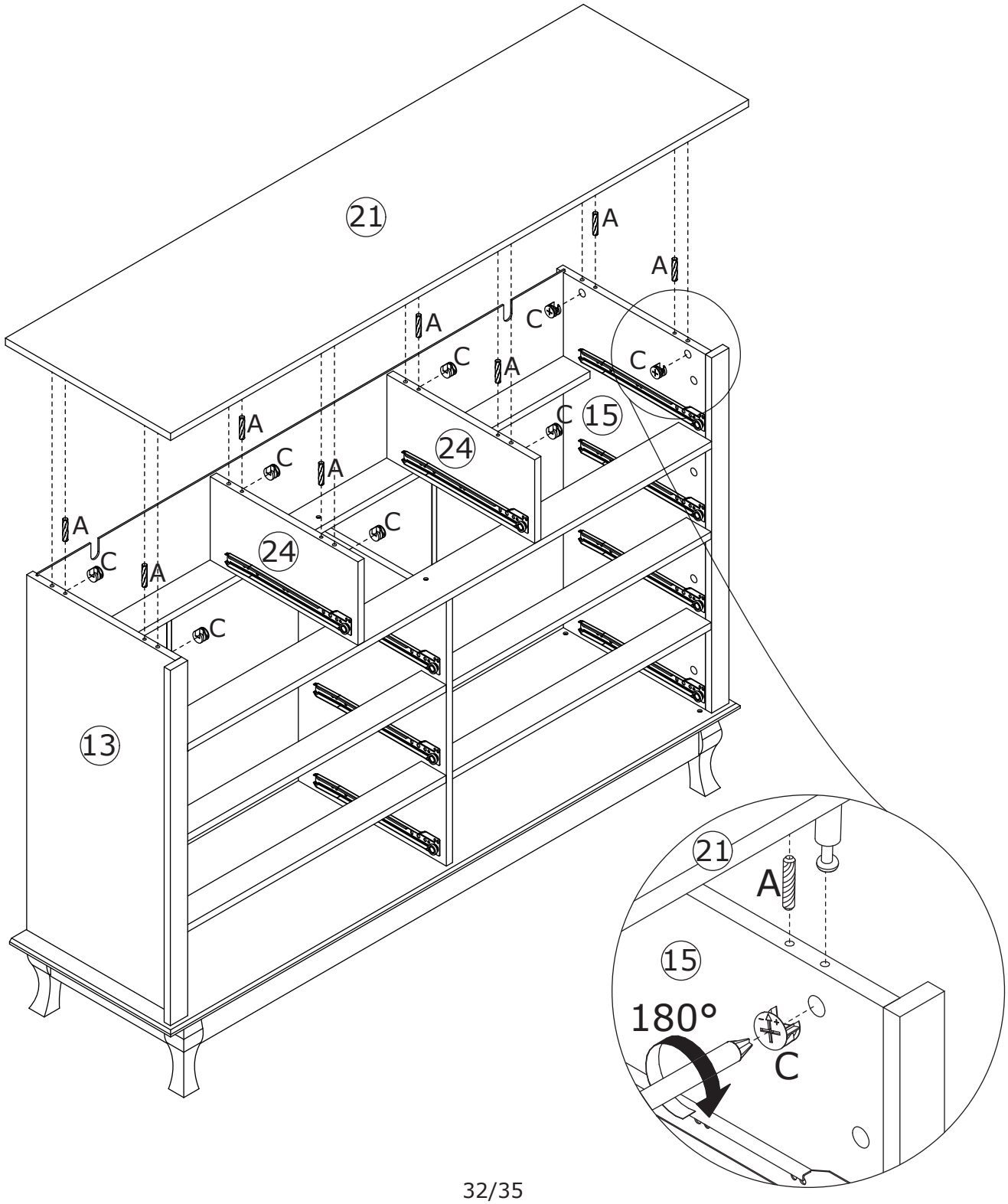

28

L x 14	M x 14	
	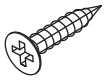 ∅3 x 14 mm	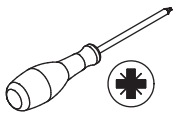

Insert buckle(L) into back slots and fix with screw(M) as shown.

H	M
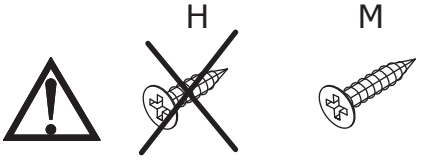	
∅3 x 12 mm	∅3 x 14 mm

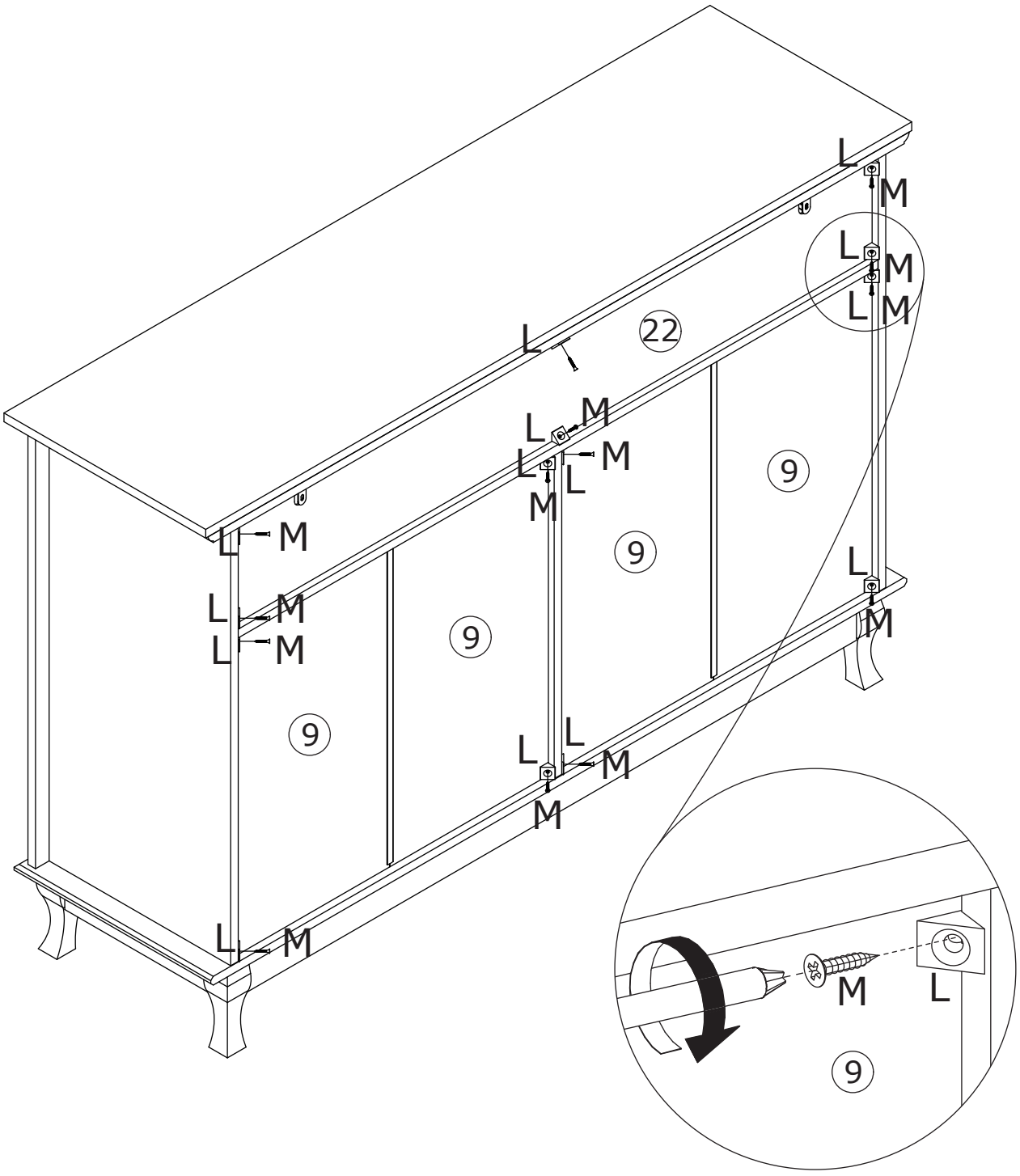

29

K x 2	P x 2	
 ∅ 4 x 35 mm		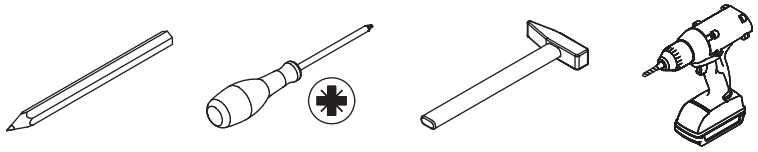

Drill holes on your wall, and install anti-tipping device as shown.

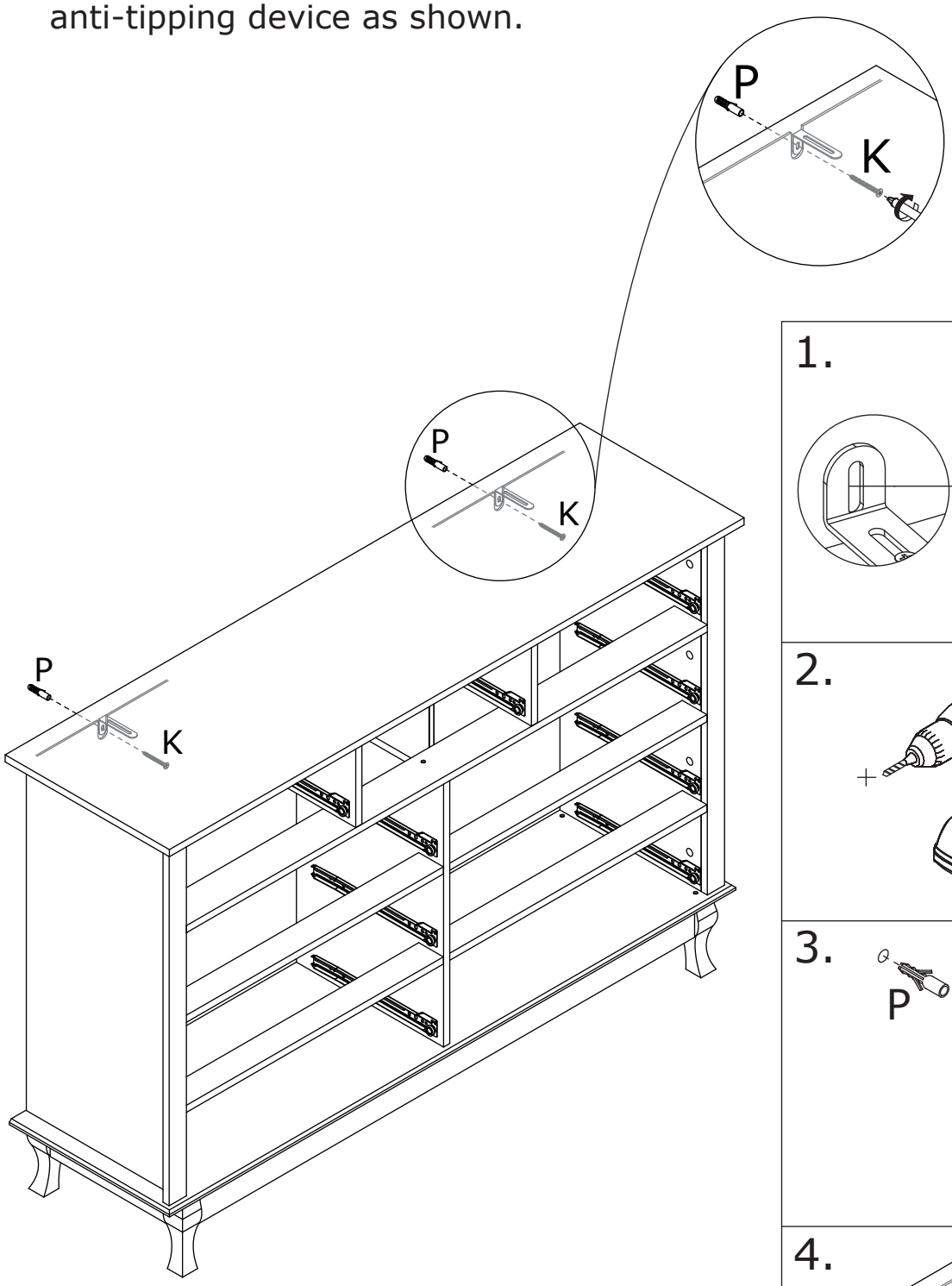

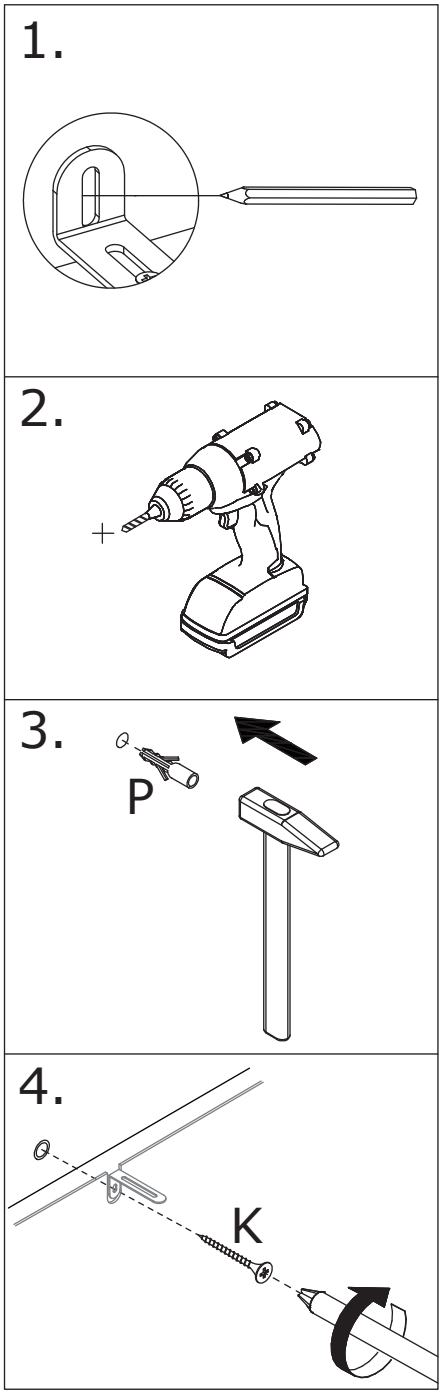

30

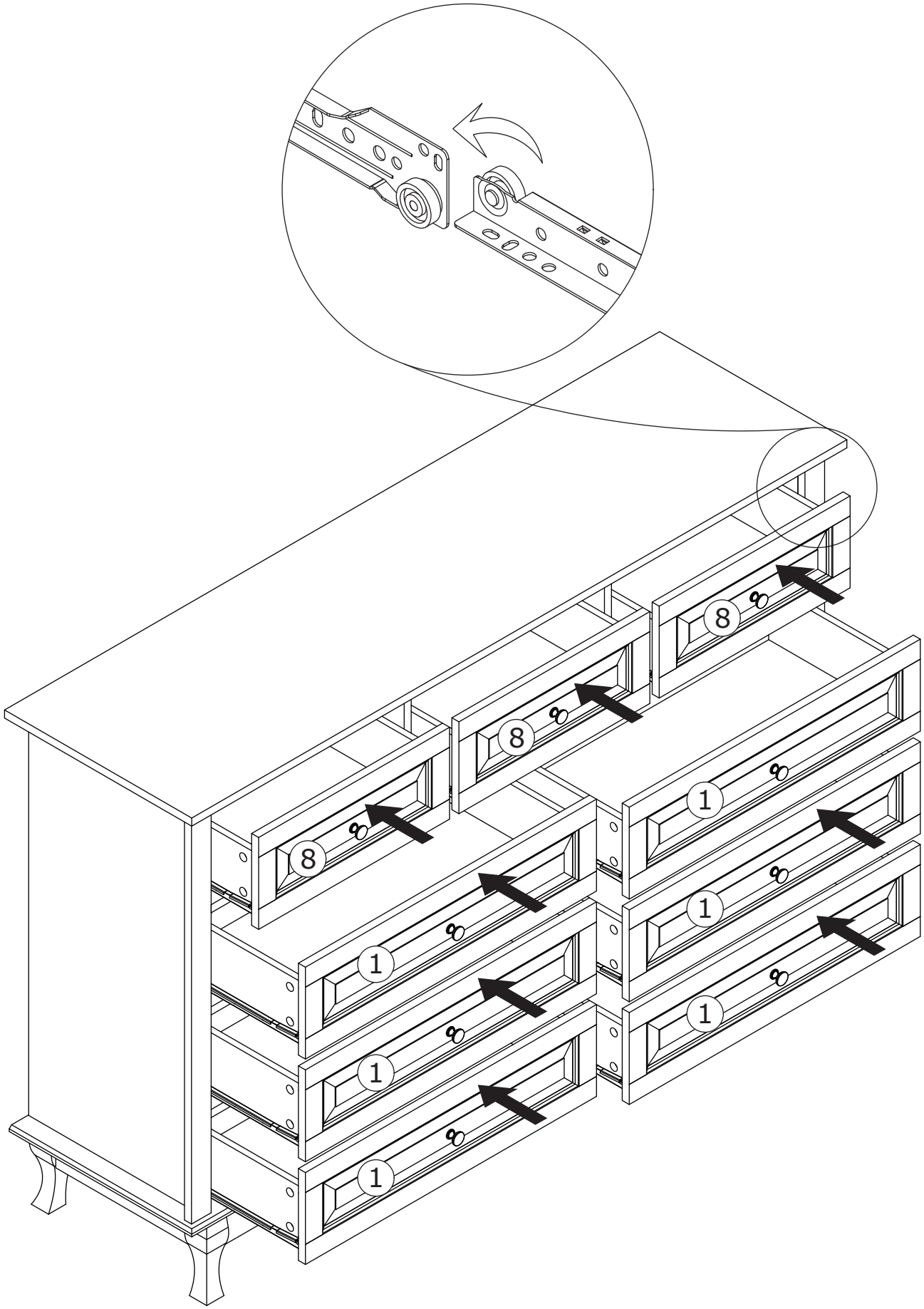

WARRANTY

WARRANTY CLAIMS

- There is a 30-day warranty for broken furniture or any other problems that do not work properly. The warranty will start from the date of purchase which must be verified by proof of purchase.

- Before making a claim, we may be able to answer your query, simply call us. Please leave your purchase order number, along with some details of the problem, if you want a replacement part. We will arrange within 48 hours. If there is out of stock, we will reply with a shipping date.

- The product must be used in accordance with the instructions provided. For health reasons.

- For other reasons, if the furniture needs to be returned, it must be cleaned and dried and operated within 30 days of receipt.

Type of Warranty Claim

- Failure to follow the furniture instructions will invalidate the warranty. Attention please.

- Does not include damage during installation, but includes damage during transportation.

Scope of responsibility

- Shall not bear any responsibility for misuse or user damage and / or loss of parts during the installation of furniture.

- After using, the damage and scratches of the furniture are not covered by the warranty.

The Warranty Relates to All Bought in The Us and Covers The Following Areas

- Sheet parts: 1 month from the date of purchase.

- Electrical parts: 1 month from the date of purchase.

RETURNS

CHANGED YOUR MIND AND NEED TO RETURN YOU ITEM?

PLEASE FOLLOW THE BELOW INSTRUCTIONS:

- If you have purchased and have simply changed your mind, follow the retailer's instructions for returns.

DEFECTIVE ITEMS

- If your item is defective in any way, i.e. it doesn't work but you can't identify why, in the first instance, please call us.

DAMAGED ITEMS

- If you receive an order with obvious shipping damage from the retailer, then we suggest the delivery is refused. If the delivery has been accepted and then shipping damage is found, please follow the specific instructions advised by the retailer.
  In all circumstances please save all packaging material and paperwork for the order. Please be aware that if you dispose of packaging material or attempt to return the merchandise without contacting the fulfiller, you jeopardise your chances of making a claim, and you may not receive a credit for the return.

AFTER-SALES CONTACT



feedbackstation@163.com



(303)800-6387