HOME DECORATORS COLLECTION®

Item #1002545278
#1002545555
Model #GAWA2418
#GAWA2422

REPLACEMENT PARTS LIST

GAZETTE 24 IN. VANITY

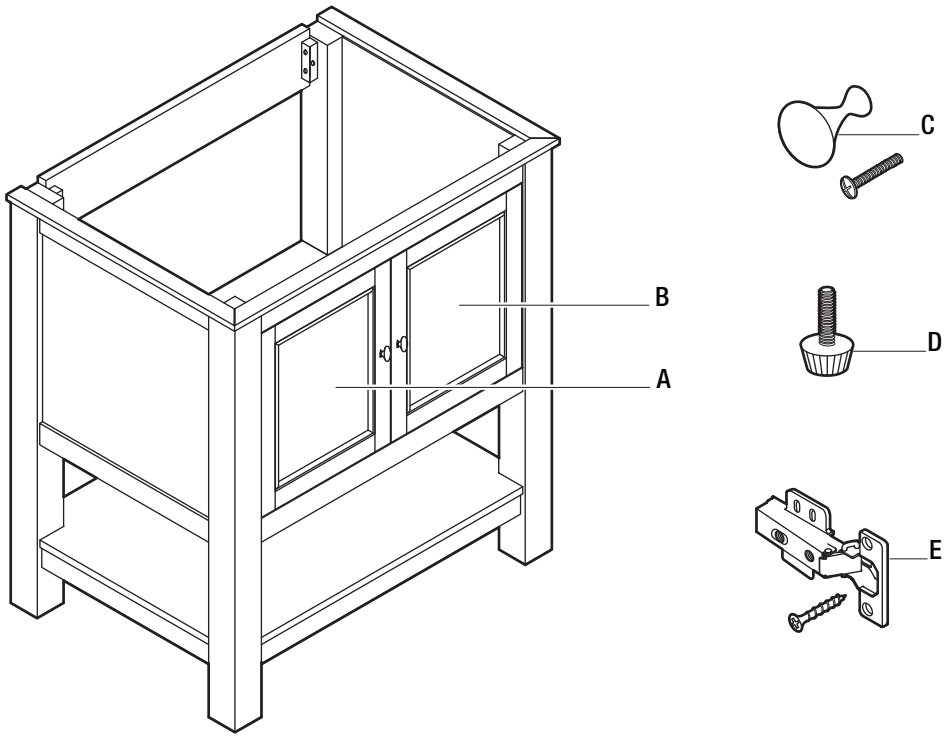

Please use the table below to identify the part number needed, and call FGI Industries, Ltd. Customer Service for your replacement at **888-620-3667.** Our team is available to assist you Monday - Friday, 7:00 A.M. - 5:00 P.M. (CST).

Part	Description	Part #
A	Left Door	PB-GAWA2418-LD
B	Right Door	PB-GAWA2418-RD
C	Knob (1 knob; 1 screw)	PB-KNOB-LS037
D	Leg Leveler	PB-L LEVELLER-JD007
E	Slow Close Hinge (1 hinge; 4 screws)	PB-GAEA-HINGE-HY006