Shark Navigator® Lift-Away®

UV650

OWNER'S GUIDE



IMPORTANT SAFETY INSTRUCTIONS

HOUSEHOLD USE ONLY

To reduce the risk of electric shock, this vacuum cleaner has a polarized plug (one blade is wider than the other). As a safety feature, this plug will fit into a polarized outlet only one way. If the plug does not fit fully into the outlet, reverse the plug. If it still does not fit, contact a qualified electrician. DO NOT force into outlet or try to modify to fit.

⚠ WARNING

TO REDUCE THE RISK OF FIRE, ELECTRIC SHOCK OR INJURY:

GENERAL WARNINGS

When using an electrical appliance, basic precautions should always be followed, including the following:

1. Inspect power cord and plug for any damage before use. **DO NOT** use vacuum cleaner with a damaged cord or plug. Turn off all controls before plugging in or unplugging the vacuum cleaner. Store your vacuum cleaner with the power cord secured around the two cord hooks. To minimize the risk of power cord damage, do not allow the motorized brush roll to ingest the cord. If this occurs, immediately shut off power to the vacuum and remove the cord.
2. Your vacuum cleaner may consist of a motorized nozzle, wand, hose, and/or vacuum pod. This device contains electrical connections, electrical wiring, and moving parts that potentially present risk to the user.
3. Use only identical replacement parts.
4. Carefully observe and follow the instructions provided below to avoid improper use of the appliance. **DO NOT** use the vacuum for any purpose other than those described in this manual.
5. Before use, carefully inspect all parts for any damage. **DO NOT** use if any parts are damaged.
6. The use of an extension cord is **NOT** recommended.
7. This vacuum cleaner contains no serviceable parts.

USE WARNINGS

8. This appliance can be used by persons with reduced physical, sensory or mental capabilities or lack of experience and knowledge if they have been given supervision or instruction concerning use of the appliance in a safe way and understand the hazards involved. Cleaning and user maintenance shall not be made by children. Keep the appliance and its cord out of reach of children. **DO NOT** allow the appliance to be used by children. **DO NOT** allow to be used as a toy. Close supervision is necessary when used near children.
9. Always turn off the vacuum cleaner before connecting or disconnecting any motorized nozzles or other accessories.
10. **DO NOT** handle plug or vacuum cleaner with wet hands.
11. **DO NOT** use without filters in place.
12. Only use Shark® branded filters and accessories.
13. **DO NOT** damage the power cord:
    - **a)** **DO NOT** pull or carry vacuum cleaner by the cord or use the cord as a handle.
    - **b)** **DO NOT** unplug by pulling on cord. Grasp the plug, not the cord.
    - **c)** **DO NOT** run the vacuum cleaner over the power cord, close a door on the cord, pull the cord around sharp corners, or leave the cord near heated surfaces.

SAVE THESE INSTRUCTIONS

READ ALL INSTRUCTIONS BEFORE USE

14. **DO NOT** put any objects into nozzle or accessory openings. **DO NOT** use with any opening blocked; keep free of dust, lint, hair, and anything that may reduce airflow.
15. **DO NOT** use if nozzle or accessory airflow is restricted. If the air paths or the motorized floor nozzle become blocked, turn the vacuum cleaner off and unplug from electrical outlet. Remove all obstructions before you plug in and turn on the unit again.
16. Keep nozzle and all vacuum openings away from hair, face, fingers, uncovered feet, or loose clothing.
17. **DO NOT** use if vacuum cleaner is not working as it should, or has been dropped, damaged, left outdoors, or dropped into water.
18. Use extra care when cleaning on stairs.
19. **DO NOT** leave the vacuum cleaner unattended while plugged in.
20. When powered on, keep the vacuum cleaner moving over the carpet surface at all times to avoid damaging the carpet fibers.
21. **DO NOT** place vacuum cleaner on unstable surfaces such as chairs or tables.
22. Your Shark® vacuum may not be designed to stand up on its own. When taking a break from cleaning, you may need to lean it against furniture or a wall, or lay it flat on the floor. Using the vacuum for an application where the unit lacks stability may result in personal injury.
23. **DO NOT** use to pick up:
    - **a)** Liquids
    - **b)** Large objects
    - **c)** Hard or sharp objects (glass, nails, screws, or coins)
    - **d)** Large quantities of dust (drywall dust, fireplace ash, or embers). **DO NOT** use as an attachment to power tools for dust collection.
    - **e)** Smoking or burning objects (hot coals, cigarette butts, or matches)
    - **f)** Flammable or combustible materials (lighter fluid, gasoline, or kerosene)
    - **g)** Toxic materials (chlorine bleach, ammonia, or drain cleaner)
24. **DO NOT** use in the following areas:
    - **a)** Poorly lit areas
    - **b)** Wet or damp surfaces
    - **c)** Outdoor areas
    - **d)** Spaces that are enclosed and may contain explosive or toxic fumes or vapors (lighter fluid, gasoline, kerosene, paint, paint thinners, mothproofing substances, or flammable dust)
25. Turn off all controls before plugging in or unplugging the vacuum.
26. Unplug from electrical outlet when not in use and before any maintenance or cleaning.
27. Hand wash with water only. Washing with cleaning chemicals could damage the unit.
28. During cleaning or routine maintenance, **DO NOT** cut anything other than hair, fibers, or string wrapped around the brushroll.
29. Allow all filters to air-dry completely before replacing in the vacuum to prevent liquid from being drawn into electric parts.
30. Make sure the dust cup and all filters are in place after routine maintenance.
31. If provided, secure the power cord around the two cord hooks during storage.

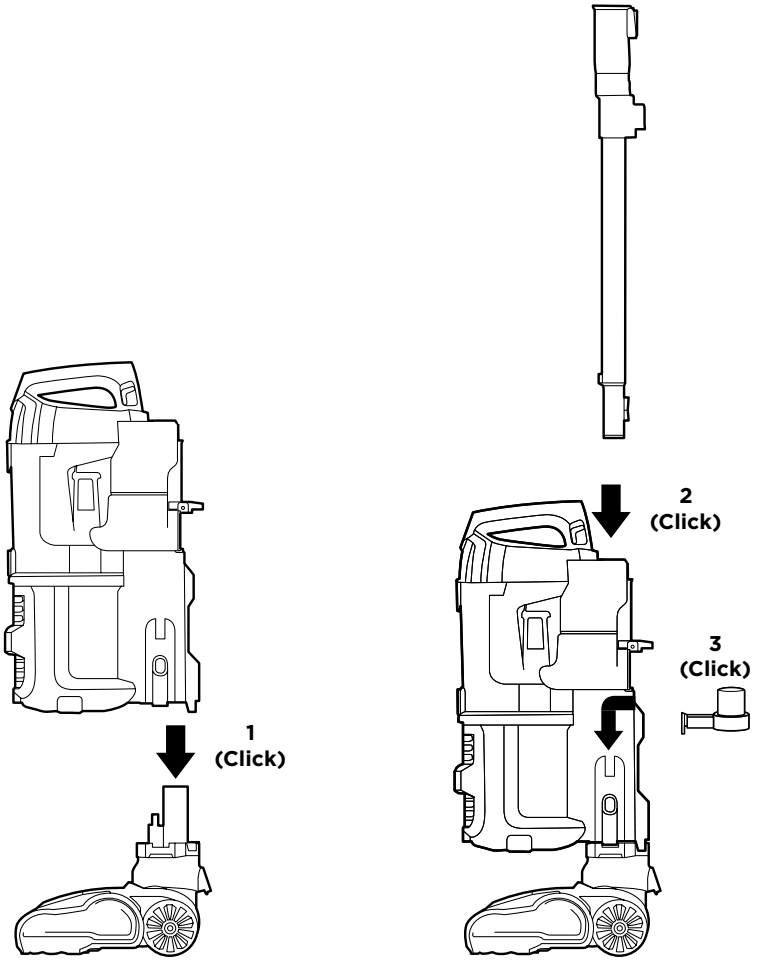

1. Place **Pod** onto **Floor Nozzle Post.**
2. Insert **Wand** into pod.
3. Attach bottom **Accessory Holder** onto pod.
4. Insert **Handle** into wand.
5. Attach **Hose Clip** to wand.
6. Connect **Hose** to back of pod.

For proper operation, ensure all parts are firmly clicked into place.

ASSEMBLY

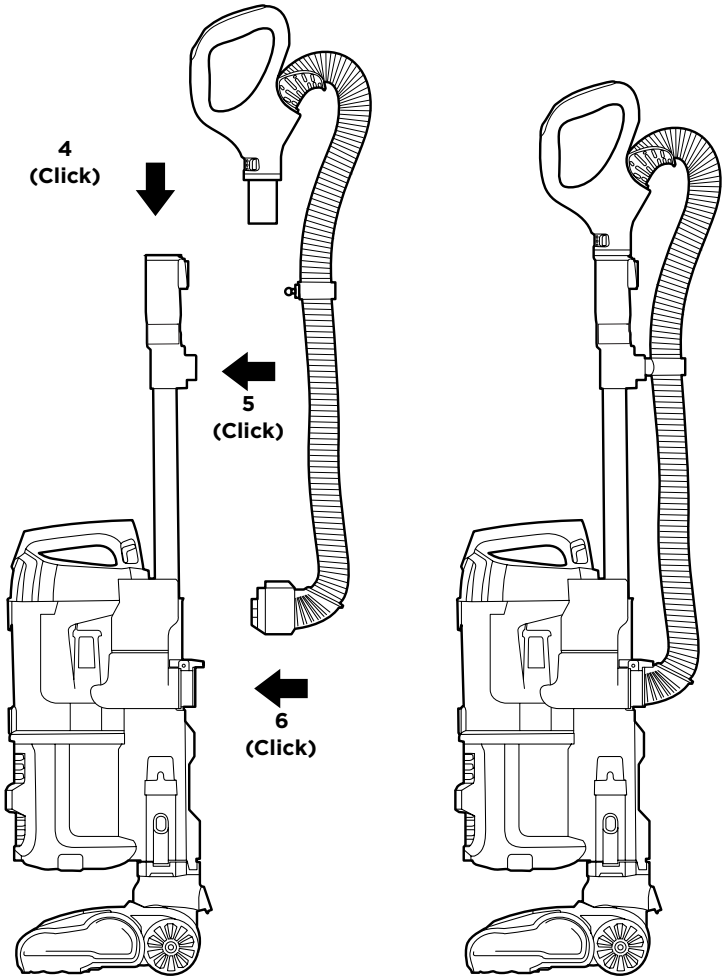

SETTINGS

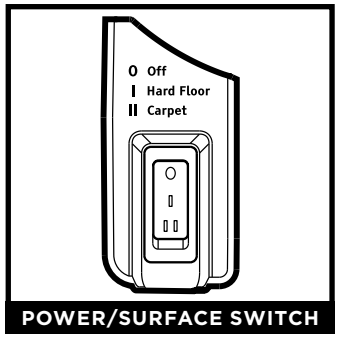

POWER/SURFACE SWITCH

Select surface setting:

O Off

I Hard Floor
For bare floors and area rugs.

II Carpet
For high pile carpets.

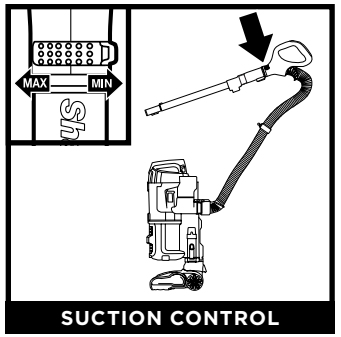

SUCTION CONTROL

The **Suction Control Slider** located on the handle allows you to adjust the suction depending on the floor type.
MIN: to reduce suction and increase maneuverability on carpets.
MAX: to increase suction on bare floors.

NOTE: The brushroll spins in Carpet mode only.

BRUSHROLL INDICATOR LIGHT

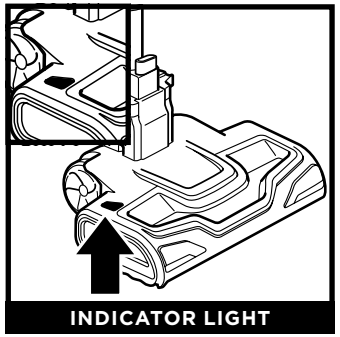

INDICATOR LIGHT

WHAT DOES THE BRUSHROLL INDICATOR LIGHT MEAN?

Solid Green: The brushroll is spinning and working as it should.

Solid Red: There is a jam in the brushroll area. Turn your vacuum off and remove any blockages in the nozzle.

Flashing Red: The motorized floor nozzle is overheating. Turn off the vacuum, unplug it, and remove any blockages. Let the vacuum cool down for at least 60 minutes before restarting. See Troubleshooting section for more information.

NOTE: For deep carpet cleaning per ASTM F608 (embedded dirt in carpets), set to **MAX** suction and use setting **II**, **Carpet**.

CLEANING MODES

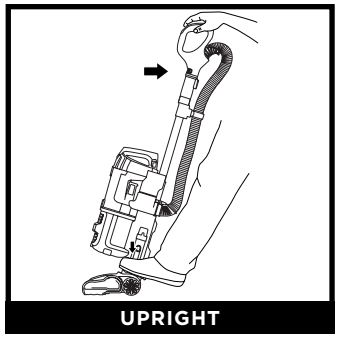

UPRIGHT

To engage brushroll, place foot on floor nozzle and tilt handle back.

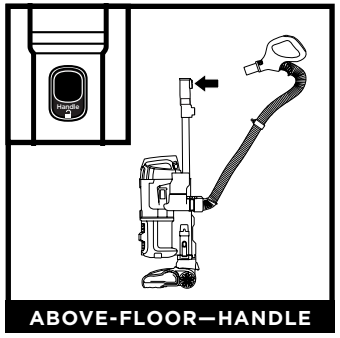

ABOVE-FLOOR—HANDLE

Press the **Handle Release** button to detach the handle from the wand.

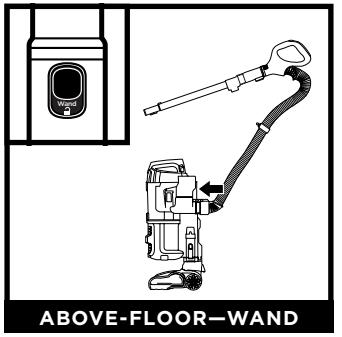

ABOVE-FLOOR—WAND

Press the **Wand Release** button to detach the wand from the pod.

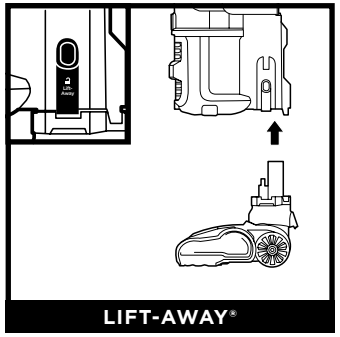

LIFT-AWAY®

Press the **Lift-Away** button to detach the pod from the floor nozzle.

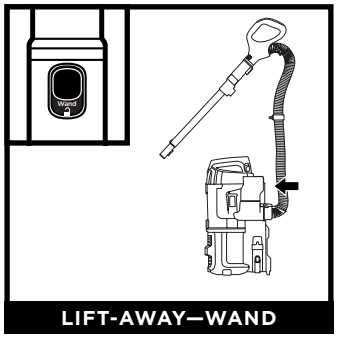

LIFT-AWAY—WAND

With pod removed, press the **Wand Release** button to detach the wand from the pod.

NOTE: All accessories are compatible with both the wand and the handle.

EMPTYING THE DUST CUP

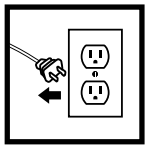

IMPORTANT: Unplug the power cord before performing any maintenance.

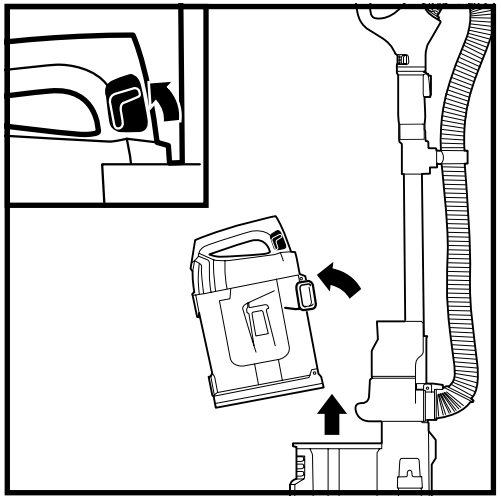

To remove **Dust Cup**, slide up release tabs on both sides of dust cup handle. Tilt dust cup forward, then lift to remove.

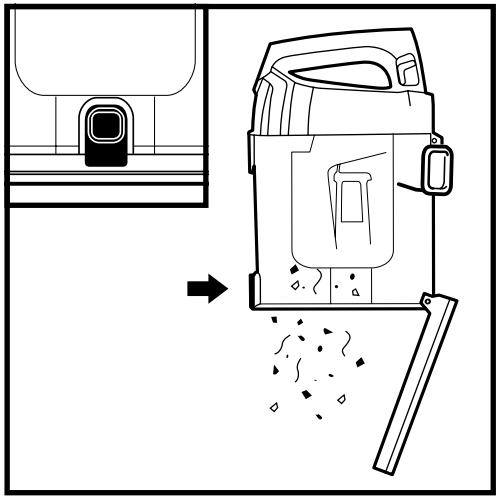

Press lower release button to open bottom of dust cup.

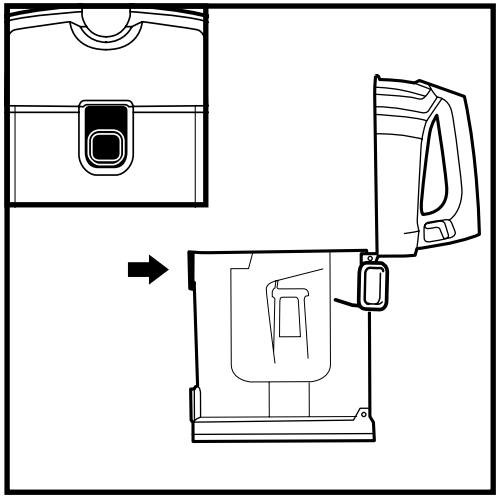

To remove collected debris from **Lint Screen**, press top release button and lift handle to open. Gently brush lint screen to clean.

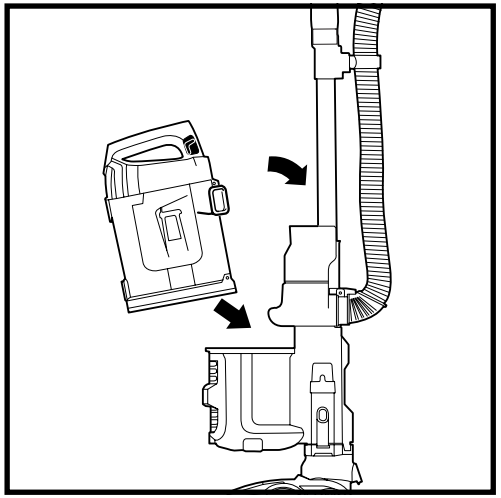

To reinstall, place bottom of dust cup into pod and then tilt back until it clicks into place.

CLEANING THE FILTERS

CLEANING FILTERS

Regularly clean and replace the filters to keep your vacuum's suction power optimal.

To clean filters, rinse with cold water only to prevent damage from cleaning chemicals. Allow all filters to air-dry for at least 24 hours before reinstalling them to prevent liquid from being drawn into electric parts.

IMPORTANT: DO NOT use soap when cleaning the filters.

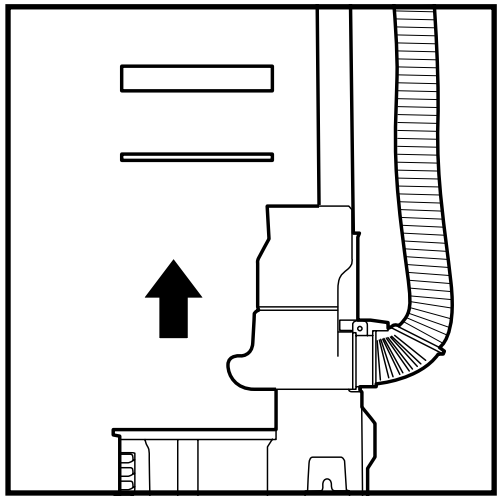

CLEAN PRE-MOTOR FILTERS
EVERY 3 MONTHS

Remove the dust cup, then lift out the **Pre-Motor Filters.**

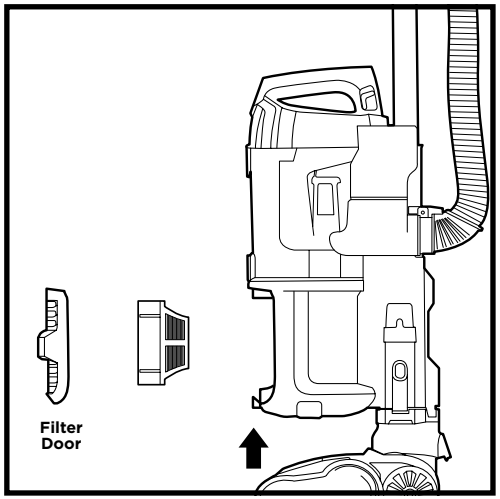

CLEAN HEPA FILTER
EVERY YEAR

To remove **HEPA Filter,** first take off dust cup. Tilt **Filter Door,** then firmly pull it off. Press tab at top of filter and pull out filter.

To reinstall, insert top part of HEPA filter first, then bottom. To replace filter door, insert top part with tabs first, then push in bottom until it clicks into place.

REPLACING FILTERS

Follow the previous instructions for removing filters. The **Pre-Motor Filter** should be replaced every 2.5 years. The **HEPA Filter** should be replaced every 3 years.

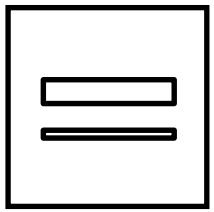

Replacement Pre-Motor Foam & Felt Filter Kit
XFFK560

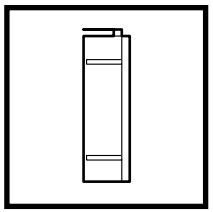

Replacement HEPA Filter
XHEPA560

NOTE: To order replacement parts and filters, visit **sharkaccessories.com**.

MAINTENANCE

CLEANING THE BRUSHROLL

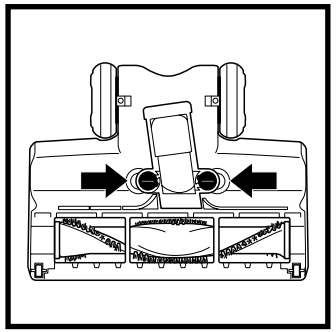

Using a coin, turn locks counterclockwise to open, then lift off cover to access brushroll.

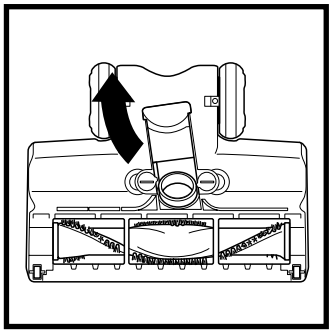

Squeeze tabs together and pull up to expose the airway.

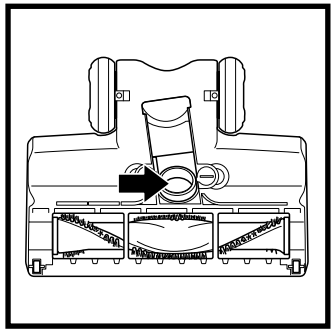

Clear blockages from airway. Replace cover, pressing down firmly on all sides before turning locks clockwise to close.

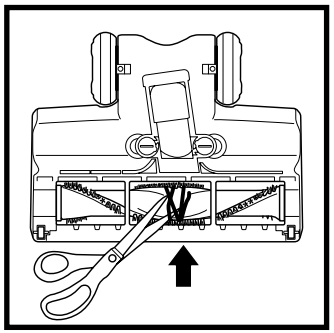

Use scissors to remove any string, carpet fibers, or hair that is wrapped around the brushroll.

CORD MAINTENANCE

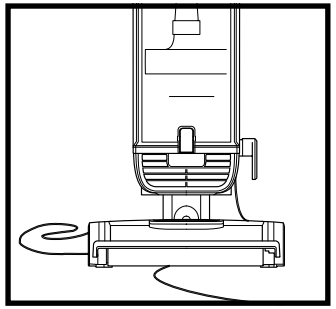

To minimize the risk of power cord damage, **DO NOT** run the vacuum over the power cord. If this occurs, immediately shut off power to the vacuum and remove the cord from the brushroll or nozzle.

1. **DO NOT** pull or carry vacuum cleaner by the cord or use cord as a handle.
2. **DO NOT** unplug by pulling on the cord. Grasp the plug, not the cord.
3. **DO NOT** close the door on the cord.
4. **DO NOT** pull the cord around sharp corners.
5. **DO NOT** leave the cord near heated surfaces.

CHECKING FOR BLOCKAGES

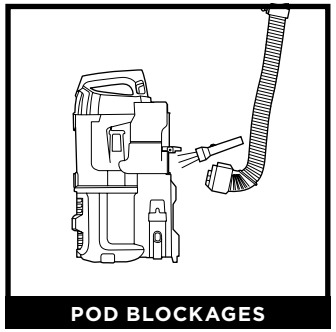

POD BLOCKAGES

Detach hose from vacuum pod, and check hose and opening on back of pod for blockages.

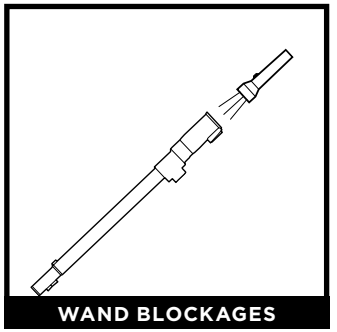

WAND BLOCKAGES

Detach wand from floor nozzle and handle, and check both ends for blockages.

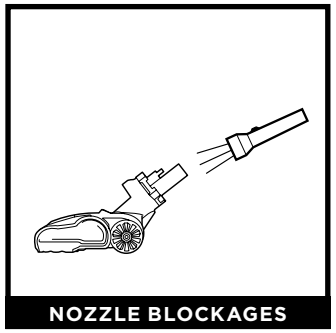

NOZZLE BLOCKAGES

Detach pod from floor nozzle, tilt nozzle neck back, and check opening for blockages.

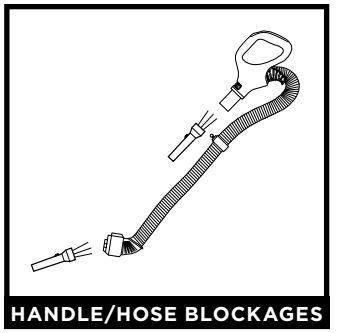

HANDLE/HOSE BLOCKAGES

Detach handle from wand and hose from the vacuum pod, and check openings for blockages.

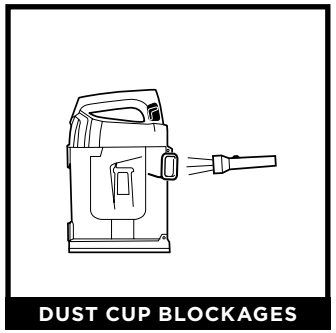

DUST CUP BLOCKAGES

Detach dust cup from vacuum pod. Empty dust cup, remove debris from lint screen, and check for blockages.

AVAILABLE ACCESSORIES

A Crevice Tool
This slim tool is great for cleaning in tight spaces, between couch cushions, and in hard-to-reach areas.

B Dusting Brush
This brush dusts and cleans delicate surfaces. Great for use on fans, blinds, lampshades, and keyboards.

C Upholstery Tool
Picks up pet hair, dust, and large debris from mattresses, couches, curtains, and other delicate upholstered fabrics.

D Pet Hair Tool
The turbine brush loosens and removes pet hair and debris from carpets, and powerfully deep-cleans dander out of upholstery and other surfaces.

E Duster Crevice Tool
Two cleaning tools in one. The crevice tool gives you extended reach to clean in tight spaces, while the soft brush is ideal for dusting delicate surfaces.

F Anti-Allergen Dust Brush
This brush features nylon fiber bristles specifically designed for removing fine dust and allergen particles from the most delicate surfaces.

G Under-Appliance Wand
Clean under and behind hard-to-move appliances and furniture with this adjustable 36” tool. Flip the extension piece over to clean the underside of appliances.

H Large Accessory Bag
This convenient accessory storage bag measures 32 cm x 70 cm and fits the Under-Appliance Wand. Smaller size available at sharkaccessories.com.

A

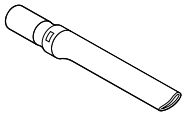

B



C

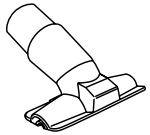

D



E



F

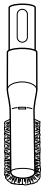

G

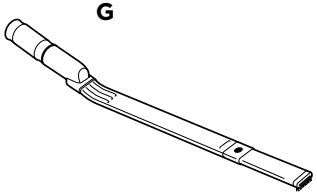

H



NOTE: Not all accessories come with all units. Please see the enclosed Quick Start Guide for your unit's configuration. To order additional accessories, visit **sharkaccessories.com**.

TROUBLESHOOTING

Power cord caught in brushroll or floor nozzle.

- To minimize the risk of power cord damage, DO NOT run the vacuum over the power cord. If this occurs, immediately shut off power to the vacuum and remove the cord from the brushroll or nozzle.
- Inspect power cord and plug for any damage before use. DO NOT use vacuum cleaner with a damaged cord or plug. Turn off all controls before plugging in or unplugging the vacuum cleaner. Store your vacuum cleaner with the power cord secured around the two cord hooks.

Vacuum is not picking up debris. No suction or light suction.

- Check filters to see if they need cleaning. Follow instructions for rinsing and air-drying the filters before reinserting in the vacuum.
- Dust cup may be full; empty dust cup.
- Check hose, hose connections, nozzle, wand, pod, and accessories for blockages. Clear any blockages found.

(Refer to Checking for Blockages section for more information.)

Vacuum lifts area rugs.

- Make sure Power/Surface switch is set to Hard Floor (setting I).
- Suction is powerful. Take care when vacuuming area rugs or rugs with delicately sewn edges.
- To minimize suction, slide the suction control valve to MIN.

Brushroll does not spin.

- If the Brushroll Indicator Light turns red, immediately turn off and unplug the vacuum. Remove pod from floor nozzle and clear any blockages. Reconnect nozzle, plug in vacuum, and turn on power.
- Set the Power/Surface switch to position II, Carpet.
- Step on the floor nozzle and recline the handle to activate the brushroll.
- If brushroll repeatedly stops spinning on plush or high-pile carpet, slide suction control to MIN.

Vacuum turns off on its own or indicator light flashes red.

This vacuum is equipped with a motor-protective thermostat. If your vacuum overheats, the thermostat will automatically turn the suction motor off. Perform the following steps to restart the thermostat:

1. Turn vacuum off and unplug it.
2. Empty dust cup and clean filters (see Emptying the Dust Cup and Cleaning the Filters).
3. Check for blockages in hose, accessories, and inlet openings.
4. Allow unit to cool for a minimum of 60 minutes.
5. Plug in vacuum and turn it on.

FIVE (5) YEAR LIMITED WARRANTY

The Five (5) Year Limited Warranty applies to purchases made from authorized retailers of **SharkNinja Operating LLC.** Warranty coverage applies to the original owner and to the original product only and is not transferable.

SharkNinja warrants that the unit shall be free from defects in material and workmanship for a period of five (5) years from the date of purchase when it is used under normal household conditions and maintained according to the requirements outlined in the Owner's Guide, subject to the following conditions and exclusions:

What is covered by this warranty?

1. The original unit and/or non-wearable components deemed defective, in SharkNinja's sole discretion, will be repaired or replaced up to five (5) years from the original purchase date.
2. In the event a replacement unit is issued, the warranty coverage ends six (6) months following the receipt date of the replacement unit or the remainder of the existing warranty, whichever is later. SharkNinja reserves the right to replace the unit with one of equal or greater value.

What is not covered by this warranty?

1. Normal wear and tear of wearable parts (such as foam filters, HEPA filters, pads, etc.), which require regular maintenance and/or replacement to ensure the proper functioning of your unit, are not covered by this warranty. Replacement parts are available for purchase at **sharkaccessories.com**.
2. Any unit that has been tampered with or used for commercial purposes.
3. Damage caused by misuse (e.g., vacuuming up water or other liquids), abuse, negligent handling, failure to perform required maintenance (e.g., not cleaning the filters), or damage due to mishandling in transit.
4. Consequential and incidental damages.
5. Defects caused by repair persons not authorized by SharkNinja. These defects include damages caused in the process of shipping, altering, or repairing the SharkNinja product (or any of its parts) when the repair is performed by a repair person not authorized by SharkNinja.
6. Products purchased, used, or operated outside North America.

How to get service

If your appliance fails to operate properly while in use under normal household conditions within the warranty period, visit **sharkclean.com/support** for product care and maintenance self-help. Our Customer Service Specialists are also available at **1-800-798-7398** to assist with product support and warranty service options, including the possibility of upgrading to our VIP warranty service options for select product categories. So we may better assist you, please register your product online at registeryourshark.com and have the product on hand when you call.

SharkNinja will cover the cost for the customer to send in the unit to us for repair or replacement. A fee of $24.95 (subject to change) will be charged when SharkNinja ships the repaired or replacement unit.

How to initiate a warranty claim

You must call **1-800-798-7398** to initiate a warranty claim. You will need the receipt as proof of purchase. We also ask that you register your product online at registeryourshark.com and have the product on hand when you call, so we may better assist you. A Customer Service Specialist will provide you with return and packing instruction information.

How state law applies

This warranty gives you specific legal rights, and you also may have other rights that vary from state to state. Some states do not permit the exclusion or limitation of incidental or consequential damages, so the above may not apply to you.

REGISTER YOUR PURCHASE

registeryourshark.com

Scan QR code using mobile device

Benefits of registering your product and creating an account:

- Get easier, faster product support and access to warranty information
- Access troubleshooting and product care instructions
- Be among the first to know about exclusive product promotions

RECORD THIS INFORMATION

Model Number: _____

Serial Number: _____

Date of Purchase: _____
(Keep receipt)

Store of Purchase: _____

TIP: You can find the model and serial numbers on the QR code label on the bottom of the back of the vacuum pod.

TECHNICAL SPECIFICATIONS

Voltage: 120V, ~ 60Hz

Watts: 800W

PLEASE READ CAREFULLY AND KEEP FOR FUTURE REFERENCE.

This Owner's Guide is designed to help you get a complete understanding of your new Shark Navigator® Lift-Away®.

SharkNinja Operating LLC
US: Needham, MA 02494

1-800-798-7398
sharkclean.com

Illustrations may differ from actual product. We are constantly striving to improve our products; therefore the specifications contained herein are subject to change without notice.

For SharkNinja U.S. Patent information, visit sharkninja.com/uspatents

---

© 2020 SharkNinja Operating LLC. LIFT-AWAY, SHARK, and SHARK NAVIGATOR are registered trademarks of SharkNinja Operating LLC.

UV650_IB_MP_Mv9
PRINTED IN CHINA



@sharkcleaning