ELECTRIC STOVE WITH HEATER

VENT FREE DECORATIVE ELECTRIC STOVE

HOMEOWNERS OPERATING MANUAL

MODELS: DFS-750-1, DFS-750-6

CONSUMER SAFETY INFORMATION

PLEASE READ THIS MANUAL BEFORE INSTALLING AND OPERATING THIS APPLIANCE

WARNING!!

IF THE INFORMATION IN THIS MANUAL IS NOT FOLLOWED EXACTLY, AN ELECTRIC SHOCK OR FIRE MAY RESULT CAUSING PROPERTY DAMAGE, PERSONAL INJURY OR LOSS OF LIFE.

DO NOT STORE OR USE GASOLINE OR OTHER FLAMMABLE VAPORS AND LIQUIDS IN THE VICINITY OF THIS OR ANY OTHER APPLIANCE.

Thank you and congratulations on your purchase of a Twin-Star International, Inc. stove. Please read the Installation & Operating Instructions before using this appliance.

IMPORTANT: Read all instructions and warnings carefully before starting installation. Failure to follow these instructions may result in a possible electric shock, fire hazard and/or injury and will void the warranty.

Installation of Electric Fireplace, should take 15 minutes. The only tool required is a Phillips head screwdriver, not supplied with this unit.

For Customer Service:

www.twinstarhome.com
In English Call: 800-318-9373
In French Call: 800-318-9374
In Spanish Call: 800-318-9373

WARNING: THIS IS AN UNVENTED, ELECTRIC APPLIANCE. DO NOT ATTEMPT TO BURN WOOD OR MANUFACTURED FIRELOGS IN OR ON THIS APPLIANCE OR GRATE.

Distributed by Twin-Star International, Inc. Under license. duraflame™ and the duraflame flame logo are trademarks of Duraflame, Inc.

Twin-Star International, Inc.
Delray Beach, FL 33445
Made in China • Printed in China

Made in China
Printed in China

IMPORTANT INSTRUCTIONS

When using electrical appliances, basic precautions should always be followed to reduce the risk of fire, electrical shock, and injury to persons including the following:

1. Read all instructions before using this appliance.
2. This appliance is hot when in use. To avoid burns, do not let bare skin touch hot surfaces. If provided, use handles when moving this appliance. Keep combustible materials, such as furniture, pillows, bedding, papers, clothes and curtains at least 3 feet (0.9 m) from the front of this appliance.
   WARNING: In order to avoid overheating, do not cover the heater. It cannot be used in a wardrobe.
3. CAUTION: Whenever the heater is left operating and unattended, extreme caution is necessary if children or invalids are nearby.
4. The appliance is not to be used by children or persons with reduced physical, sensory or mental capabilities, or lack of experience and knowledge, unless they have been given supervision or instruction.
5. Children being supervised not to play with the appliance.
6. If possible, always unplug this appliance when not in use.
7. Do not operate any heater with a damaged cord or plug or after the appliance malfunctions, or if it has been dropped or damaged in any manner.
8. If the supply cord is damaged, it must be replaced by the manufacturer, its service agent or similarly qualified persons in order to avoid a hazard.
9. Any repairs to this fireplace should be carried out by a qualified service person.
10. Under no circumstance should this fireplace be modified. Parts having to be removed for servicing must be replaced prior to operating this fireplace again.
11. Do not use outdoors.
12. This heater is not intended for use in bathrooms, laundry areas and similar indoor locations. Never locate this appliance where it may fall into a bathtub or other water container.
13. Do not run cord under carpeting. Do not cover cord with throw rugs, runners or the like. Arrange cord away from traffic areas and where it will not be tripped over.
14. To disconnect this appliance, turn controls to the off position, then remove plug from outlet.
15. Connect to properly grounded outlets only.
16. This appliance, when installed, must be electrically grounded in accordance with local codes or, in the absence of local codes, with the current CSA C22.1 Canadian Electrical Code or for U.S.A. installations, follow local codes and the National Electrical Code, ANSI/NFPA NO.70.
17. There is a thermostat limiter inside the heater. When the inner temperature over heating or occurs abnormal heating, the thermostat protective device would cut off power supply to avoid the fireplace damaged or risk of fire.
18. The heaters must not be located immediately below a socket-outlet.
19. Do not insert or allow foreign objects to enter any ventilation or exhaust opening as this may cause an electric shock or fire, or damage the appliance.
20. To prevent a possible fire, do not block air intakes or exhaust in any manner. Do not use on soft surfaces, like a bed, where opening may become blocked.
21. This appliance has hot and arcing or sparking parts inside. Do not use it in areas where gasoline, paint or flammable liquids are used or stored. This fireplace should not be used as a drying rack for clothing. Christmas stockings or decorations should not be hung in the area of it.
22. Use this appliance only as described in the manual. Any other use not recommended by the manufacturer may cause fire, electric shock or injury to persons.
23. Avoid the use of an extension cord because the extension cord may overheat and cause risk of fire. However, if you have to use an extension cord, the cord must be No.14 AWG minimum size and rated not less than 1875 Watts. The extension cord must be a three wire cord with grounding type plug and cord connection. The extension cord shall not be more than 20 feet (6 m) in length.
24. See directions in Figure 1.
    This heater is for use on 120 volts. The cord has a plug as shown in figure 1. See Figure 1 for grounding instruction. An adapter as shown at C is available for connecting three-blade grounding type plugs to two-slot receptacles. The green grounding plug extending from the adapter must be connected to a permanent ground such as a properly grounded outlet box. The adapter should not be used if a three-slot grounded receptacle is available.

Figure 1

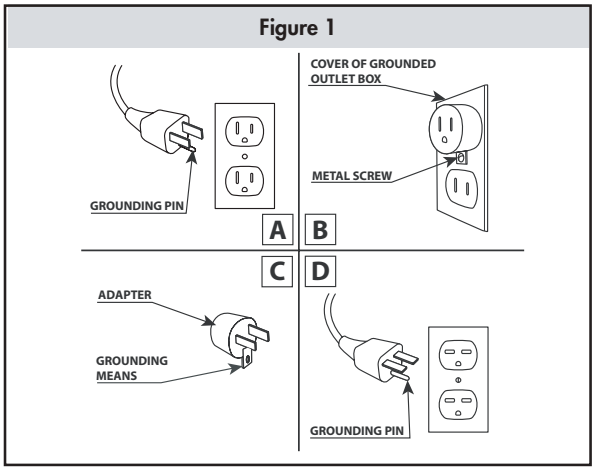

SAVE THESE INSTRUCTIONS

PRODUCT SPECIFICATIONS

VOLTAGE	AMPS	WATTS
120 VAC, 60 Hz	12.5 Amps	1500 Watts

PACKAGE CONTENTS

CAUTION
To avoid injury from unexpected starting or electrical shock, do not plug the power cord into a source of power during unpacking and assembly. The cord must remain unplugged whenever you are adjusting/assembling the fireplace.
If any part is missing or damaged, do not attempt to use or plug in the power cord until the missing or damaged part is correctly replaced. To avoid electric shock, use only identical replacement parts when servicing double-insulated tools.

Part	Description	Quantity	Picture
AA	Stove Body	1	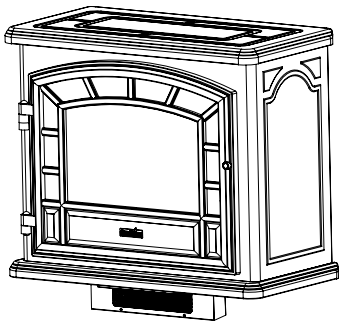
BB	Remote Control and batteries	1	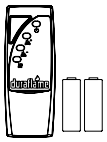
CC	Stove Legs	4	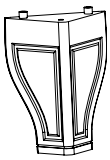
DD	Screws for Legs	12	
EE	Door Pull	1	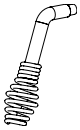
FF	Door pull bolt and washer	2	

Fig. 2

PREPARATION

Before beginning installation of the product, make sure all parts are present. Compare parts with package contents list and diagrams above. If any part is missing or damaged, do not attempt to assemble, install, or operate the product. Contact customer service for replacement parts.

Estimated Assembly Time: 15 minutes
Tools Required for Assembly: (not included)

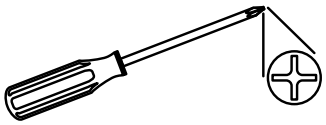

MOUNTING LEGS TO THE STOVE BODY

Insert the legs into the holes located on the base of the stove. Fasten the legs using the screws (3 screws per leg) and tighten with a Phillips hand screwdriver (Fig. 3).

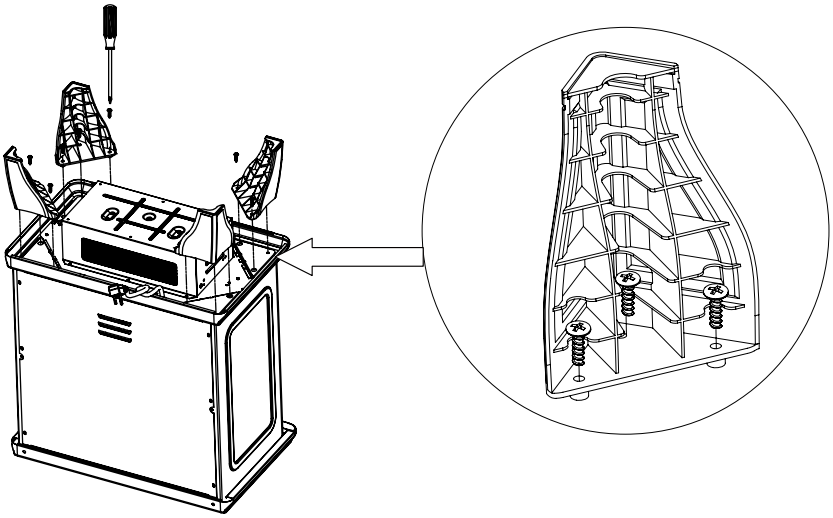

Fig.3

MOUNTING DOOR PULL TO THE STOVE BODY

Insert the handle into the front hole of the door, tighten the bolt with washer through the inside hole. Make sure to use washer.(Fig. 4)

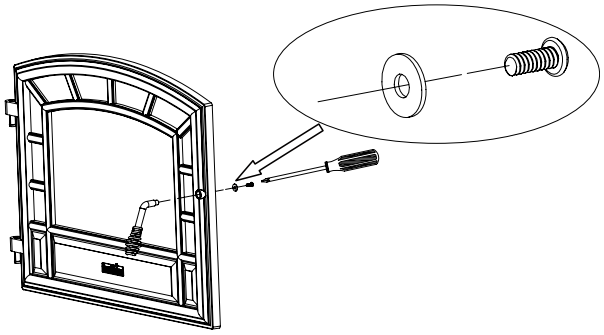

Fig. 4

STOVE LOCATION

When choosing a location for your new stove, follow the instructions listed in the <IMPORT INFORMATIONS> section in page 2.

Cold climate installation recommendation: When installing this unit against a non-insulated exterior wall or chase, it is mandatory that the outer walls be insulated to conform to applicable insulation codes.

ELECTRICAL CONNECTION

A 15-Amp, 120-V, 60 Hz circuit with a properly grounded outlet is required. Preferably, the fireplace will be on a dedicated circuit as other appliances on the same circuit may cause the circuit breaker to trip or the fuse to blow when the heater is in operation. The unit comes standard with 6-ft. (1.83 m) three-wire cord, exiting from the rear of the fireplace. Avoid using an extension cord. If an extension cord must be used, it must be a minimum 14 AWG, three wire with grounding type plug connector and rated not less than 1875 Watts. The cord shall not be more than 20 feet in length.

TO ACCESS CONTROL PANEL - Open the door to access the control panel.

- POWER
The Power switch supplies power to all of the functions of the fireplace and will illuminate the flame effect. This switch must be in the ON position for any of the functions to work.
NOTE: Holding the POWER button on the control panel for 10 seconds will disable the heater function. Re-activate the heater function by holding this button for 10 seconds again. The controls will beep several times when this function is activated.

- HEAT
Your fireplace consists of a fan-forced wire element type heater. The HEATER switch turns the heater ON and OFF. This switch must be in ON position for the heater function to work.

- TEMPERATURE
The Temperature control knob regulates the temperature level of the heater. The further the knob is rotated clockwise, the higher the set point temperature. Turning the knob counter-clockwise will lower the set point temperature. Use this function to help regulate the ambient temperature level.

(+ -) - BRIGHTNESS
Use + - to increase or decrease the flame brightness levels.

WARNING: Turn the power off when servicing this appliance. First turn the main power switch to the “OFF” position. Then remove the electrical plug from the wall outlet.

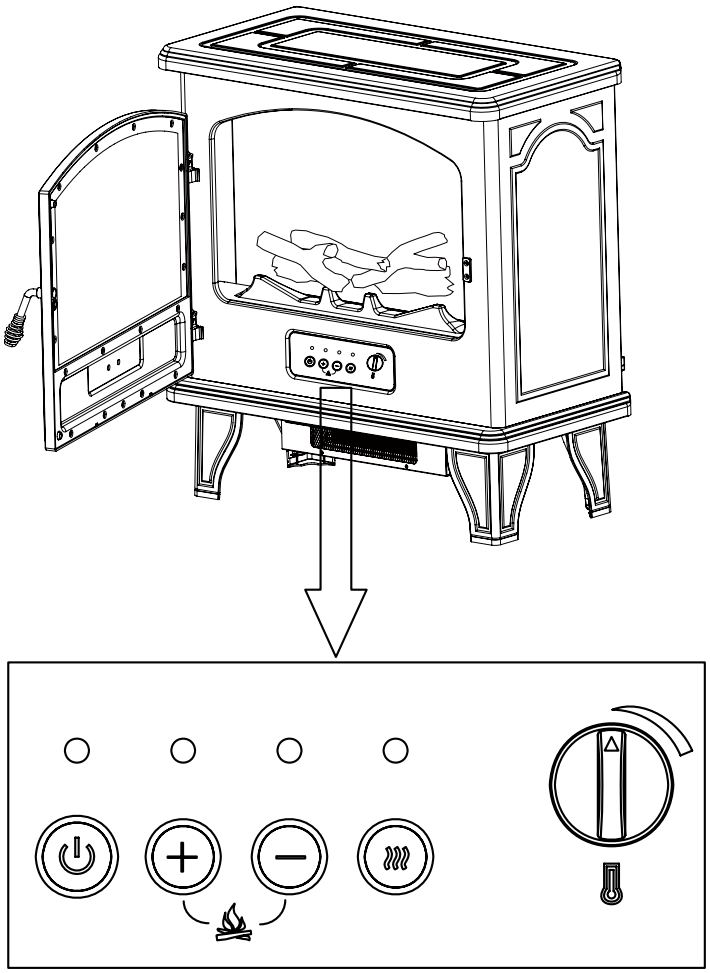

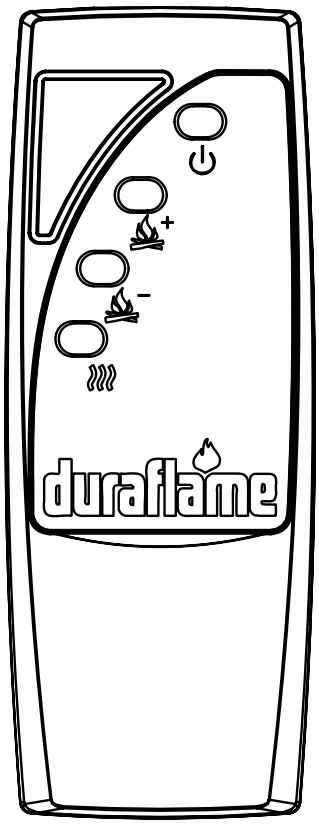

NOTE: Please operate remote transmitter at a slow measured pace. Press the remote control buttons with an even motion and gentle pressure. Repeatedly pressing buttons in rapid succession may cause the transmitter to malfunction.

Fig. 5

NOTE: This equipment has been tested and found to comply with the limits for Class B digital device, pursuant to part 15 of the FCC Rules. These limits are designed to provide reasonable protection against harmful interference in a residential installation. This equipment generates, uses, and can radiate radio frequency energy and, if not installed and used in accordance with the instructions, may cause harmful interference to radio or television reception, which can be determined by turning the equipment off and on, the user is encouraged to try to correct the interference by one or more of the following measures:

• Reorient or relocate the receiving antenna.
• Increase the separation between the equipment and the receiver.
• Connect the equipment into an outlet on a circuit different from that to which the receiver is connected.
• Consult the dealer or an experienced radio/TV technician for help.

This device complies with Part 15 of the FCC Rules. Operation is subject to the following two conditions:
(1) This device may not cause harmful interference, and
(2) this device must accept any interference received, including interference that may cause undesired operation.

Modifications not approved by the party responsible for compliance could void user's authority to operate the equipment.

This Class B digital apparatus complies with Canadian ICES-003.

REPLACING THE REMOTE CONTROL BATTERIES

When the remote control stops operating or its range seems reduced, it is time to replace the batteries with new ones. Remove dead batteries, or if the product will be left unused for a long period of time.

1. The battery compartment is located on the back end of the remote.
2. Press the small tab inwards as you slide the battery door open and remove the old batteries.
3. Insert 2pcs AAA batteries, checking that the + and - sides of the battery match inside the battery compartment.
4. Re-insert battery door.

DISPOSAL OF USED BATTERIES

A battery may contain hazardous substances which could be endangering to enviroment and human health.

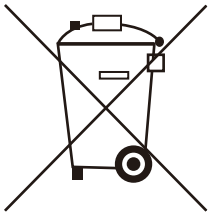

This symbol marked on the battery and/ or packaging indicates that used battery shall not be treated as municipal waste. Instead it shall be left at the appropriate collection point for recycling.

By ensuring the used batteries are disposed of correctly, you will help prevent potential negative consequences for the environment and human health. The recycling of materials will help to conserve natural resources.

For more information about collection and recycling of used batteries, please contact your local municipality, your waste disposal service or the point of sale where you purchased this point.

CLEARANCE TO COMBUSTIBLES

Keep electrical cords, drapery, furniture and other combustibles at least 3 ft (0.9 m) from the front of the heater and away from the sides.

CLEANING TRIM

Clean the metal trim using a soft cloth, slightly dampened with a citrus oil-based product and buff with a soft, clean cloth. DO NOT use brass polish or household cleaners as these products will damage the metal trim. Purchase citrus oil-based products at a hardware store.

REPLACING THE LIGHT BULBS

This electric stove uses two clear 120-V, 40-watt, E12 socket base light bulbs (candelabra base, B bulb). Access the 40-watt bulbs through the rear access panel (see illustration below). For convenience, replace all bulbs at the same time if one goes out.

1. Turn the main power switch off, and then unplug the power cord from the wall outlet.
2. If fireplace has been operating, let the unit cool at least 2 hours.
3. Loosen the screws holding the stove back panel to the main body of stove (see Fig 6).
4. Pinch the spring clip to loosen the spindle, and pull the rubber gromet out of the spinner motor shaft. (see Fig.7).
5. Pull the spinner out of the bracket.(see Fig 7).
6. Remove light bulbs and replace with two clear 120-V, 40 Watt E12 Socket base light bulbs (Fig. 8).
7. Place rear access panel back into position and tighten screws (do not over-tighten).

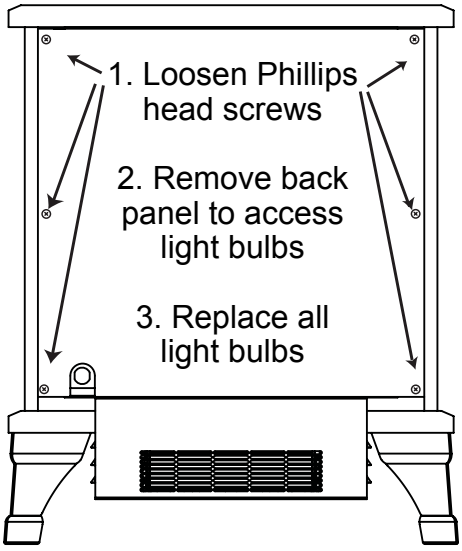

Fig. 6

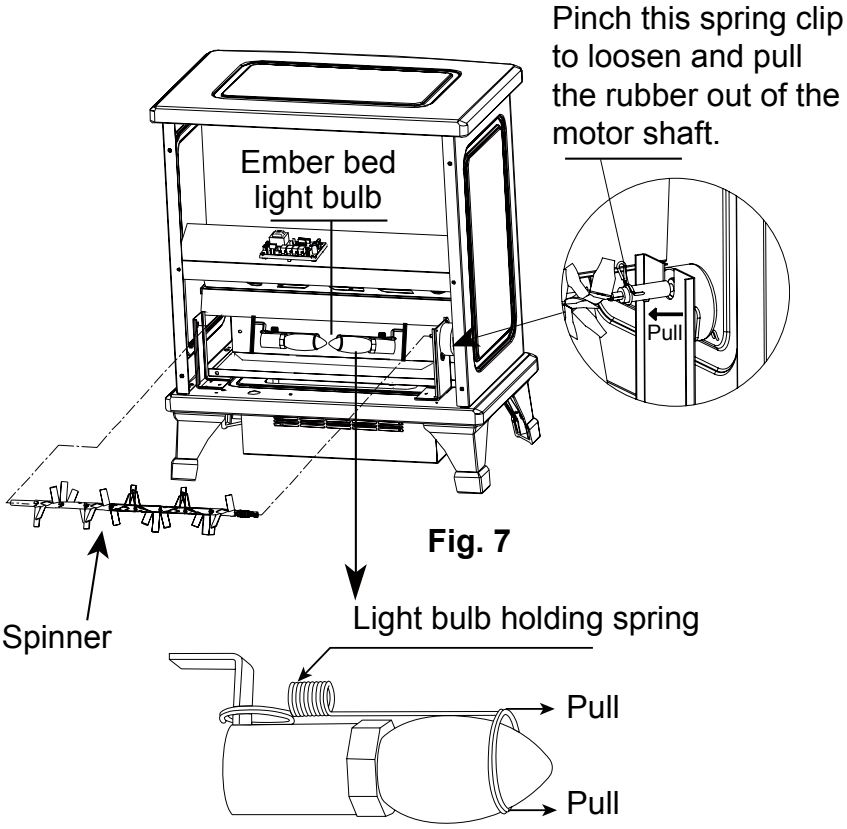

Fig. 7

Fig. 8

WARNING: Do not exceed 40 watts per bulb. Use of higher rated bulbs may result in a fire, causing property damage or personal injury.

MAINTENANCE OF MOTORS

- The motors used on the fan and the flame generator assembly are pre-lubricated for extended bearing life and require no further lubrication. However, we recommend periodic cleaning/vacuuming of the fan/heater
- Make sure the unit is turned OFF and unplugged whenever you are cleaning the heater or fireplace.

WARNING: Make sure the power is turned off before proceeding. Any electrical repairs or rewiring of this unit should be carried out by a licensed electrician in accordance with national and local codes.

If repairing or replacing any electrical component or wiring, the original wire routing, color coding and securing locations must be followed.

WARNING: Electrical outlet wiring must comply with local building codes and other applicable regulations to reduce the risk of fire, electrical shock and injury to persons.

WARNING: Do not use this fireplace if any part of it has been under water. Immediately call a qualified service technician to inspect the fireplace and replace any part of the electrical system.

WARNING: Disconnect power before attempting any maintenance or cleaning to reduce the risk of fire, electrical shock or personal injury.

TROUBLESHOOTING

PROBLEM	POSSIBLE CAUSE	CORRECTIVE ACTION
1. No power, switches do not light up.	1. Power cord was not plugged into the outlet.	1. Check that unit is plugged into a standard 120-v outlet.
2. Switches light up, but no flame effect.	2. Broken or loose bulb.	2. Remove the back panel and check for any broken or loose light bulbs.
3. Logs glow, flame effect does not work.	3a. Spinner fell from bracket 3b. Spinner motor doesn't work.	3a. Remove the back panel. Check to see if "spinner" is correcrly mounted to the rear of unit. 3b. Check to see if spinning motor is functioning. If not, call customer service.
4. Flame effect operates, but heater does not blow warm air.	4a. Heater switch is in "OFF" position. 4b. Thermostat is in low position.	4a. Check that heater switch is in "ON" position. Switch should light up. 4b. Make certain that thermostat is turned toward the highest position.
5. Heater doesn't work, but Power and Heater switches are in the "ON" position and thermostat is set on the highest level.	5a. The thermal protector has tripped. 5b. The HEATER function is locked.	5a.Turn all switches to the "OFF" position and unplug the unit from the wall outlet for 5 minutes. After 5 minutes, plug the unit back into wall outlet and operate as normal. 5b.Hold the POWER button for 10 seconds to activate the heater function.

1-YEAR LIMITED WARRANTY

The manufacturer warrants that your new Electric Stove is free from manufacturing and material defects for a period of one year from date of purchase, subject to the following conditions and limitations.

1. Install and operate this Electric Stove in accordance with the installation and operating instructions furnished with the product at all times. Any unauthorized repair, alteration, willful abuse, accident, or misuse of the product shall nullify this warranty.
2. This warranty is non-transferable, and is made to the original owner, provided that the purchase was made through an authorized supplier of the product.
3. The warranty is limited to the repair or replacement of part(s) found to be defective in material or workmanship, provided that such part(s) have been subjected to normal conditions of use and service, after said defect is confirmed by the manufacturer's inspection.
4. This warranty does not cover the light bulb(s) included with the Electric Stove.
5. The manufacturer may, at its discretion, fully discharge all obligations with respect to this warranty by refunding the wholesale price of the defective part(s).
6. Any installation, labor, construction, transportation, or other related costs/expenses arising from defective part(s), repair, replacement, or otherwise of same, will not be covered by this warranty, nor shall the manufacturer assume responsibility for same.
7. The owner/user assumes all other risks, if any, including the risk of any direct, indirect or consequential loss or damage arising out of the use, or inability to use the product, except as provided by law.
8. All other warranties – expressed or implied –with respect to the product, its components and accessories, or any obligations/liabilities on the part of the manufacturer are hereby expressly excluded.
9. The manufacturer neither assumes, nor authorizes any third party to assume on its behalf, any other liabilities with respect to the sale of the product.
10. The warranties as outlined within this document do not apply to non accessories used in conjunction with the installation of this product.

This warranty is void if:

a. The fireplace is subjected to prolonged periods of dampness or condensation.
b. Any unauthorized alteration, willful abuse, accident, or misuse of the product.
c. You do not have the original receipt of purchase.

IF WARRANTY SERVICE IS NEEDED

Contact the manufacturer by calling customer service department at 1-800-318-9373, 9 a.m.-5 p.m., EST, Monday-Friday. Make sure you have your warranty, your sales receipt, location of purchase and the model/serial number of your product.

REPLACEMENT PARTS LIST

For replacement parts, call our customer service department at 1-800-318-9373,
9 a.m.-5 p.m., EST, Monday-Friday.

Part	Description	Part No. DFS-750-1 DFS-750-6	Qty
A	Emberbed	Y10-S54-P02	1
B	Flame Generator/Spinner	Y10-S54-P11	1
C	Flame Generator Drive Motor	Y08-P10Q-S	1
D	Main PCBA	Y10-S54-P15	1
E	E-12 Light Bulb Sockets	Y10-S54-P08	1
F	Heater/Blower Assembly	Y10-S54-P01	1
G	Stove Legs	750-SL	1
H	Screws for stove legs	SW	4
I	Control Panel PCBA	Y10-S54-P32	1
J	Remote Control	P73	1
K	Door handle	750-DH1/750-DH-6	1
L	Door hardware	750-DHW	1

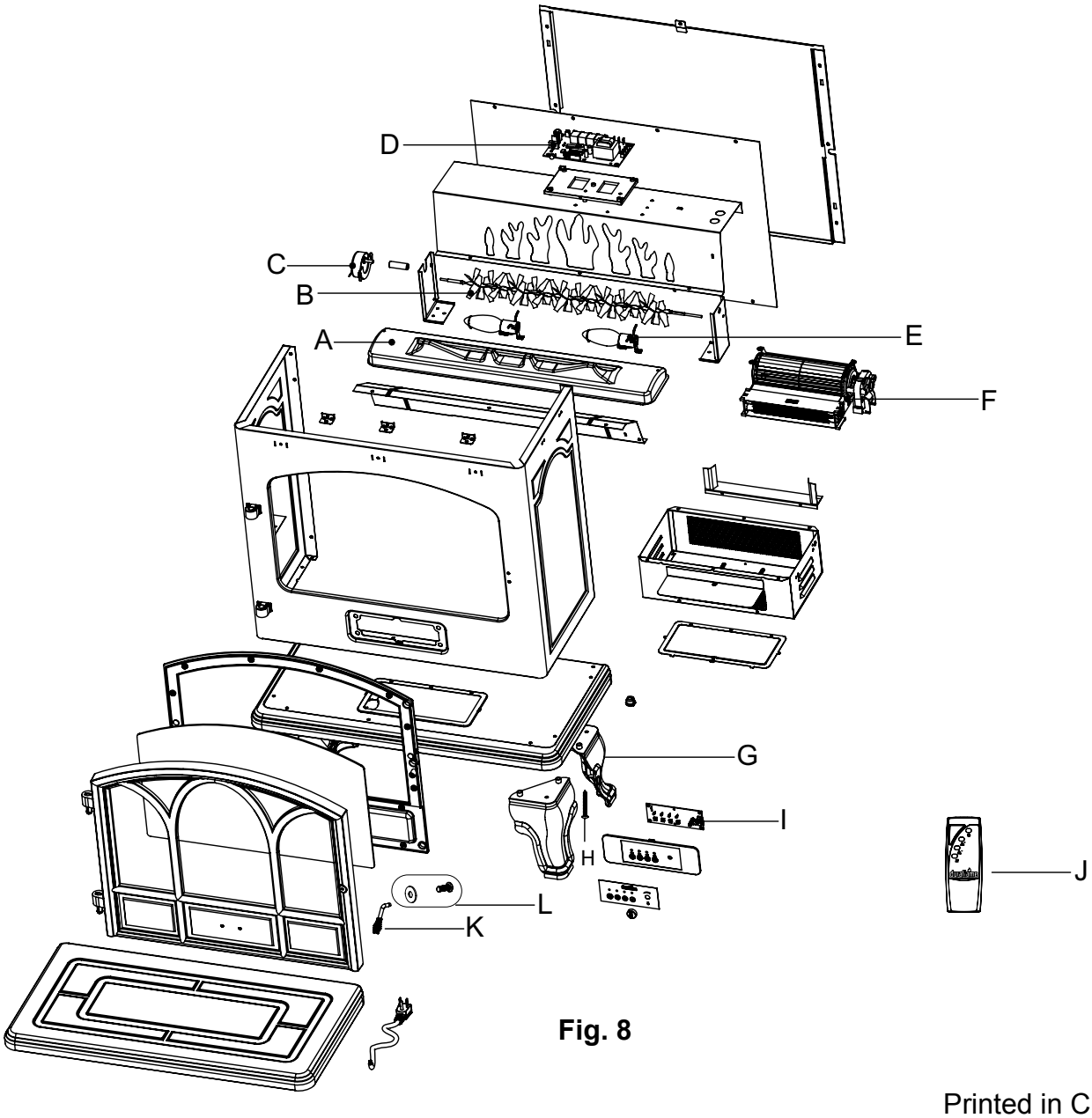

Fig. 8

Printed in China