CGGUN

18V Cordless Grease Gun

Assembly & Operating Instructions



READ ALL INSTRUCTIONS AND WARNINGS BEFORE USING THIS PRODUCT.

This manual provides important information on proper operation & maintenance. Every effort has been made to ensure the accuracy of this manual. These instructions are not meant to cover every possible condition and situation that may occur. We reserve the right to change this product at any time without prior notice.

IF THERE IS ANY QUESTION ABOUT A CONDITION BEING SAFE OR UNSAFE, DO NOT OPERATE THIS PRODUCT!

HAVE QUESTIONS OR PROBLEMS? DO NOT RETURN THIS PRODUCT TO THE RETAILER - CONTACT CUSTOMER SERVICE.

If you experience a problem or need parts for this product, visit our website http://www.buffalotools.com or call our customer help line at **1-888-287-6981, Monday-Friday, 8 AM - 4 PM Central Time**. A copy of the sales receipt is required.

FOR CONSUMER USE ONLY – NOT FOR PROFESSIONAL USE.

KEEP THIS MANUAL, SALES RECEIPT & APPLICABLE WARRANTY FOR FUTURE REFERENCE.

GENERAL SAFETY RULES FOR ALL ELECTRIC POWER TOOLS

⚠ WARNING

READ AND UNDERSTAND ALL INSTRUCTIONS. Failure to follow all instructions listed below may result in electric shock, fire and/or serious personal injury.

RECOGNIZE SAFETY SYMBOLS, WORDS AND LABELS

What You Need to Know About Safety Instructions

Warning and Important Safety Instructions appearing in this manual are not meant to cover all possible conditions and situations that may occur. Common sense, caution and care must be exercised when operating or cleaning tools and equipment.

Always contact your dealer, distributor, service agent or manufacturer about problems or conditions you do not understand.



This is the safety alert symbol. It is used to alert you to potential personal injury hazards. Obey all safety messages that follow this symbol to avoid possible injury or death.

⚠ DANGER — DANGER indicates an imminently hazardous situation which, if not avoided, will result in death or serious injury.

⚠ WARNING — WARNING indicates a potentially hazardous situation which, if not avoided, could result in death or serious injury.

⚠ CAUTION — CAUTION indicates a potentially hazardous situation which, if not avoided, may result in minor or moderate injury.

CAUTION — CAUTION used without the safety alert symbol indicates a potentially hazardous situation which, if not avoided, may result in property damage.

NOTE — NOTE provides additional information that is useful for proper use and maintenance for this tool. If a NOTE is indicated make sure it is fully understood.

IMPORTANT SAFETY INSTRUCTIONS

WORK AREA

⚠ WARNING

Keep your work area clean and well lit. Cluttered work benches and dark work areas may cause accidents or injury.

Do not operate power tools in explosive areas, such as in the presence of flammable liquids, gases or dust. Power tools create sparks which may ignite the dust or fumes.

Keep bystanders, children and visitors away while operating a power tool. Distractions can cause you to lose control.

TOOL USE & CARE

⚠ CAUTION

Use clamps or other practical ways to secure and support the workpiece to a stable platform. Holding the work by hand or against your body is unstable and may lead to loss of control.

Do not force tool. Use the correct tool for your application. The correct tool will do the job better and safer at the rate for which it is designed.

Do not use the tool if the power switch does not turn it "ON" or "OFF". Any tool that cannot be controlled with the switch is dangerous and must be repaired.

Store idle tools out of reach of children and other untrained persons. Tools are dangerous in the hands of untrained users.

⚠ DANGER

People with pacemakers or other electronic devices should consult with a physician before operating this product. Interruption or failure of the pacemaker could occur when electrical equipment is operated within close proximity of electrical devices.

⚠ WARNING

Inhaling dust created as a result of construction projects could be hazardous to your health. Construction dust may contain chemicals, which are known to cause cancer, birth defects and other reproductive harm in the State of California.

These chemicals could be, but are not limited to: lead from lead based paints, crystalline silica from bricks or cement, arsenic, and chromium from chemically treated-lumber.

To reduce your risk of exposure to harmful materials: always wear a dust mask that is designed to filter out hazardous microscopic contaminants, always work in a well ventilated area, and wear other approved safety equipment.

⚠ WARNING

WARNING: CALIFORNIA PROP 65: According to the State of California, this product contains or emits chemicals known to cause cancer, birth defects and other reproductive harm. **Wash hands after handling the power cord.** Touching the power cord could expose you to lead, which is known in the State of California to cause cancer, birth defects and other reproductive harm.

⚠ WARNING

All work areas should be clean and well lit. Accidents are more likely to occur in poorly lit and cluttered areas.

⚠ WARNING

Do not operate power tools in the presence of flammable liquids, gas, or dust. Sparks created from the power tool could ignite flammable materials.

⚠ WARNING

Keep children, and other distractions at a distance while operating power tools.

⚠ WARNING

Use common sense while operating this power tool.

Do not use this tool if you are:

- Feeling tired or are under the influence of alcohol or drugs.
- Wearing loose clothing or jewelry. Keep long hair pulled back and away from moving parts.
- Overreaching or have improper footing. Handling the tool in this way could cause serious injury.

When using this power tool always:

- Wear the proper safety equipment, such as safety goggles, dust masks, non-skid shoes, etc.

⚠ CAUTION

Follow these steps to maintain safe working conditions and good working condition of power tools. Improper care can result in electric shock or serious injury.

- Secure and support the work piece using clamps. **Do not use your hands to hold the piece in place.**
- **Use the correct tool for the job.** Using the correct tool is safer and faster.
- **Make sure the power switch is in good working order.** If the power switch no longer turns the tool "ON" or "OFF", discontinue use, and have the tool replaced or repaired.
- **Keep out of reach of children**, or any untrained person. Store tools in a safe and dry place.
- **Keep tools clean, and cutting tools sharp.** Maintaining tools with proper care will increase the life of the power tool, and reduce the risk of injury.
- **Check to be sure all moving parts are free from binding and are properly aligned.**
- Use only accessories that are recommended by the manufacturer for your tool model.

NOTE

Only qualified repair personnel must perform tool service. Service or maintenance performed by unqualified personnel could result in a risk of injury.

⚠ WARNING

Safety glasses and ear protection must be worn during operation.

SERVICE

Tool service must be performed only by qualified repair personnel. Service or maintenance by unqualified personnel could result in a risk of injury.

When servicing a tool, use only identical replacement parts. Follow instructions in the Maintenance section of this manual. Use of unauthorized parts or failure to follow Maintenance Instructions may create a risk of shock or injury.

IMPORTANT SAFETY INSTRUCTIONS

⚠ WARNING

Before using you need to become familiar with the operation of the tool. If you are unsure about the operation of the tool, or have any questions about the proper use of the tool, call Customer Service at 1-888-287-6981.

Follow these instructions for safe handling of the tool:

- Always secure and support the work piece using clamps. **Do not use your hands to hold the piece in place.**
- **Do not use solvents containing carbon tetrachloride, ammonia or acetone to clean the tool.** Never use gasoline, paint thinner, or other caustic chemicals that can damage the plastic parts of the tool.
- **Always use the appropriate safety gear when operating this tool.** Including but not limited, to goggles, dust mask or respirator. Always work in a well-ventilated area to reduce your exposure to harmful chemicals and dust particles.

FEATURES

- Single Speed
- 7000 PSI (482 bar)
- Flow Rate 2.82 oz / min
- Barrel Capacity: 16 oz Bulk, 14 oz Cartridge
- Rechargeable 1500 MAH NI-CD Battery
- Includes One Battery Pack
- 31" Flexible Hose

COMPONENTS

Observe the locations and functions of the various components and controls of this tool.

1) Vent valve (not visible)
2) Vent valve
3) Grease tube
4) Hose
5) Coupler
6) 6A) Follower rod
   6B) Handle
7) Battery pack
8) Handle
9) Trigger

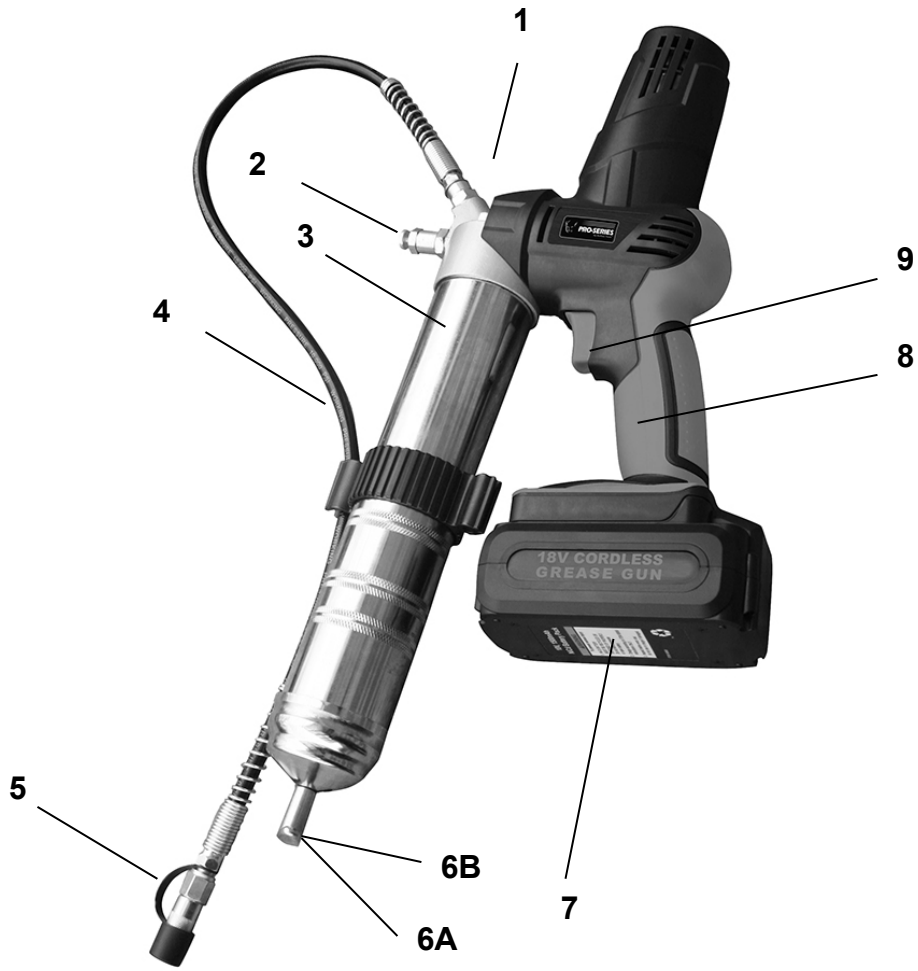

BATTERY CHARGER

⚠ WARNING

Unplug the battery power source before assembly, adjustments, or adding/removing accessories.

Use only the undamaged NiCd type Battery Pack. Do not charge a cracked, open, or leaking Battery Pack.

The Battery Pack's terminals will fit this Charger only. Do not use the Battery Pack if it does not fit the Charger. Do not force a Battery Pack into the Charger.

Plug the Charger Power Cord into a grounded, 120 VAC, 60 Hz receptacle. Do not use an extension cord.

A Green LED will light when the power is connected. It will remain on during the charging process when the cord is connected.

Position the Battery Pack into the Charger. The Red LED will flash to show the Battery is charging.

The Battery Pack and Charger may become warm to the touch during charging.

Allow the Battery Pack to Charge for 1 hour. The Red LED will light continuously when the Battery Pack is charged.

Unplug the Charger and disconnect it from the Battery Pack when finished.

GREASE GUN OPERATION

NOTE

Unpack product from package and review contents. Keep all packaging until product has been reviewed.

Loading the Grease Gun with a Grease Cartridge

1. Turn the screw counterclockwise to open the Vent Valve.

2. Grip the Follower Rod Handle and pull it until the Follower Rod is extended. Pull the Follower Rod sideways to latch it into the slot on the end cap of the Grease Tube, locking it open.

3. Remove the Grease Tube from the Pump Housing.

4. Remove the plastic cap from a grease cartridge (not included), and insert the cartridge into the Grease Tube.

5. Remove the pull tab from the grease cartridge and screw the Grease Tube back into the Pump Housing.

Release the Follower Rod from the slot on the end cap of the Grease Tube to allow the Follower Rod to move forward into the Grease Tube.

7. Once the Grease Gun is loaded, prime Gun and expel any air pockets as follows:

a. Close the Vent Valve.

b. Squeeze the Trigger several times to operate the Grease Gun until any trapped air is expelled and grease flows smoothly from the Coupler.

c. Push the Follower Rod all the way into the Grease Tube. Gun is now primed and ready for use.

Loading the Grease Gun from a Bulk Container

1. Unscrew and remove the Grease Tube from the Pump Housing.

2. Insert the open end of Grease Tube into lubricant. Slowly pull the Follower Rod back while pushing the Grease Tube deeper into the lubricant to prevent air pockets from being pulled into the Grease Tube.

3. When the Follower Rod is fully extended, pull it sideways to latch the Rod into the slot on the end cap of the Grease Tube, locking it open.

4. Screw the Grease Tube into the Pump Housing.

5. Release the Follower Rod from the slot on the end cap of the Grease Tube to allow the Follower Rod to move forward into the Grease Tube.

6. Clean any excess grease off the outer body of the Grease Gun.

7. Once the Grease Gun is loaded, prime Gun and expel any air pockets as follows:

a. Close the Vent Valve.

b. Squeeze the Trigger several times to operate the Grease Gun until any trapped air is expelled and grease flows smoothly from the Coupler.

c. Push the Follower Rod all the way into the Grease Tube. Gun is now primed and ready for use.

General Operating Instructions

1. Make sure that the Trigger is in the off-position, then attach the Battery Pack.

2. Insert the fully charged Battery Pack into the base of the Tool, making sure that it clicks into place securely. Be sure the Battery Pack is securely seated into the Grease Gun Handle so it does not fall off during use.

3. Always clean the zerk (grease) fitting carefully and completely with a clean cloth prior to inserting the Grease Gun's Coupler onto the zerk (grease) fitting.

4. Insert the Coupler fully onto the clean grease zerk fitting of the object to be lubricated. Make sure that the Coupler is fully seated on the zerk fitting.

5. Squeeze the Trigger several times or until a small amount of grease begins to flow out of the greased bushing.

6. Remove the Coupler from the zerk (grease) fitting, and wipe excess grease from the exterior of the zerk (grease) fitting, Hose, and Coupler.

7. To prevent accidents, turn off the tool and remove its Battery Pack after use. Clean, then store the Grease Gun and accessories in a dry, indoor area out of children's reach.

Warning! TO REDUCE THE RISK OF SERIOUS INJURY FROM INJECTION:

It may be necessary to hold the Coupler in place on the zerk (grease) fitting while lubricating. Hold the end of the hose by the spring guard only. Keep hands away from exposed rubber part of hose.

Cleaning, Maintenance, and Lubrication

1. BEFORE EACH USE, inspect the general condition of the tool. Check for:

- leaking, swollen, or cracked Battery Pack
- damaged Hose
- loose hardware
- misalignment or binding of moving parts
- cracked or broken parts
- damaged electrical wiring
- any other condition that may affect its safe operation.

AFTER USE, wipe external surfaces of the tool with clean cloth to remove all dirt, grease, and debris. Do not use solvents to clean the Grease Gun. Do not immerse the Grease Gun in any liquids.

3. NiCd BATTERY MUST BE RECYCLED OR DISPOSED OF PROPERLY. Do not short, incinerate or open battery.

4. WARNING! If the supply cord of the Charger is damaged, it must be replaced.

5. Disconnect Battery Pack and place Battery Pack, Charger, and Grease Gun in a dry, indoor area out of reach of children.

TROUBLESHOOTING

Problem	Possible Causes	Likely Solutions
Tool will not start.	1. Battery Pack not properly connected.	1. Remove Battery Pack, make sure there are no obstructions, reinsert the Battery Pack according to its shape (it should only fit one way), and press firmly until the Battery Pack locks in place.
	2. Battery Pack not properly charged.	2. Make sure Charger is connected and operating properly. Give enough time for Battery Pack to recharge properly.
	3. Battery Pack burnt-out.	3. Dispose of old Battery Pack properly or recycle. Replace Battery Pack.
	4. Internal damage or wear. (Carbon brushes or Trigger, for example.)	4. Have technician service tool.
Tool operates slowly.	1. Battery Pack power low	1. Recharge Battery Pack.
	2. Battery Pack wearing out.	2. Dispose of old Battery Pack properly or recycle. Replace Battery Pack.
Performance decreases over time.	Carbon brushes worn or damaged.	Have qualified technician replace brushes.
Excessive noise or rattling.	Internal damage or wear. (Carbon brushes or bearings, for example.)	Have qualified technician service tool.
Overheating.	1. Forcing tool to work too fast.	1. Allow tool to work at its own rate.
	2. Blocked motor housing vents.	2. Wear ANSI-approved safety goggles and NIOSH-approved dust mask/respirator while blowing dust out of motor using compressed air.
Follow all safety precautions whenever diagnosing or servicing the tool. Disconnect Battery Pack and Charger power supply before service.		

MAINTENANCE

⚠WARNING

Disconnect the power supply before cleaning. Wear safety eyewear before cleaning. Use compressed dry air to blow off dust and debris. Use a soft bristle brush if compressed air is not available.

CAUTION

Applying excessive force to the tool can overload the motor, decrease the life and increase the wear on the tool.

CAUTION

Some chemicals damage the product. Do not use harsh chemicals such as gasoline, carbon tetracholiride, paint thinner, etc.

CAUTION

A qualified repair technician must perform any tool service or repair. Service or maintenance performed by unqualified personnel could result in injury. Use only identical replacement parts. Use of unauthorized parts or failure to follow maintenance instructions may create a risk of electric shock or injury.

⚠WARNING

Do not make contact with a grounded surface while using this power tool. Contact with surfaces like pipes, radiators or major appliances increases your risk of electric shock.

Use only mild soap and a slightly damp cloth to clean the tool.

PARTS LIST

Part	Description	Qty
1	Motor	1
2	Pan Head Screw	4
3	Output Gear	1
4	Motor End Cover	1
5	Pan Head Screw	2
6	Big Washer	1
7	Planetary Gear	9
8	Planet Carrier	2
9	Annular Gear	1
10	Output Shaft	1
11	Washer	1
12	Shaft Sleeve	1
13	Drive Block	1
14	Drive Block Sleeve	1
15	Piston Holder	1

Part	Description	Qty
16	Sliding Block	1
17	Cover Plate	1
18	Pump Housing	1
19	Grease Tube	1
20	Piston	1
21	Steel Ball	1
22	Spring	1
23	Washer	2
24	Vent Valve	1
25	Connector	1
26	Housing (Left and Right sides)	1
27	Hose	1
28	Battery pack	1
29	Battery Connection Block	1
30	On/Off Switch	1
31	Over-current protect	1

PARTS DIAGRAM

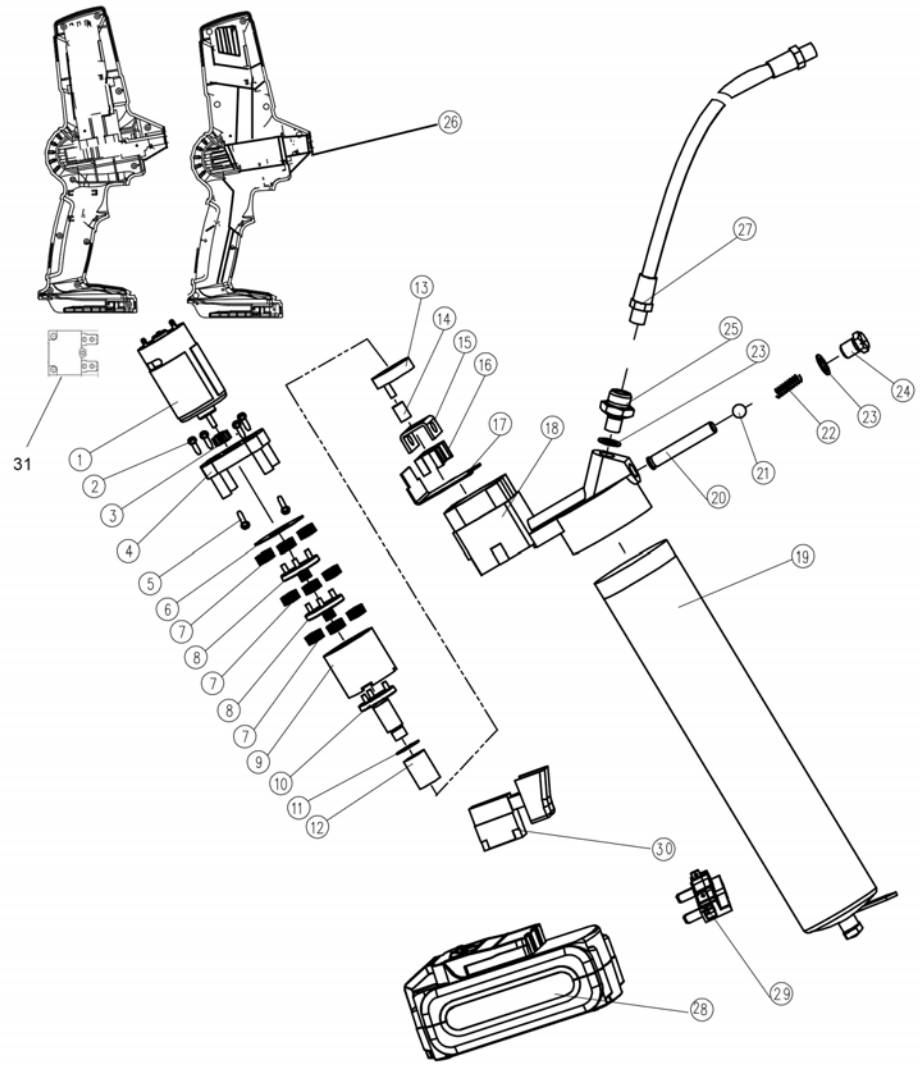

201704