HOME
DECORATORS
COLLECTION

STROUSSE 37" VANITY COMBO

Supplier Model# SRWVT3722D

Internet# 304110136	**SKU# 1003052246**

Assembled combo includes:
Vanity and Ice Diamond engineered stone top, with a pre-attached rectangular undermount sink and optional 4" backsplash

White finish

Dark Pewter knobs

4 full-extension slow-closing drawers

2 slow-closing doors

1 interior adjustable shelf

Adjustable leg-levelers for uneven floors

Top is pre-drilled for an 8" widespread faucet

Overall Dimensions: 37" x 22" x 34"H

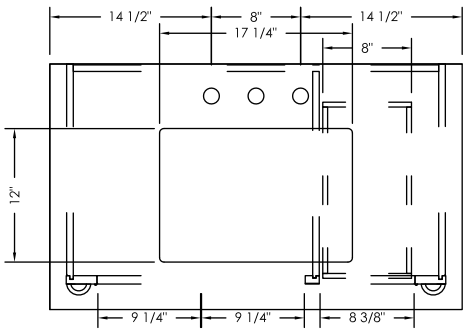

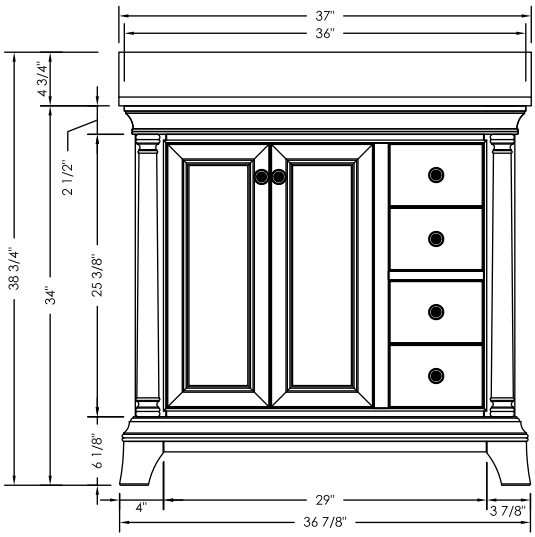

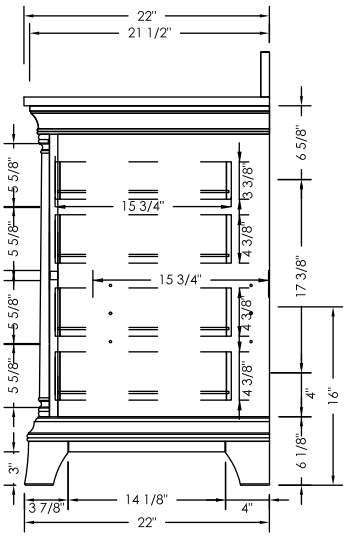

Copyright © 2019 Foremost Groups, Inc. All Rights Reserved. All dimensions are subject to change and variation without notice.