EN

OPERATOR'S MANUAL

ERGIESYSTEMS SNOW SHOVEL

Model ERG-SNSH18

Form No. ASP-ERG-SNSH18-880-MR5 (S)



THANK YOU FOR YOUR PURCHASE!

SCAN REGISTER ONLINE TODAY

- ACTIVATE YOUR **2 YEAR WARRANTY**
- RECEIVE **90 DAYS BONUS COVERAGE**
- VISIT **SHOPJOE.COM/REGISTER**

Place UPC sticker here

Failure to register your product purchase will not diminish your warranty rights. For more information visit shopjoe.com

+EXTENDED WARRANTY

UPGRADE YOUR COVERAGE AT SHOPJOE.COM/REGISTER

FOR UP TO 3, 4, OR 5 YEARS OF TOTAL TOOL COVERAGE

When we say we stand behind our product, we mean it! Now you can blow, mow, cut, saw or tend to any other yard task with confidence, knowing that if there is a problem with your tool within the warranty period, we will gladly solve it.

HAS YOUR SNOW JOE EXPERIENCE LEFT YOU SMILING?

TELL YOUR FRIENDS AND TAG US!

We love to hear your feedback! Share your experience by writing comments and reviews on **shopjoe.com**, or connect with us on social media!

@SNOWJOECO

#GOWITHJOE

OR HAS SOMETHING LEFT YOU LESS THAN SATISFIED?

WE' RE SORRY ABOUT THAT!

Our friendly customer service team is ready to help you with any issues you may have.

CALL US
1-866-225-9723

For fastest response
CHAT WITH US
SHOPJOE.COM/CHAT

Original instructions.
© 2026 Manufactured for All Season Power LLC.
Snow Joe®, Sun Joe®, Aqua Joe®, and Auto Joe® are registered trademarks used under license from Weather Brands LLC.
New Castle, DE 19720

SAVE THESE INSTRUCTIONS

SNOWJOE

OPERATOR'S MANUAL

ERGIESYSTEMS SNOW SHOVEL

Model ERG-SNSH18

Form No. ASP-ERG-SNSH18-880-MR5 (S)

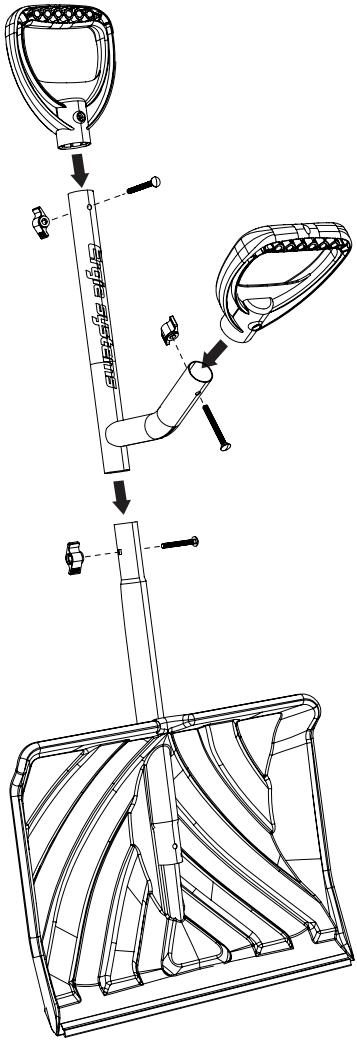

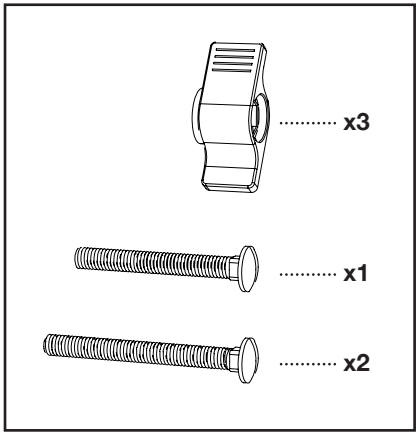

If you have any questions or comments, please call the All Seaon Power customer service department at: 1-866-225-9723

OUR CUSTOMER PROMISE + LIMITED WARRANTY

ABOVE ALL ELSE, All Season Power**,** LLC ("All Season Power") is dedicated to you, our customer. We strive to make your experience as pleasant as possible. Unfortunately, there are times when a Snow Joe®, Sun Joe®, Aqua Joe® or Auto Joe® product ("Product") does not work or breaks under normal operating conditions. We think it's important that you know what you can expect from us. That's why we have a Limited Warranty ("Warranty") for our Products.

OUR WARRANTY:
All Season Power warrants new, genuine, powered and non-powered Products to be free from defects in material or workmanship when used for ordinary household use for a period of two years from the date of purchase or delivery by the original, end-user purchaser when purchased from All Season Power or from one of All Season Power's authorized sellers with proof of purchase. Because All Season Power is unable to control the quality of its Products sold by unauthorized sellers, unless otherwise prohibited by law, this Warranty does not cover Products purchased from unauthorized sellers. If you have any questions about how to buy from an authorized seller, chat with us at **shopjoe.com/support** or call us at **1-866-225-9723**. If your Product does not work or there's an issue with a specific part that is covered by the terms of this Warranty, All Season Power will elect to either (1) send you a free replacement part, (2) replace the Product with a new or comparable product (which may include a refurbished, like-new product) at no charge, or (3) repair the Product. How cool is that!

PRODUCT REGISTRATION:
All Season Power strongly encourages you to register your Product. You can register online at shopjoe.com/register, by chatting with us at **shopjoe.com/support** or calling our Customer Service Department at **1-866-225-9723**. Failure to register your Product will not diminish your warranty rights. However, registering your Product will allow All Season Power to better serve you with any of your customer service needs.

WHO CAN SEEK LIMITED WARRANTY COVERAGE:
This Warranty is extended by All Season Power to the original purchaser and original owner of the Product.

WHAT IS NOT COVERED?
This Warranty does not apply if the Product has been used commercially or for non-household or rental applications. This Warranty also does not apply if the Product was purchased from an unauthorized seller. This Warranty also does not cover cosmetic changes that do not affect performance. Wearing parts like belts, augers, chains and tines are not covered under this Warranty, and can be purchased at shopjoe.com or by calling 1-866-225-9723.

CERTIFIED AUTHENTIC

We encourage you to use **CERTIFIED AUTHENTIC** Snow Joe®, Sun Joe®, Aqua Joe® + Auto Joe® replacement parts + accessories. Damage caused by the use of any other parts + accessories on your Product will not be covered under the warranty. Genuine parts + accessories can be found and purchased here by entering the model number of your product.

When you register your powered or non-powered Product with All Season Power at **shopjoe.com/register**, you will receive an additional 90 days of warranty coverage. In addition, you will have the option of purchasing extended warranty coverage beyond the standard 2-year manufacturer's warranty. Choose from one, two, or three years of extended coverage through Extend, Inc. Additional charges apply. When you Go With Joe®, you're not just buying an extended warranty; you're buying total peace of mind to know that you can rely on our top-notch tools, top-tier customer support, complete product coverage + no hassle return policy. Chat with us at **shopjoe.com/support** or call us at **1-866-225-9723** 7 days a week 10AM-6PM EST. We've got you covered!

There are no warranties which extend beyond those stated herein. **ANY IMPLIED WARRANTIES THAT MAY BE APPLICABLE TO PRODUCTS, INCLUDING IMPLIED WARRANTIES OF MERCHANTABILITY OR FITNESS FOR A PARTICULAR PURPOSE, ARE LIMITED IN DURATION TO THE DURATION OF THIS WARRANTY.** Some States do not allow limitations on how long an implied warranty lasts, so the above limitation may not apply to you.

UNDER NO CIRCUMSTANCES SHALL WE BE LIABLE FOR ANY SPECIAL, INCIDENTAL, OR CONSEQUENTIAL DAMAGES BASED UPON BREACH OF THIS LIMITED WARRANTY, BREACH OF CONTRACT OR STRICT LIABILITY. Some States do not allow the exclusion or limitation of incidental or consequential damages, so the above limitation or exclusion may not apply to you. This warranty gives you specific legal rights, and you may also have other rights which vary from State to State. This warranty supersedes those printed in product manuals.

R7_06022025



shopjoe.com