18-GAUGE 2-INCH BRAD NAILER

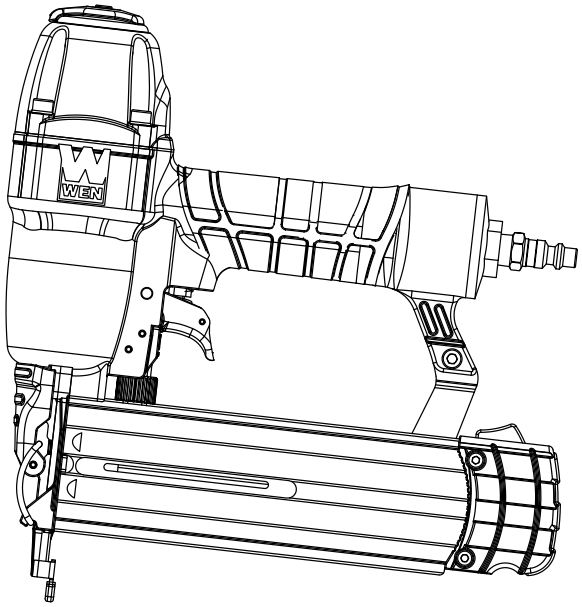

Model # 61721
bit.ly/wenvideo

IMPORTANT:

Your new tool has been engineered and manufactured to WEN's highest standards for dependability, ease of operation, and operator safety. When properly cared for, this product will supply you years of rugged, trouble-free performance. Pay close attention to the rules for safe operation, warnings, and cautions. If you use your tool properly and for intended purpose, you will enjoy years of safe, reliable service.

NEED HELP? CONTACT US!

Have product questions? Need technical support?
Please feel free to contact us at:

800-232-1195 (M-F 8AM-5PM CST)

techsupport@wenproducts.com

WENPRODUCTS.COM

TABLE OF CONTENTS

Technical Data 2
General Safety Rules 3
Specific Safety Rules for Nailers 4
Know Your Nailer 7
Operation 7
Maintenance 9
Exploded View and Parts List 10
Troubleshooting 12
Warranty 13

TECHNICAL DATA

Model Number:	61721
Operating Pressure Range:	60 PSI - 115 PSI
Air Inlet:	1/4″ NPT
Nail Size Range:	3/8″, 5/8″, 3/4″, 1″, 1-1/4″, 1-3/8″, 1-1/2″, 1-3/4″, 2″
Nail Diameter:	18 Gauge (.0475 inches)
Air Consumption per Nail:	0.028 Cubic Feet @ 88 PSI
Magazine Capacity:	106
Weight:	2.80 lbs
Package Contents:	Brad Nailer Two Hex Wrenches Lubricating Oil 500 Pieces of 18-Gauge Nails (3/8″) 500 Pieces of 18-Gauge Nails (3/4″) 500 Pieces of 18-Gauge Nails (1″) 500 Pieces of 18-Gauge Nails (2″)

GENERAL SAFETY RULES

Hello! The purpose of the following safety symbols is to attract your attention to possible dangers. We don't want any of our beloved WEN customers accidentally injuring themselves. The safety symbols and explanations with them deserve your careful attention and understanding. The safety warnings do not by themselves eliminate any danger. These instructions and warnings are not substitutes for proper accident prevention measures (obviously).

Safety Alert Symbol: Indicates danger, warning, or caution. This may be used in conjunction with other symbols. Always follow the safety precautions to reduce the risk of fire, electric shock and personal injury.

IMPORTANT: Servicing requires extreme care and knowledge and should be performed only by a qualified service technician.

WARNING: Do not attempt to operate this tool until you have thoroughly read and understood all instructions, safety rules, etc...contained in this manual. Failure to comply can result in accidents involving fire, electric shock, or serious personal injury. Save this operator's manual and review frequently for continuing safe operation and instructing others who may use this tool.

Safe operation of this power tool requires that you read and understand this operator's manual and all labels affixed to the tool. Safety is a combination of common sense, staying alert, and knowing how your tool works.

SAFETY RULES

Safety is a combination of common sense, staying alert and knowing how your item works. **SAVE THESE SAFETY INSTRUCTIONS.**

WARNING: To avoid mistakes and serious injury, do not use your tool until the following steps have been read and understood

1. READ and become familiar with this entire instruction manual, no matter how boring it may be. LEARN the tool's applications, limitations, and possible hazards.

2. REGULATE AIR PRESSURE. Use air pressure that is compatible with the ratings on the nameplate of the tool. Do not connect the tool to a compressor rated at over 175 PSI.

3. USE ONLY clean dry and regulated air. Condensation from an air compressor can rust and damage the internal workings of the tool.

4. ALWAYS keep your work area clean, uncluttered, and well lit. DO NOT work on floor surfaces that are slippery with sawdust or wax.

5. KEEP BYSTANDERS AT A SAFE DISTANCE from the work area, especially when the tool is operating. NEVER allow children or pets near the tool.

6. DO NOT FORCE THE TOOL to do a job for which it was not designed.

7. DRESS FOR SAFETY. Do not wear loose clothing, gloves, neckties, or jewelry (rings, watches, etc.) when operating the tool. Inappropriate clothing and items can get caught in moving parts and draw you in. ALWAYS wear non-slip footwear and tie back long hair.

8. WEAR A FACE MASK OR DUST MASK to fight the debris produced by operation and ear protection to fight hearing loss. Everyone in the work area MUST wear safety glasses with side shields. These safety glasses must conform to ANSI Z87.1 requirements (approved glasses have "Z87" printed or stamped on them). It is the employer's responsibility to enforce the use of eye protection equipment by both the tool operator and others in the work area.

WARNING: Dust generated from certain materials can be hazardous to your health. Always operate the tool in a well-ventilated area and provide for proper dust removal. Use dust collection systems whenever possible.

9. ALWAYS USE an air hose that is rated at a maximum working pressure of at least 150 psi (10.3 bar) or 150% of the maximum system pressure (whichever is higher).

10. DO NOT USE BOTTLED GASES to power this tool. Bottled compressed gases including but not limited to oxygen, carbon dioxide, nitrogen, hydrogen, propane, acetylene or air are not for use with pneumatic tools. Never use combustible gases or any other reactive gas as a power source for this tool. Danger of explosion and/or serious personal injury may result.

11. USE COUPLINGS that relieve all pressure from the tool when it is disconnected from the power supply. Use hose connectors that shut off the air supply from the compressor when the tool is disconnected.

12. DISCONNECT tool from air supply when not in use. Remove fasteners from magazine before leaving the area or passing the tool to another operator. Do not climb ladders, stairs, scaffoldings, etc. without disconnecting the tool. Do not carry a connected tool to another work area. Do not make adjustments, remove magazine, perform maintenance or clear jammed fasteners while connected to the air supply. If the safety bracket is adjusted when the tool is connected to the air supply with loaded nails, accidental discharge may occur.

13. LOAD FASTENERS before connecting the tool to the air supply. Otherwise, fasteners are at risk of being fired during connection. The tool's driving mechanism may cycle when it is connected to the air supply. Do not load fasteners when the trigger or the safety is pressed down in order to prevent unintentional firings of a fastener.

14. DO NOT REMOVE, tamper with, or otherwise cause the tool, trigger or safety bracket to become inoperable. Do not tape or tie the trigger or safety bracket in the ON position. Do not remove springs from the safety bracket. Make daily inspections for free movement of the trigger and safety bracket. Uncontrolled discharge may result. Do not alter or modify the tool in any way.

15. DO NOT OVERREACH. Keep proper footing and balance at all times. Wear oil-resistant rubber-soled footwear. Keep the floor clear of oil, scrap, and other debris.

16. MAINTAIN TOOLS PROPERLY. ALWAYS keep tools clean and in good working order. Follow instructions for lubricating and changing accessories. Inspect tool before use. Do not operate if any portion of the tool, trigger, or safety bracket is damaged, inoperable, disconnected, or altered. Leaking air, damaged parts, or missing parts should be repaired or replaced before use.

17. ALWAYS ASSUME that the tool contains fasteners. Do not point the tool at coworkers or yourself at any time, even if you think it will be really funny.

18. MAKE THE WORKSHOP CHILDPROOF. Use padlocks and master switches and ALWAYS remove starter keys. Keep bystanders, children and visitors away while operating the power tool. Distractions can cause you to lose control. When tool is not in use, it should be locked away in a safe place.

19. DO NOT operate the tool if you are under the influence of drugs, alcohol, or medication that may affect your ability to properly use the tool.

20. REMOVE FINGER FROM TRIGGER when not driving fasteners. Never carry the tool with your finger on the trigger.

21. MAKE SURE HOSE is free of obstructions or snags. Entangled or snarled hoses can cause a loss of balance.

22. DO NOT DISCHARGE fasteners into open air, concrete, stone, extremely hard woods, knots or any material too hard for the fastener to penetrate. Do not use the body of the tool or top cap as a hammer. Discharged fasteners may follow unexpected paths and cause bodily injury.

23. DO NOT DRIVE FASTENERS near the edge of your work material. The workpiece may split, causing the fastener to ricochet, injuring you or a bystander. Be aware that the nail may follow the grain of the wood, causing it to protrude unexpectedly from the side of the work material. Drive the nail perpendicular to the grain to reduce risk of injury.

24. DO NOT DRIVE NAILS onto the heads of other fasteners. Do not use the tool at too steep of an angle.

Personal injury from strong recoil, jammed fasteners, or ricochetted nails may result.

25. BE AWARE of material thickness when using the nailer. A protruding nail may cause injury.

26. KNOW that when the tool is being utilized at pressures on the high end of its operating range, nails can be driven completely through thin or very soft work material. Make sure the pressure in the compressor is set so that nails are set into the material and not pushed completely through.

27. KEEP HANDS AND BODY PARTS CLEAR of immediate work area. Hold workpiece with clamps when necessary to keep body parts out of potential harm. Be sure the workpiece is properly secured before pressing the nailer against the material. The safety bracket may cause the work material to shift unexpectedly.

28. DO NOT USE THE TOOL in the presence of flammable dust, gases or fumes. The tool may produce a spark that could ignite gases causing a fire. Driving a nail into another nail may also cause a spark.

29. KEEP FACE AND BODY PARTS away from the back of the tool cap when working in restricted areas. Sudden recoil can result in impact to the body, especially when nailing into hard or dense material.

30. GRIP THE TOOL FIRMLY to maintain control while still allowing it to recoil away from the work surface as the fastener is driven. In bump action mode (contact actuation mode), allowing the safety bracket to recontact the work surface before the trigger is released will fire an unwanted fastener.

31. KEEP ALERT. Watch what you are doing. Use common sense. Do not operate any tool when you are tired or under the influence of drugs, alcohol or medication.

32. USE PROPER EXTENSION CORDS. When using an air compressor outdoors, use only rounded jackets extensions cords. These are intended for outside use. See manufacturer's manual for the AWG required for the compressor's amperage draw.

33. PAY ATTENTION TO AIR HOSE AND THEIR CONNECTIONS. Don't trip over the hoses. It isn't fun. Also, make sure the connections are nice and tight. Use appropriate hose tape to prevent leaking.

34. WHEN CONNECTING TO THE AIR SUPPLY, the tool is at risk of possibly firing fasteners. Be aware of this and do not aim the gun at anything you do not want to shoot a nail into.

35. DO NOT DEPRESS THE SAFETY BRACKET OR THE TRIGGER WHEN LOADING.

36. IF THE FASTENERS ARE JAMMED, disconnect the tool from the air supply first before removing the jammed fasteners.

WARNING: The warnings, cautions, and instructions explained in this manual cannot cover all possible conditions and situations that may occur. It must be understood by the operator that COMMON SENSE AND CAUTION ARE FACTORS WHICH CANNOT BE BUILT INTO THIS PRODUCT, BUT MUST BE SUPPLIED BY THE OPERATOR.

KNOW YOUR NAILER

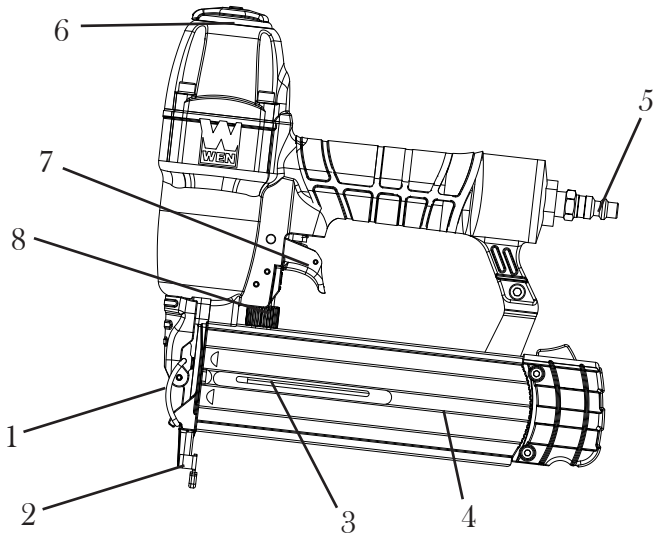

1 - Jam-Clearing Latch
2 - Safety Bracket
3 - Low Nail Indicator Window
4 - Magazine
5 - Air Inlet
6 - Exhaust
7 - Trigger
8 - Depth Adjustment Wheel

OPERATION

WARNING - if any parts are missing, do not operate this tool until the missing parts are replaced. Failure to do so could result in a possibly serious personal injury.

LUBRICATION (Fig. 1)
This tool requires lubrication before each use (especially the first use). If an inline oiler is used, manual lubrication through the air inlet is not required.

NOTE: The work surface can become damaged by excessive lubrication. Proper lubrication is the owner's responsibility. Failure to lubricate the tool properly will dramatically shorten the life of the tool and void the warranty.

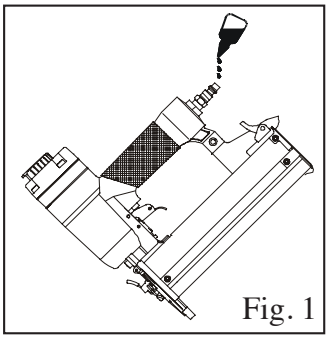
Fig. 1

1. Disconnect the air supply from the tool to add lubricant.

2. Turn the tool so the air inlet is facing up. Place 4 to 5 drops of oil into the air inlet.

3. After adding oil, briefly run the tool. Wipe off any excess oil from the exhaust.

RECOMMENDED HOOKUP (Fig. 2)
Your air tool is fully assembly when you receive it. Before using it, attach the air line and desired air system accessories. See the diagram on the right for the recommended accessories and connection order. Be sure the air hose is depressurized when installing or removing adapters to the air line.

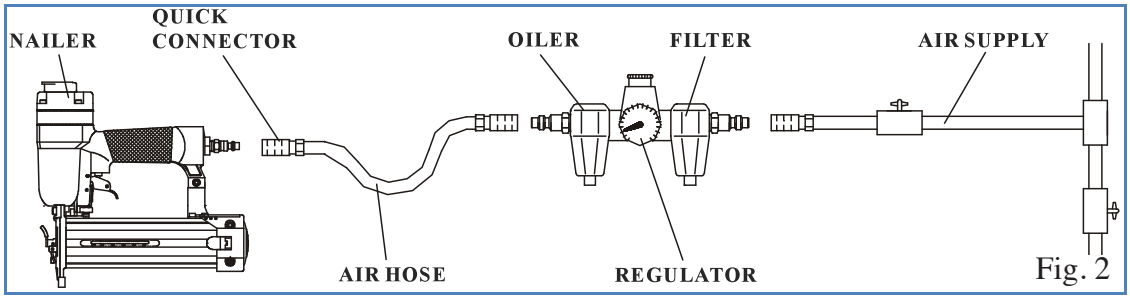

Fig. 2

LOADING THE FASTENERS (Fig. 3)

NOTE: Always load the fasteners prior to connecting the tool to a power supply. Otherwise, unwanted misfires may occur.

1. Depress the lock to release the movable magazine and pull the magazine out fully.

2. Place a full clip of the specified type and size fasteners on the fixed magazine. 106 fasteners may be loaded in the magazine. Make sure the heads of the nails rest on the appropriate ridge inside the fixed magazine.

3. Push the movable magazine assembly forward until it is locked.

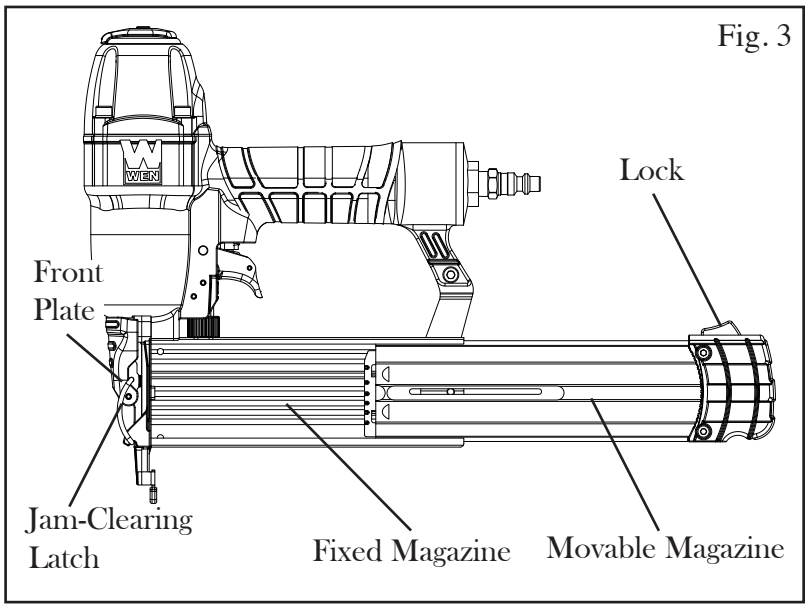

Fig. 3

CONNECTING THE TOOL TO AN AIR SUPPLY

NOTE: Make sure that the tip of the nailer is pointed away from you when connecting to an air supply. Do not operate when the air pressure is outside of the recommended range (60 to 115 PSI).

1. Determine if the tool needs oil and, if necessary, place 4 to 5 drops of oil in the air inlet (Fig. 1) as outlined above in the Lubrication section.

2. Turn the compressor on and set the Regulator (Fig. 2) to the proper pressure according to the size and type of fastener being used. The air pressure range should be within 60 PSI to 115 PSI.

3. Connect the tool to the Air Supply (Fig. 2).

ADJUSTING THE DEPTH ADJUSTMENT WHEEL

WARNING: Using a nail gun can be dangerous. To reduce the risk of injury, always wear proper eye and hearing protection when operating this tool. Stay alert and keep proper balance at all times. Always release the trigger when not operating the nail gun to reduce the risk of unintended nail discharge.

Use the Depth Adjustment Wheel (Know Your Nailer) found directly underneath the trigger to adjust the depth of the fired nails. Turn the wheel to the left for deeper nails, or turn to the right for shallower nails.

SHOOTING NAILS

Test the driving depth in a sample piece of wood before using. If the fasteners are being driven too far or not far enough, adjust the regulator to provide less air pressure or more air pressure (along with the aid of the depth adjustment wheel).

1. Check that the air supply is correctly connected to the tool at the correct pressure and the fasteners have been loaded into the magazine.

2. Hold the nailer and press the safety bracket flush against the work surface, making sure that the tool is straight. With the safety bracket depressed, press the trigger to drive the fastener.

OPERATION

DRIVING MODES

The brad nailer is installed with a contact trigger. Activate both the safety bracket and the trigger in any order to drive a fastener.

To fire a single nail: Push the safety bracket against the work surface and pull the trigger; or hold down the trigger and press down the safety bracket onto the work surface.

To fire multiple nails (bump fire): Hold down the trigger and repeately press the safety bracket against the work surface to drive the fasteners. The tool will drive one fastener every time the safety bracket is activated.

WARNING: Unintended nails can be discharged when the trigger is engaged and the safety bracket is knocked on surfaces by accident. Do not hold down the trigger unless you are prepared for operation.

CLEARING JAMMED NAILS

WARNING: disconnect air line from the tool and remove all fasteners before removing jammed nails to avoid personal injury. If a nail becomes jammed in the nosepiece, keep the tool pointed away from yourself and others.

1. Disconnect air supply from tool. Then, press magazine lock to release movable magazine.

2. Flip open the jam-clearing latch and pull up to open front plate. Remove jammed nail, using pliers or other tools if necessary.

3. If the piston assembly is in the down position, insert screwdriver or other rod into nosepiece and push the piston back in position.

4. Remove rod and close front plate. Push down latch cover to secure front plate to nosepiece. Make sure the trigger and safety bracket move freely without sticking or binding.

5. Load the magazine. Reattach nailer to air supply. Test fire a nail into scrap wood to confirm the nailer is working properly again.

NOTE: If nails continue to jam in the nosepiece, have your tool serviced by an authorized WEN service center.

MAINTENANCE

CLEAN AND INSPECT DAILY

CAUTION - Disconnect tool from air supply before cleaning/inspection. Correct all problems before operation.

Add pneumatic tool oil into the oiler regularly to ensure the moving components are finely lubricated. Check the filter of the compressor weekly and switch off the manual valve to drain water and contaminations out. Wipe the tool clean. Blow the tool clean using compressed air, then use non-flammable cleaning solutions to wipe exterior of the tool as necessary. Do not soak tool with cleaning solutions. Such solutions can damage internal parts. The exposed portion of the small piston rod and feed hook must be kept clean.

Inspect trigger and safety mechanism to assure system is complete and functional (no loose or missing parts, no binding or sticking parts). Keep all screws tight. Loose screws can cause personal injury or damage the tool .Check if there are worn and damaged parts. If there are, replace said damaged parts immediately. If tool is used without an in-line oiler, place 5 or 6 drops of air tool oil into the air inlet of the tool at the beginning of each workday.

EXPLODED VIEW AND PARTS LIST

No.	Part No.	Description
1	61720-001	Screw
2	61720-002	Bushing
3	61720-004	Washer
4	61721-004	Bushing Washer
5	61721-005	Screw
6	61721-006	Washer
7	61721-007	Cylinder Cap
8	61721-008	Gasket
9	61720-010	Seal
10	61721-010	Spring
11	61720-015	Valve
12	61720-012	O-Ring
13	61720-013	O-Ring
14	61720-014	O-Ring
15	61720-016	Stop Washer
16	61720-018	Collar
17	61720-017	O-Ring
18	61721-018	Cylinder
19	61720-021	O-Ring
20	61721-020	O-Ring
21	61720-019	O-Ring
22	61721-022	Piston Assembly
23	61721-023	Bumper
24	61721-024	Body
25	61720-025	Seal
26	61721-026	Safe Guide
27	61720-031	Spring Pin
28	61721-028	Spring
29	61721-029	Safety Bracket A
30	61721-030	Safety Bracket B
31	61721-031	Bushing
32	61721-032	Washer
33	61720-061	Screw
34	61721-034	Rubber Cover
35	61720-032	O-Ring
36	61720-033	Trigger Valve Head
37	61720-034	Spring
38	61720-035	O-Ring

No.	Part No.	Description
39	61721-039	Trigger Valve Stem
40	61720-038	Trigger Valve Guide
41	61720-037	O-Ring
42	61721-042	Spring
43	61720-044	Washer
44	61721-044	Trigger Assembly
45	61720-042	Trigger Pin
46	61721-046	Latch Assembly
47	61721-047	Latch Cover
48	61721-048	Pin
49	61721-049	Plate
50	61721-050	Pin
51	61721-051	Rail
52	61720-046	Screw
53	61721-053	Front Plate
54	61721-054	Drive Guide
55	61721-055	Fixed Magazine
56	61721-056	Feeder Shoe
57	61721-057	Feeder Set
58	61720-059	Spring
59	61721-059	Movable Magazine
60	61721-060	Stop Plate
61	61720-068	Screw
62	61721-062	Screw
63	61721-063	Joint Guide
64	61721-064	Bushing
65	61721-065	Spring
66	61721-066	Lock
67	61721-067	Nut
68	61721-068	Washer
69	61721-069	Screw
70	61721-070	Screw
71	61721-071	Support
72	61721-072	Nut
73	61721-073	Soft Grip Sleeve
74	61720-070	O-Ring
75	61721-075	End Cap
76	61720-072	Air Plug

EXPLODED VIEW AND PARTS LIST

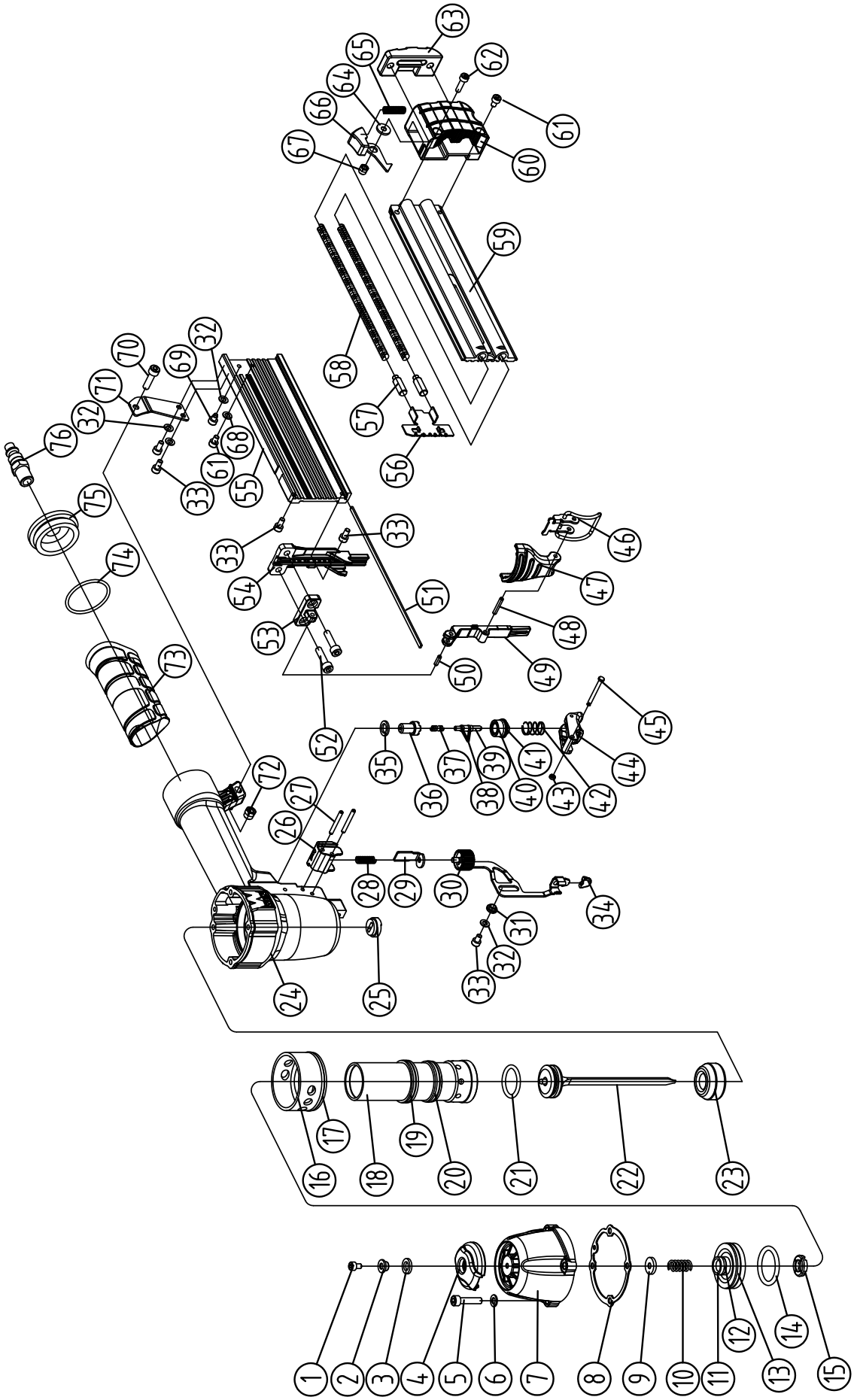

TROUBLESHOOTING

CAUTION: Stop using the tool immediately if any of the following problems occur or risk serious personal injury. Repairs and replacements should only be performed by authorized personnel at a certified WEN service center.

Problem	Common Causes	Solution
Air leaking at Trigger area	1. O-ring in trigger valve is damaged. 2. Trigger valve head is damaged. 3. Trigger valve stem, seal or O-ring is damaged.	1. Check and replace O-ring. 2. Check and replace trigger valve head. 3. Check and replace trigger valve stem, seal or O-ring.
Air leaking between body and drive guide	Damaged piston O-ring or bumper	Check and replace O-ring or bumper.
Air leaking between body and cylinder cap	1. Loose Screw. 2. Damaged Seal.	1. Tighten screws. 2. Check and replace seal.
Fasteners are driven too deep	1. Worn bumper. 2. Air pressure is too high.	1. Replace bumper. 2. Adjust the air pressure. 3. Adjust the depth wheel.
Runs slowly or has power loss	1. Insufficient oil. 2. Insufficient air supply. 3. Broken spring in cylinder cap. 4. Exhaust port in cylinder cap is blocked.	1. Lubricate as instructed. 2. Check air supply. 3. Replace spring. 4. Replace damaged internal parts.
Tool skips a fastener	1. Worn bumper or damaged spring. 2. Dirt in drive guide. 3. Inadequate airflow to tool. 4. Worn or dry O-ring on piston. 5. Damaged O-ring on trigger valve. 6. Cylinder cap seal leaking.	1. Replace bumper or pusher spring. 2. Clean drive channel of front plate. 3. Check hose and compressor fittings. 4. Replace O-ring or lubricate. 5. Replace O-ring. 6. Replace seal.
Fasteners repeatedly jam	1. Joint guide is worn. 2. Fasteners are wrong size or damaged. 3. Magazine or front plate screws are loose. 4. Blade in piston assembly is damaged.	1. Replace joint guide. 2. Use the recommended and undamaged fasteners. 3. Tighten screws. 4. Replace piston assembly.
Tool will not drive down tight	1. Worn blade in piston assembly. 2. Lack of power. 3. Slow cycling and loss of power.	1. Replace piston assembly. 2. Adjust to adequate air pressure. 3. Check cylinder cap spring for broken coils or reduced length. Check if exhaust port of cylinder cap is restricted.

LIMITED TWO YEAR WARRANTY

WEN Products is committed to build tools that are dependable for years. Our warranties are consistent with this commitment and our dedication to quality.

LIMITED WARRANTY OF WEN CONSUMER POWER TOOLS PRODUCTS FOR HOME USE
GREAT LAKES TECHNOLOGIES, LLC ("Seller") warrants to the original purchaser only, that all WEN consumer power tools will be free from defects in material or workmanship for a period of two (2) years from date of purchase. Ninety days for all WEN products, if the tool is used for professional use.

SELLER'S SOLE OBLIGATION AND YOUR EXCLUSIVE REMEDY under this Limited Warranty and, to the extent permitted by law, any warranty or condition implied by law, shall be the repair or replacement of parts, without charge, which are defective in material or workmanship and which have not been misused, carelessly handled, or misrepaired by persons other than Seller or Authorized Service Center. To make a claim under this Limited Warranty, you must make sure to keep a copy of your proof of purchase that clearly defines the Date of Purchase (month and year) and the Place of Purchase. Place of purchase must be a direct vendor of Great Lakes Technologies, LLC. Third party vendors such as garage sales, pawn shops, resale shops, or any other secondhand merchant void the warranty included with this product. Contact techsupport@wenproducts.com or 1-800-232-1195 to make arrangements for repairs and transportation.

When returning a product for warranty service, the shipping charges must be prepaid by the purchaser. The product must be shipped in its original container (or an equivalent), properly packed to withstand the hazards of shipment. The product must be fully insured with a copy of the warranty card and/or the proof of purchase enclosed. There must also be a description of the problem in order to help our repairs department diagnose and fix the issue. Repairs will be made and the product will be returned and shipped back to the purchaser at no charge.

THIS LIMITED WARRANTY DOES NOT APPLY TO ACCESSORY ITEMS THAT WEAR OUT FROM REGULAR USAGE OVER TIME INCLUDING BELTS, BRUSHES, BLADES, ETC.
ANY IMPLIED WARRANTIES SHALL BE LIMITED IN DURATION TO ONE (1) YEAR FROM DATE OF PURCHASE. SOME STATES IN THE U.S., SOME CANADIAN PROVINCES DO NOT ALLOW LIMITATIONS ON HOW LONG AN IMPLIED WARRANTY LASTS, SO THE ABOVE LIMITATION MAY NOT APPLY TO YOU.

IN NO EVENT SHALL SELLER BE LIABLE FOR ANY INCIDENTAL OR CONSEQUENTIAL DAMAGES (INCLUDING BUT NOT LIMITED TO LIABILITY FOR LOSS OF PROFITS) ARISING FROM THE SALE OR USE OF THIS PRODUCT. SOME STATES IN THE U.S. AND SOME CANADIAN PROVINCES DO NOT ALLOW THE EXCLUSION OR LIMITATION OF INCIDENTAL OR CONSEQUENTIAL DAMAGES, SO THE ABOVE LIMITATION OR EXCLUSION MAY NOT APPLY TO YOU.

THIS LIMITED WARRANTY GIVES YOU SPECIFIC LEGAL RIGHTS, AND YOU MAY ALSO HAVE OTHER RIGHTS WHICH VARY FROM STATE TO STATE IN THE U.S., PROVINCE TO PROVINCE IN CANADA AND FROM COUNTRY TO COUNTRY.

THIS LIMITED WARRANTY APPLIES ONLY TO PORTABLE ELECTRIC TOOLS, BENCH POWER TOOLS, OUTDOOR POWER EQUIPMENT AND PNEUMATIC TOOLS SOLD WITHIN THE UNITED STATES OF AMERICA, CANADA AND THE COMMONWEALTH OF PUERTO RICO. FOR WARRANTY COVERAGE WITHIN OTHER COUNTRIES, CONTACT THE WEN CUSTOMER SUPPORT LINE.

THANKS FOR REMEMBERING WEN®