HESSAIRE
COOL AIR ANYWHERE

SHUTTER FAN INSTALLATION

Tools/Materials Needed:

- Drill/drill bits/phillips bit
- Ratchet/Socket set
- Sealant/Caulking
- Mounting Fasteners

Warning:

General Safety Instructions

Before installing or servicing, disconnect all power. Keep hands and body parts clear of all moving parts when installing or servicing.
Read and follow all instructions, cautions and warnings. Failure to do so could result in personal injury, death or property damage.
Electrical connections, installation and maintenance must be done by qualified personnel in accordance with all applicable codes. Unit must be adequately grounded.
To reduce the risk of fire or electrical shock, do not expose this fan to water or touch electrically live components.
Free rotation of the propeller is critical. It must not touch any part of the guard or shutter.
Ensure that all power cords do not come in contact with any sharp edges, hot surfaces or chemicals. Immediately replace any damaged cords.

Caution: ***Before operating your new fan, check blade for proper torque, check all fasteners for tightness and assure screens and/or shutters are securely in place.***

Caution: ***OSHA requires OSHA compliant guards within 7ft of the floor or working level.***

Fan Installation & Operation

For framing dimensions, refer to rough-in opening dimensions shown in the table below.
Position the fan for desired airflow. Air will discharge on the side of the fan facing the shutter.
Ensure the fan is fastened securely in the opening to avoid excess "rattling" or vibration. Fasteners not included.
Shutter mounted exhaust fan sizes 8" - 24" include a 10ft 115v cord/plug end.
Refer to label on motor junction box for wiring diagram.
Ensure that the area in front of and behind the fan is clear of any objects that may interfere with airflow.
Adequate intake air must be available to the fan for proper exhausting of air.
The gravity shutters will open when the fan is powered and will close when the fan is shut off.
Check for excessive vibration while fan is running.

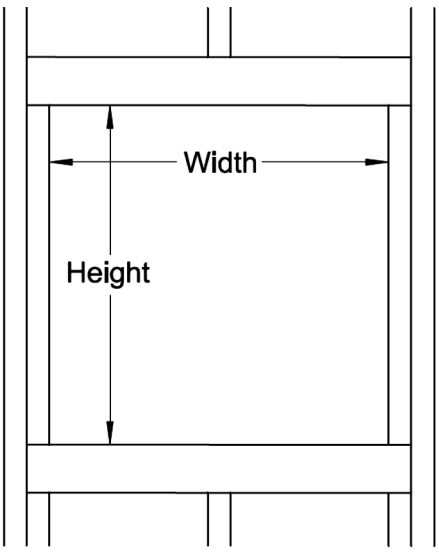

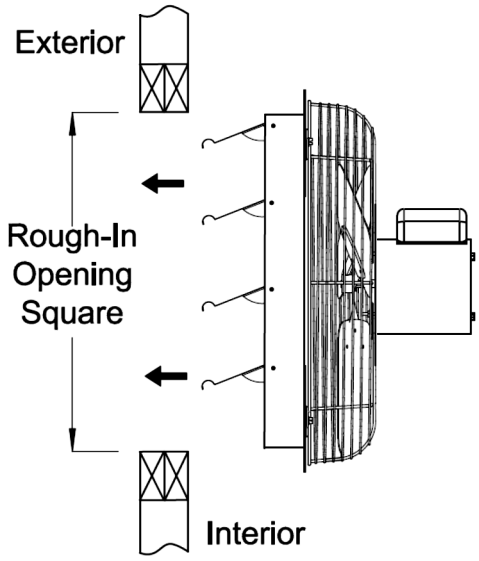

PN:	Height	Width
8SFV-H	8.50"	8.50"
10SFV-H	10.50"	10.50"
12SF3-H	12.50"	12.50"
12SFV-H	12.50"	12.50"
14SFV-H	14.50"	14.50"
16SF3-H	16.50"	16.50"
16SFV-H	16.50"	16.50"
18SF-H	18.50"	18.50"
18SFV-H	18.50"	18.50"
20SF3-H	20.50"	20.50"
20SFV-H	20.50"	20.50"
24SF2-H	24.50"	24.50"
24SFV-H	24.50"	24.50"
30SF8N240	30.50"	30.50"
36SF8N370	36.50"	36.50"