HEADBOARD

afifurnishings.com

ASSEMBLY INSTRUCTIONS

Before assembling your headboard, please read through these instructions carefully and familiarize yourself with the different parts.
ATTENTION! If you receive a damaged or defective item, please contact afifurnishings at customerservice@afifurnishings.com or 1-800-955-3726

READY TO ASSEMBLE

PARTS LIST

1	HEADBOARD PANEL	2 PCS
2	LEFT POST	1 PC
3	RIGHT POST	1 PC
4	TOP RAIL	1 PC
5	MID RAIL	1 PC
6	BOTTOM RAIL	1 PC

Instructions apply for bed sizes
TWIN > FULL > QUEEN

HARDWARE

A JCB M6 X 110mm - 4 pcs
Spare - 1 pc

B Barrel Nut - 4 pcs
Spare - 1 pc

C JCB M8 X 15mm (5/8") - 4 pcs

D Wood Dowel - 10 pcs
Spare - 1 pc

E Allen wrench - 1pc
Spare - 1pc

Assembly headboard to open bed frame

HARDWARE FOR METAL BED FRAME

F JCB M6 X 25mm (1") - 4 pcs
Spare - 1 pc

G Flat washer - 4 pcs
Spare - 1 pc

H Split washer - 4 pcs
Spare - 1 pc

NOTE: WE INCLUDE SPARE HARDWARE IN CASE DAMAGE OCCURS DURING ASSEMBLY.

Step 1 Insert all wooden dowels (D) into the locator holes on (4)(5) and(6) as shown below.

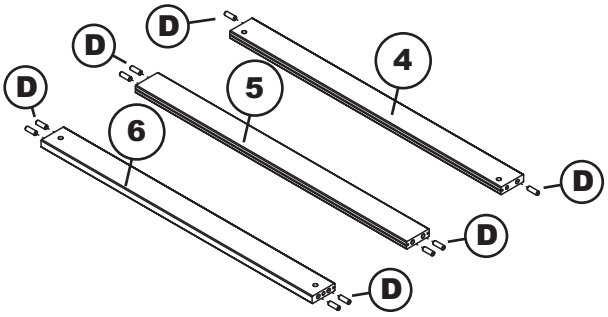

Adult assembly

D
Wood Dowel

Step 2 Lay the left post (2) bracket face down on smooth surface. Connect top rail (4), mid rail (5) and bottom rail (6) as shown below, using JCB M6 X 110mm (A) and barrel nut (B). Tighten with the Allen wrench (E).

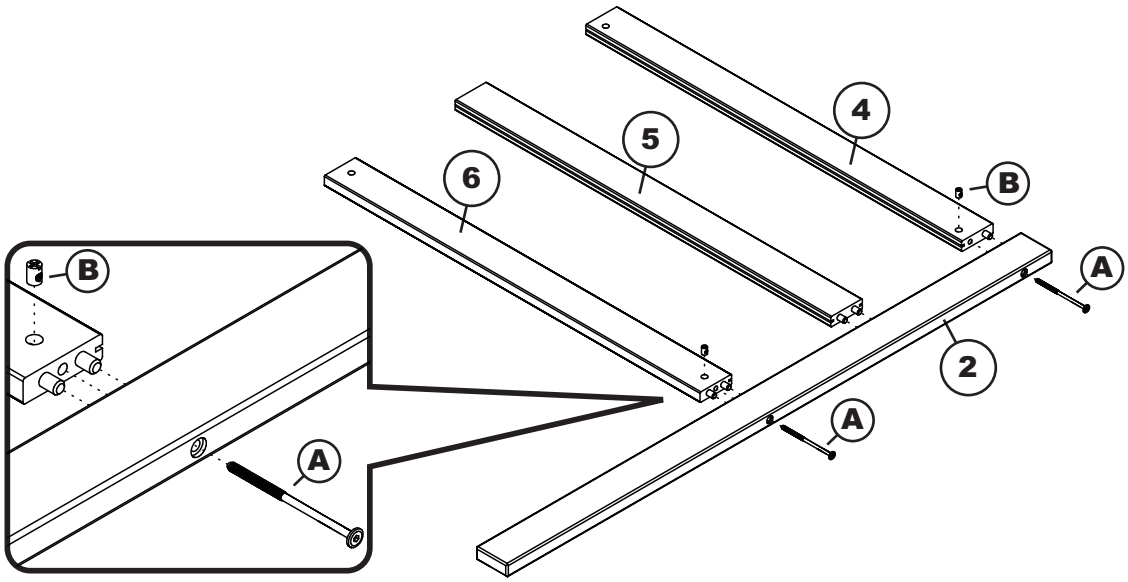

Adult assembly

A
JCB M6 X 110mm

B
Barrel Nut

PO:

CODE	ITEM	ITEM	ITEM
HB-ISL-NHO	G-11912X	G-11913X	G-11914X

Step 3 Guide the headboard panel (1) in carefully so that it won't jump out of its grooves. Be sure it fits fully into the groove at the end (in the post) before fitting the other post.

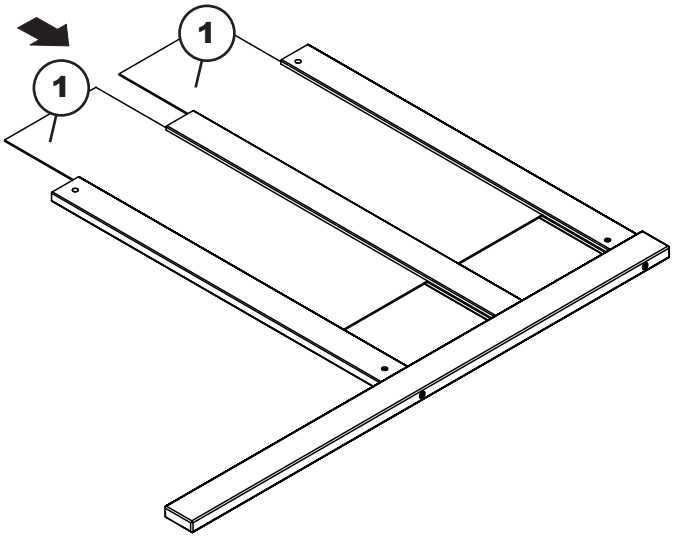

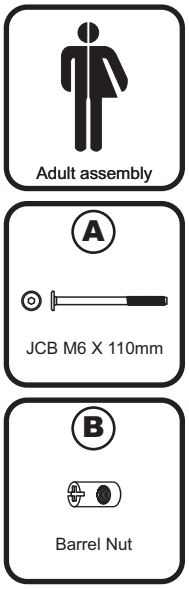

Step 4 Attach the right post (3) to headboard assembly as shown below, using JCB M6 X 110mm (A) and barrel nut (B).
Tighten with Allen wrench (E)

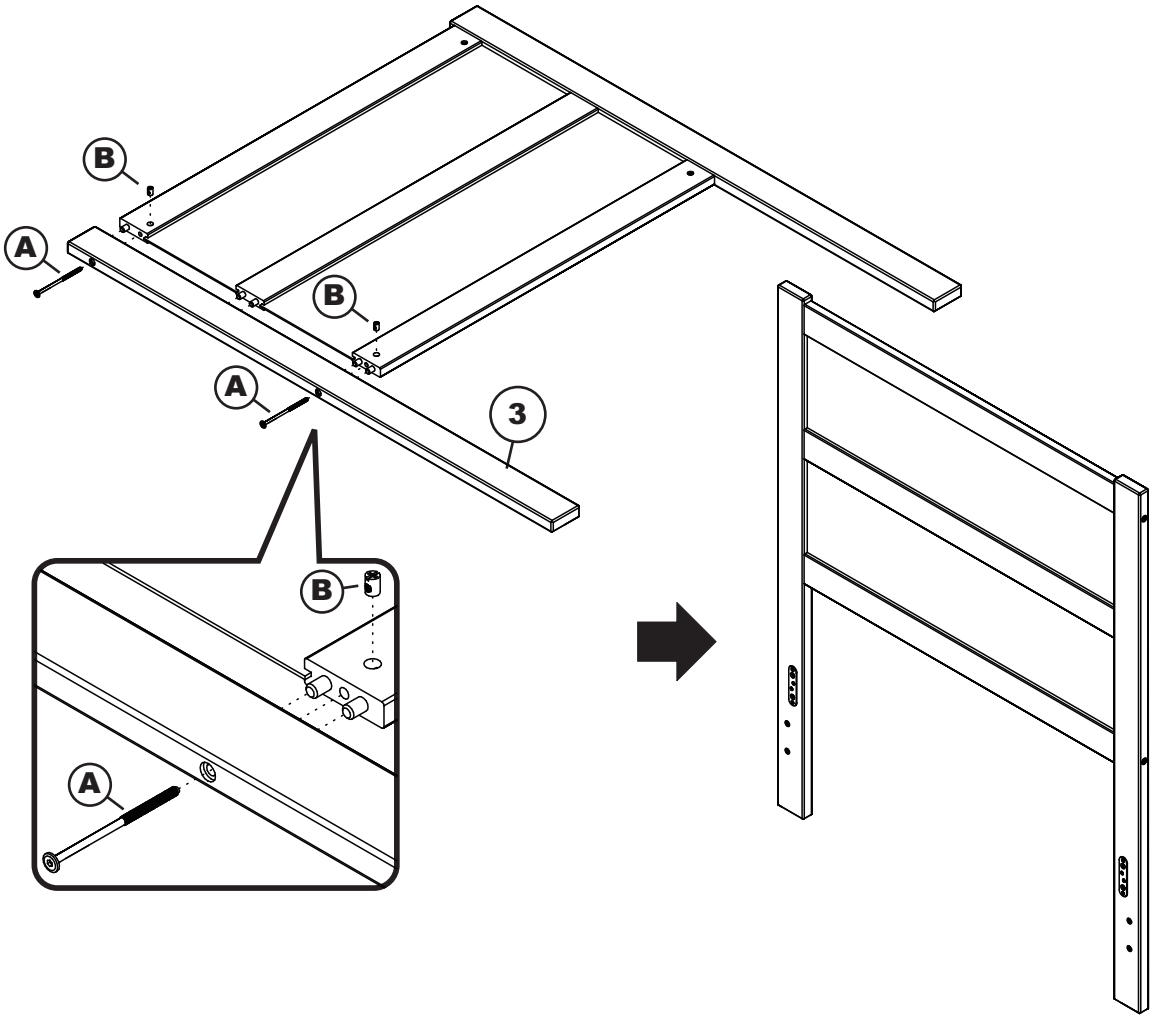

FOR BED FRAME ASSEMBLY follow assembly instructions included with your bed frame.
If you purchased a wood headboard to attach to metal bed frame, please refer to page 3.

ASSEMBLY INSTRUCTIONS

Before assembling your bed, please read through these instructions carefully and familiarize yourself with the different parts.

Instructions apply for bed sizes
Twin > Full > Queen

Metal bed frames are sold separately from wood headboards. The hardware shown on this page is supplied with your wood headboard for attaching the bed frame to the headboard.
The metal bed frame is supplied with its own assembly instructions and hardware.

Step 1 Attach the headboard assembly to the metal bed frame using JCB M6 X 1" (F), flat washer (G), and split washer (H) then tighten with Allen wrench (E) as shown below.

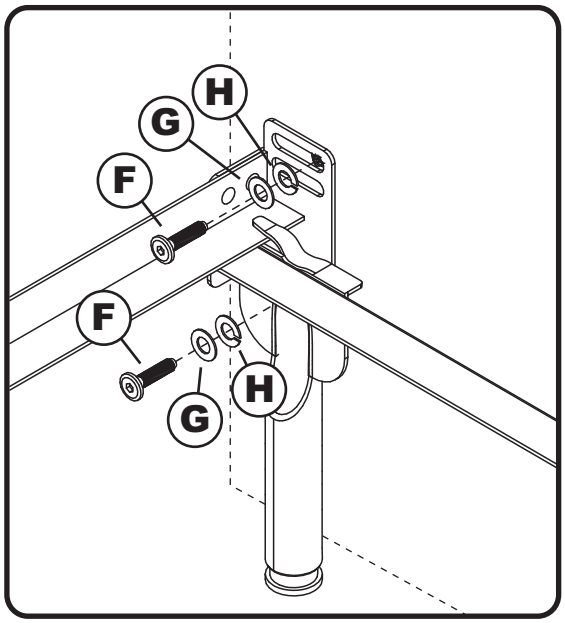

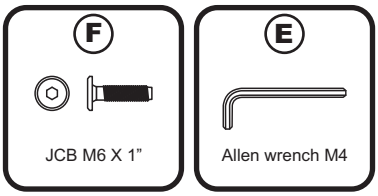

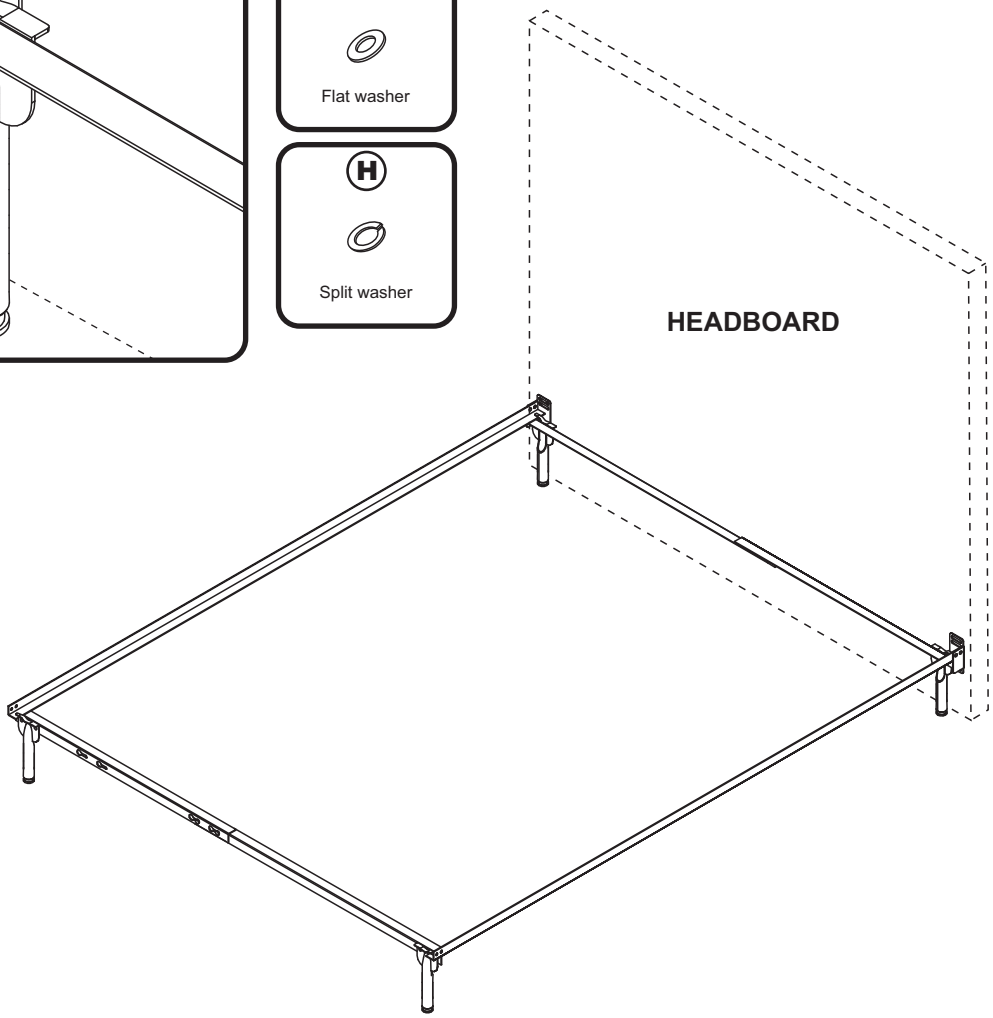

Congratulations!

Your bed is now ready for use.
To ensure lasting safety, we recommend that you periodically check that all screws are tight and all parts are secure.

BED FRAME

afifurnishings.com

FULL
ASSEMBLY INSTRUCTIONS

Before assembling your bed frame, please read through these instructions carefully and familiarize yourself with the different parts.

ATTENTION! If you receive a damaged or defective item, please contact afifurnishings at customerservice@afifurnishings.com or 1-800-955-3726

PARTS LIST

1	FOOT RAIL	1 PC
2	LEFT LEG	1 PC
3	RIGHT LEG	1 PC
4	SIDE RAILS	2 PCS
5	SLAT KIT	2 SETS
6	SLAT SUPPORT 1	1 PC
7	SLAT SUPPORT 2	1 PC
8	SUPPORT LEGS	3 PCS

HARDWARE

- A JCB M6 X 110mm (4 3/8") - 2 pcs, Spare - 1 pc
- B Barrel nut - 2 pcs
- C JCB M8 X 15mm (5/8") - 4 pcs
- D Wood screw(1 1/4") - 25 pcs, Spare - 2 pcs
- E JCB M6 X 25mm(1") - 4pcs
- F Cap nut - 4pcs
- G Allen Screw - 3pcs
- H Allen wrench M6 - 1pc
- I Allen wrench M4 - 1pc, Spare - 1pc

NOTE: WE INCLUDE SPARE HARDWARE IN CASE DAMAGE OCCURS DURING ASSEMBLY.

Step 1

Attach the legs (2) and (3) to foot rail (1), using JCB M6 X 110mm (A) and barrel nut (B).
Tighten with the Allen wrench M4 (I).

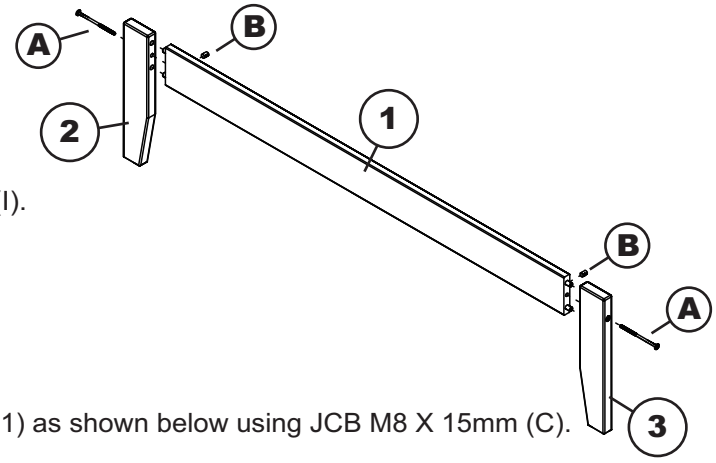

Adult assembly

A JCB M6 X 110mm

B Barrel nut

Step 2

Attach side rails (4) to the foot rail (1) as shown below using JCB M8 X 15mm (C).
Tighten with Allen wrench M6 (H).

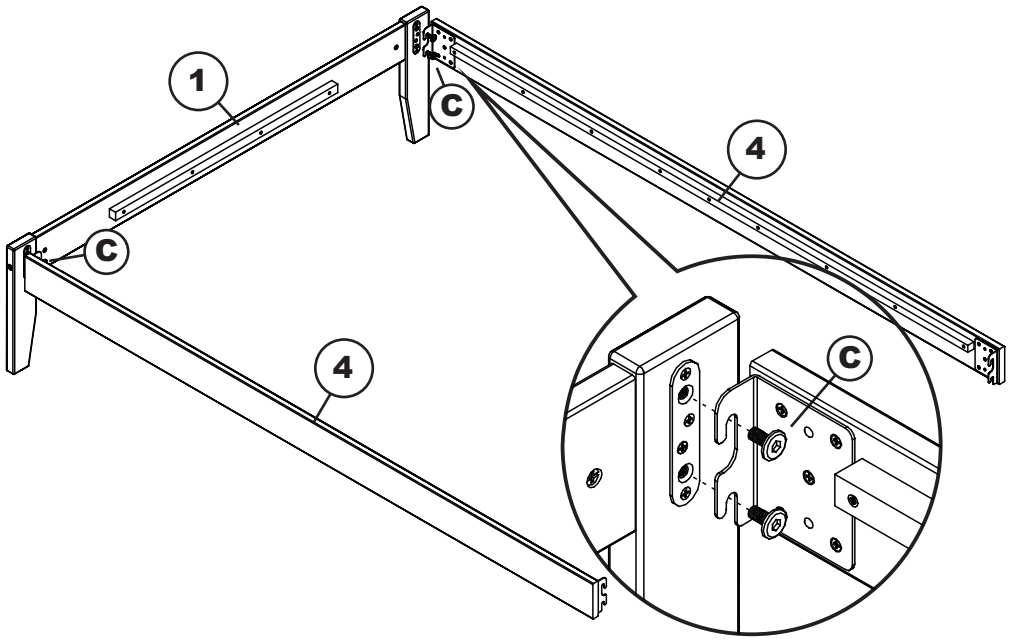

C JCB M8 X 15mm

PO:

CODE	ITEM
FR-OP-ISL	G-21803X

BED FRAME

afifurnishings.com

FULL

READY TO ASSEMBLE

Step 3

Attach open bed frame to the headboard as shown below using 4 JCB M8 X 15mm bolts that are supplied with your headboard. Tighten with the Allen wrench M6 (E).

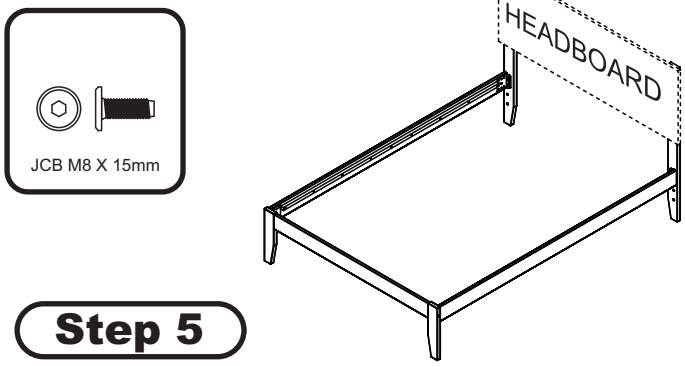

Step 4

Attach support legs (8) to slat support 1 & 2 (6)(7) as shown below using Allen screw (G) tighten with Allen wrench M4 (I).

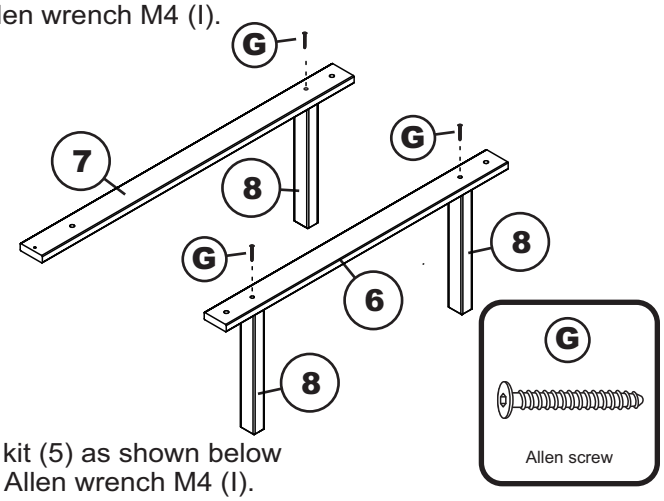

Step 5

Attach slat support 1(6) and slat support 2 (7) to the slat kit (5) as shown below using JCB M6 X 25mm (E) and cap nut (F). Tighten with Allen wrench M4 (I).

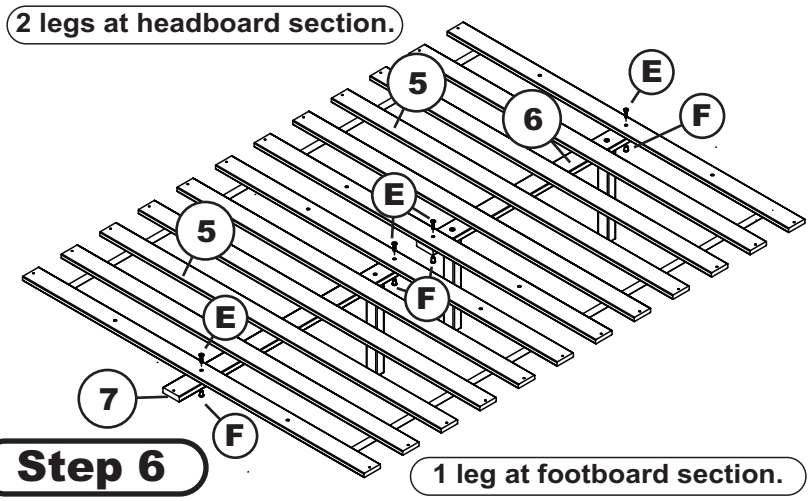

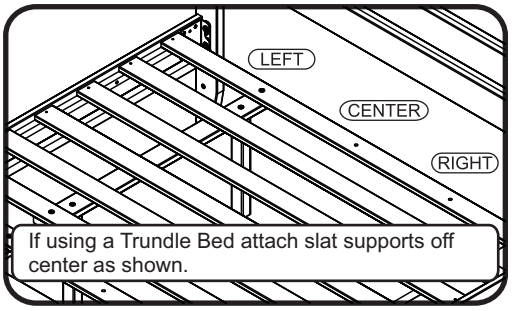

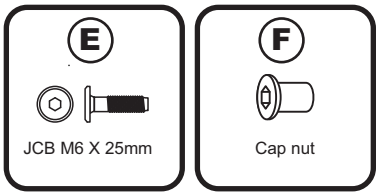

Step 6

Attach 2 slat kits (5) to the open bed frame as shown below using wood screws 1 1/4" (D). Tighten with Phillips head screw driver. (customer supplied)

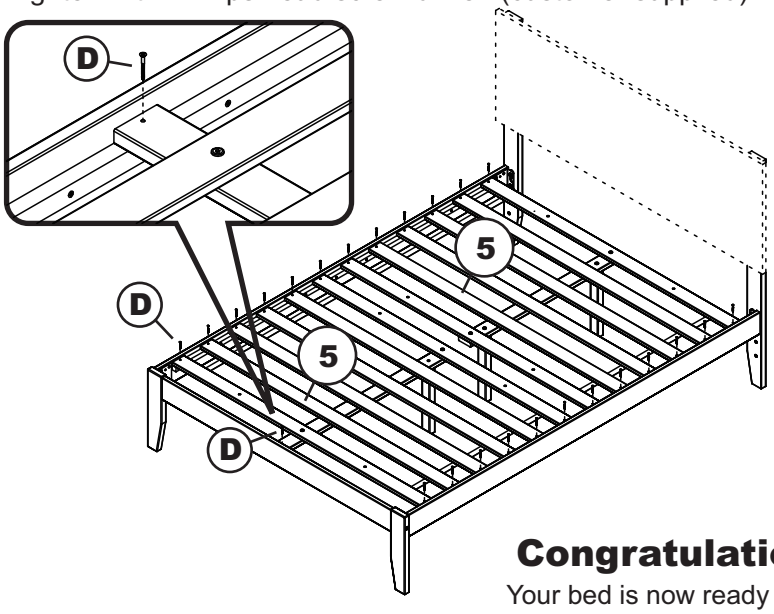

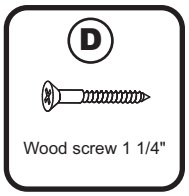

Congratulations!

Your bed is now ready for use.

We recommend that you periodically recheck that all screws are tight to ensure lasting safety.

BED DRAWER

afifurnishings.com

FULL ASSEMBLY INSTRUCTIONS

Before assembling your bed drawer, please read through these instructions carefully, familiarize yourself with the different parts.

ATTENTION! If you receive a damaged or defective item, please contact afifurnishings at customerservice@afifurnishings.com or 1-800-955-3726

Allen wrench

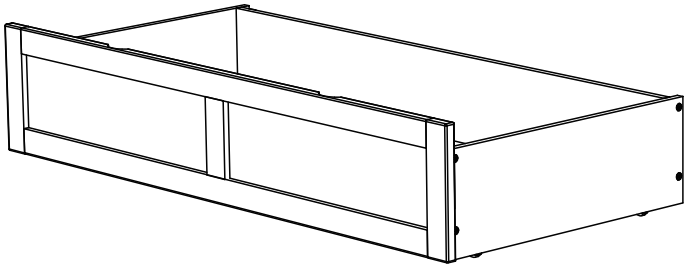

Adult assembly

NOTE: WE INCLUDE SPARE HARDWARE IN CASE DAMAGE OCCURS DURING ASSEMBLY.

HARDWARE

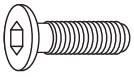

A JCB M6 X 1"(25mm) - 8 pcs
Spare - 1 pc

B Wood Screw X 1 1/4"(32mm) - 2 pcs
Spare - 1 pc

C Allen wrench - 1 pc
Spare - 1 pc

PARTS LIST

01	HARDWARE	1 BOX
02	DRAWER FACE	1 PC
03	DRAWER SIDE	2 PCS
04	DRAWER BACK	1 PC
05	DRAWER BOTTOM	2 PCS
06	DRAWER MIDDLE	1 PC
07	DRAWER CENTER SUPPORT	1 PC

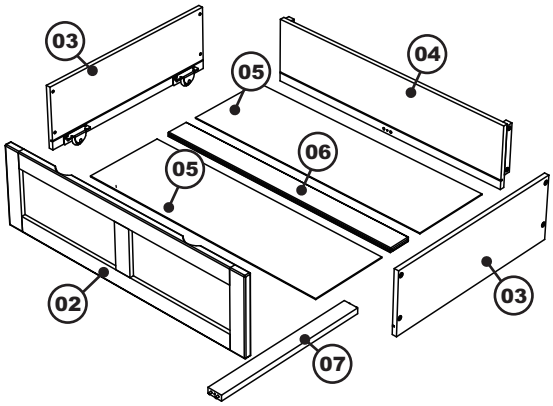

Step 1 Lay the drawer face (02) on smooth, flat surface so the drawer bottom (05) groove is facing upwards. Attach the drawer sides (03) to drawer face (02) using JCB M6 X 1" (A). Align groove inside drawer side with groove in drawer face. Tighten with Allen wrench (C).

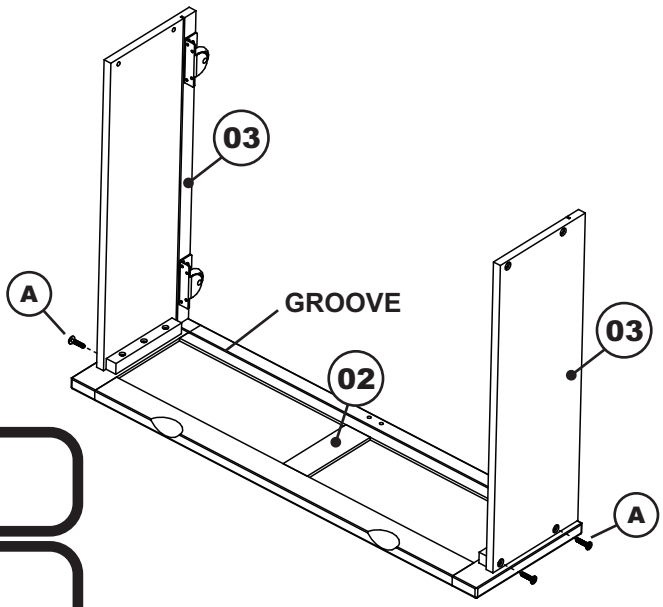

Adult assembly

A

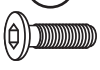

JCB M6 X 1"

C

Allen wrench

CODE	ITEM
ST-DR1-ISL	G-31803X

PO :

FULL

Step 2 Guide the drawer bottoms (05) and drawer middle (06) in carefully so that they align inside grooves. Be sure it fits fully into the face and side groove before attaching the drawer back (04).
Attach drawer center support (07) to bottom of drawer face using wood screw 1 1/4" (B). Tighten with Phillips head screw driver. (Customer supplied)

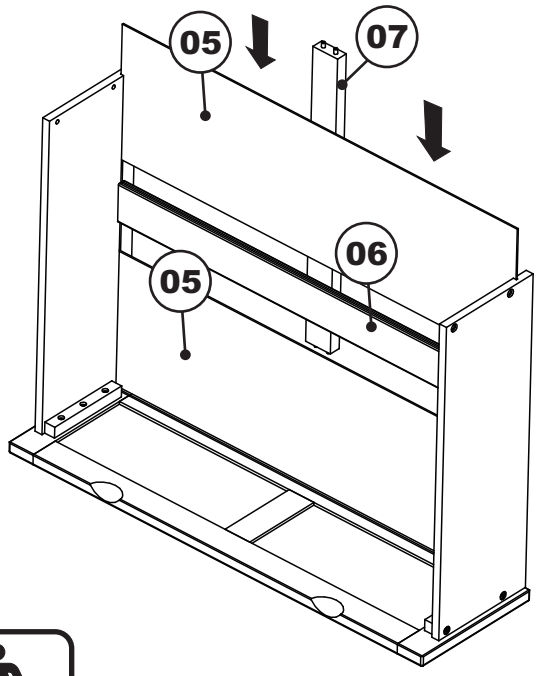

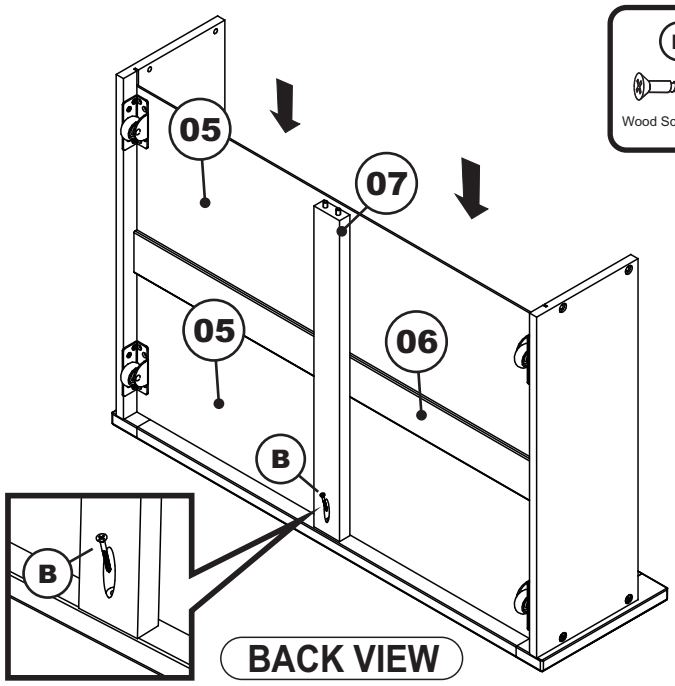

Step 3 Attach drawer back (04) to bed drawer assembly as shown. Use JCB M6 X 1”(A). Tighten with Allen wrench (C). Use wood screws 1 1/4" (B) to finish attaching drawer center support (07) to drawer back (04) Tighten with Phillips head screw driver. (customer supplied)

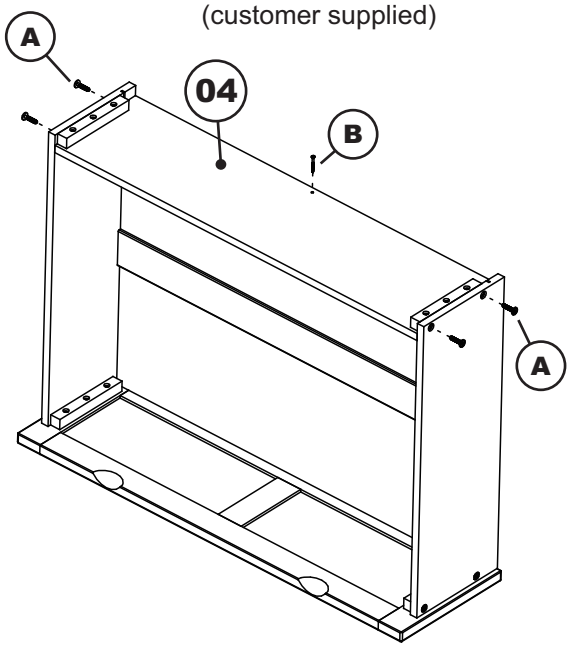

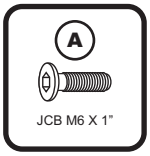

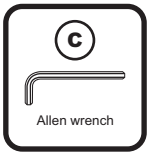

Congratulations!

Your bed drawer is now ready for use.
We recommend that you periodically recheck that all screws are tight to ensure lasting safety.