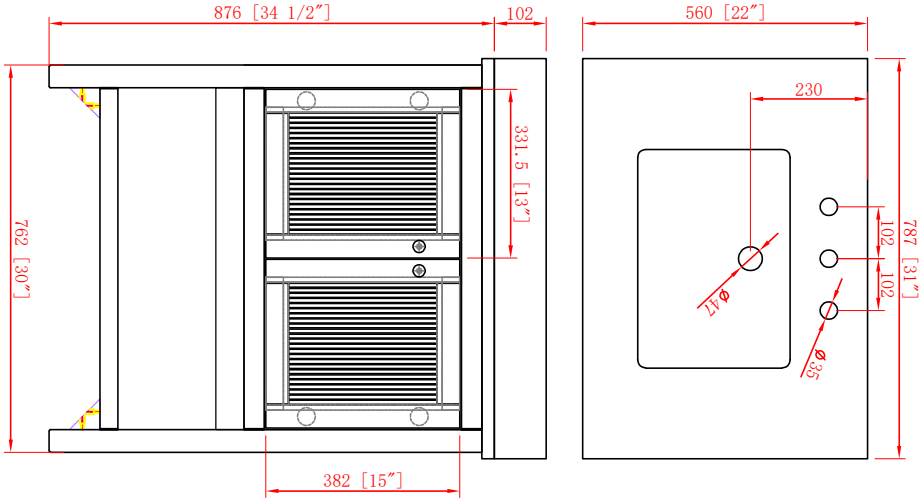
876 [34 1/2"]
102
560 [22"]
230
331.5 [13"]
762 [30"]
787 [31"]
102
102
Ø47
Ø35
382 [15"]

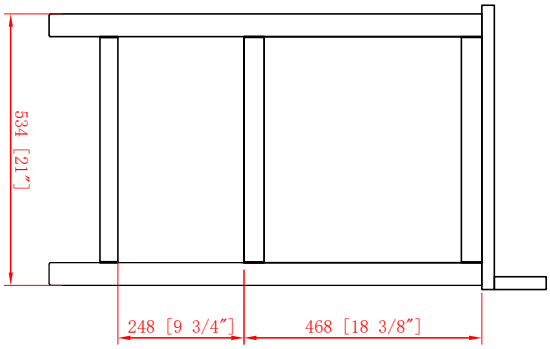
534 [21"]
248 [9 3/4"]
468 [18 3/8"]

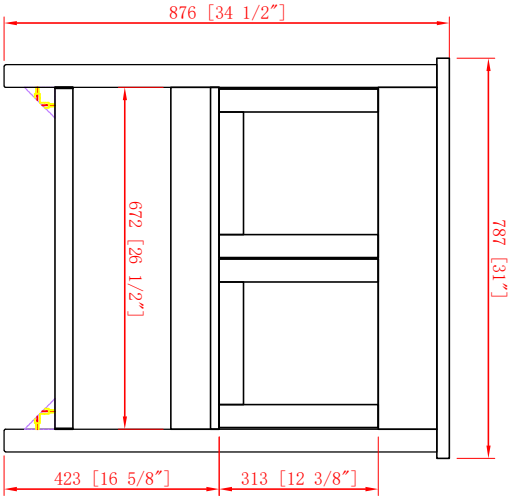
876 [34 1/2"]
672 [26 1/2"]
787 [31"]
423 [16 5/8"]
313 [12 3/8"]

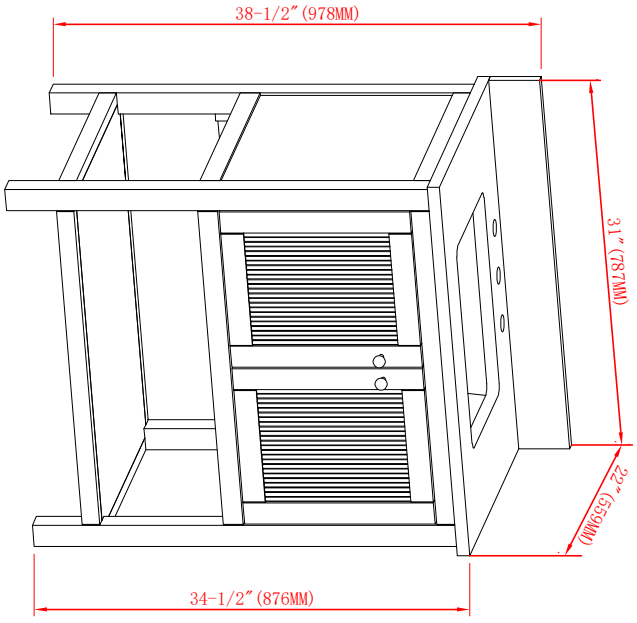
38-1/2"(978MM)
31"(787MM)
22"(559MM)
34-1/2"(876MM)