GLACIER BAY®

**Item # 1008339498**
**Model # LW1829**

# USE AND CARE GUIDE

## RECTANGULAR VESSEL SINK

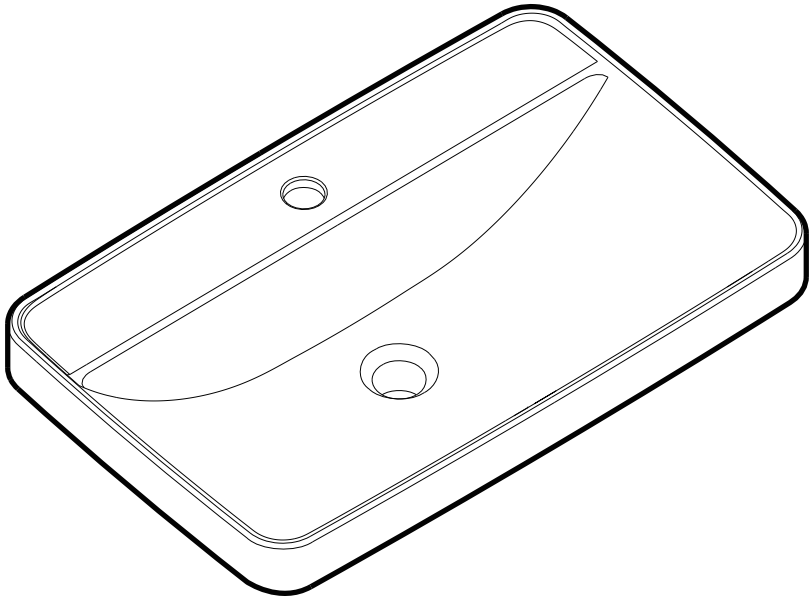

Questions, problems, missing parts? Before returning to the store,
call Glacier Bay Customer Service
8 a.m. – 7 p.m., EST, Monday-Friday, 9 a.m. – 6 p.m., EST, Saturday

**1-855-HD-GLACIER**

**HOMEDEPOT.COM/GLACIERBAY**

***THANK YOU***

*We appreciate the trust and confidence you have placed in Glacier Bay through the purchase of this vessel sink. We strive to continually create quality products designed to enhance your home. Visit us online to see our full line of products available for your home improvement needs. Thank you for choosing Glacier Bay!*

# Table of Contents

**Table of Contents** ..... 2
**Safety Information** ..... 2
**Warranty** ..... 2
**Pre-installation** ..... 3
Planning Installation ..... 3
Tools Required ..... 3
Package Contents ..... 3
**Installation** ..... 4
**Care and Cleaning** ..... 5

# Safety Information

**WARNING:** Handle with care. Vitreous chinaware is glass-like with sharp edges if broken. Do not drop, handle roughly, or overtighten bolts.

**NOTICE:** Observe local plumbing and building codes.

# Warranty

Glacier Bay products are manufactured with superior quality standards and workmanship and are backed by our limited lifetime warranty. Glacier Bay products are warranted to the original consumer purchaser to be free of defects in materials or workmanship. We will replace FREE OF CHARGE any product or parts that proves defective. Simply, return the product / part to any of The Home Depot retail locations or call 1-855-HD-GLACIER (1-855-434-5224) to receive the replacement item. Proof of purchase (original sales receipt) from the original consumer purchaser must be made available for all Glacier Bay warranty claims.

This warranty excludes incidental/inconsequential damages and failures due to misuse, abuse or normal wear and tear. This warranty excludes all industrial, commercial and business usage, whose purchasers are hereby, extended a five-year limited warranty from the date of purchase, with all other terms of this warranty applying except the duration of warranty.

Some states and provinces do not allow the exclusion or limitation of incidental or consequential damages, so the above limitations may not apply to you. This warranty gives you specific legal rights and you may also have other rights that vary from state to state and province to province. Contact the Customer Service Team at 1-855-HD-GLACIER or visit www.HOMEDEPOT.COM/GLACIERBAY.

# Pre-installation

## PLANNING INSTALLATION

Before installation, remove your new vessel sink and carefully inspect it for damage. Return the vessel sink to its packaging until you are ready to install it.

The manual contains important care and cleaning instructions. Please review these instructions carefully.

Estimated Assembly Time: 60 minutes + caulk setting time (12-24 hours)

**NOTE:** It is recommended to practice the proper insertion two or three times before applying sealant.

## TOOLS REQUIRED


Safety glasses

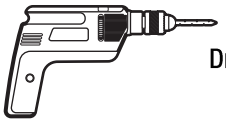
Drill


Scroll saw

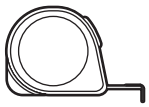
Measuring tape


Cellophane tape


Pencil


Carpenter level

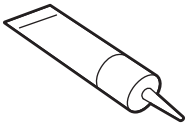
Caulk


Adjustable wrench


Pipe wrench


Phillips screwdriver


Flat blade screwdriver

## PACKAGE CONTENTS

**NOTE:** The template (B) is to be used as a guide for cutting the sink opening in the countertop, if one does not exist. To avoid possible damage to the cabinet, cut the countertop before installing it to the cabinet.

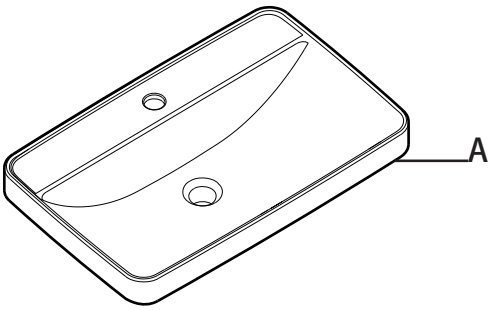


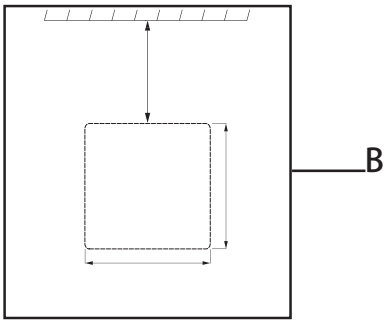


| Part | Description | Quantity |
|---|---|---|
| A | Vessel sink | 1 |
| B | Template | 1 |

# Installation

## 1 Cutting the opening

- □ Affix template (B) to the countertop at the desired location with cellophane tape.
- □ Using a pencil, mark the guidelines on the countertop following the template (B).
- □ Drill a clearance hole approximately 1/4 in. to 1/2 in. inside the perimeter line of the template (B).
- □ Cut the opening following the perimeter line of the template (B).

**NOTE:** To avoid possible damage to the cabinet, cut the countertop before installing it to the cabinet.

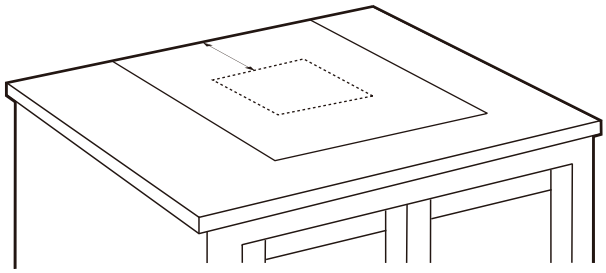

## 2 Positioning the sink

- □ Check the cutout alignment by carefully positioning the vessel sink (A) in the desired mounting position.
- □ Ensure the drain hole lines up with the cutout.

**NOTE:** It is recommended to practice the proper insertion two or three times before applying sealant.

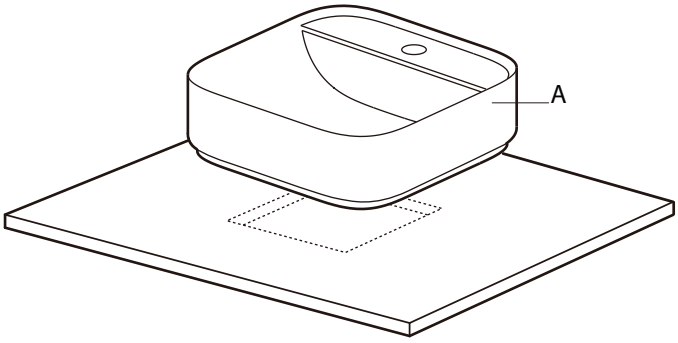


## 3 Installing the sink

- □ Apply caulk around the underside of the sink (A) rim near the edge, as shown.
- □ Carefully lower the sink (A) in place, aligning it, and press firmly.
- □ Wipe off the excess caulk.

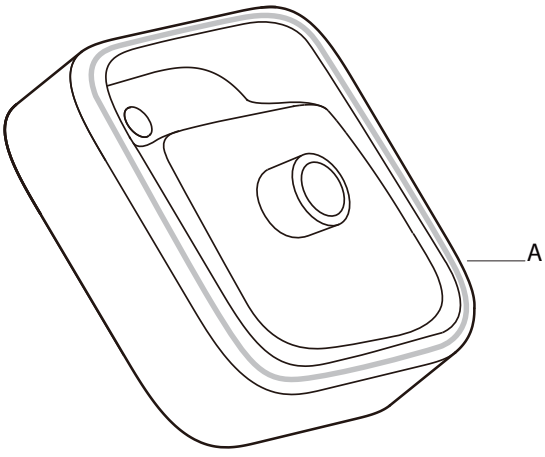


## 4 Installing the drain and plumbing

- □ Install the drain (not provided) according to the manufacturer's installation instructions.

**CAUTION:** Do not overtighten the drain assembly. This may cause the bowl to forcefully crack during installation or at some time in the future.

- □ Install the waste system, faucet, and the water supply (not provided) according to the manufacturer's installation instructions.
- □ Check for leakage.

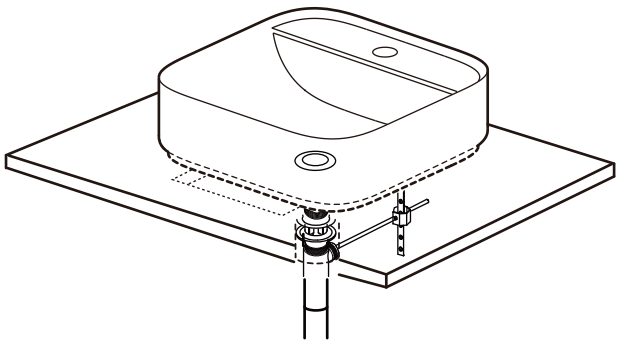

# Care and Cleaning

For best results in caring for your sink, we suggest the following:

- ☐ Clean the outside surface with mild soap, warm water, and a soft cloth.
- ☐ On stubborn stains, use a powdered detergent and damp sponge or nylon scouring pad.
- ☐ Never use abrasive scouring powders, cleansers, or pads because they will scratch, damage, and dull the surface.




Questions, problems, missing parts? Before returning to the store,
call Glacier Bay Customer Service
8 a.m. – 7 p.m., EST, Monday-Friday, 9 a.m. – 6 p.m., EST, Saturday

**1-855-HD-GLACIER**

**HOMEDEPOT.COM/GLACIERBAY**

Retain this manual for future use.