USE AND CARE GUIDE

KBS-52144



52-INCH CEILING FAN

Installation Guide



Installation video
52144-N

Questions or Support?

Email:sofucor_service@163.com
Email:sofucorceilingfan@163.com
www.sofucorfan.com

01 Table of Contents

Safety Information ---------- 02
Warranty ---------- 03
Ceiling installation ---------- 04
Accessory drawing ---------- 05
Installation procedure ---------- 06
Remote control manual ---------- 07
Match code ---------- 08
Fans Balance ---------- 09
Care and cleaning ---------- 10
Trouble shooting ---------- 11

02 Safety Information

READ ALL SAFETY INFORMATION AND INSTALLATION INSTRUCTIONS BEFORE YOU BEGIN INSTALLING THE FAN AND SANE INSTRUCTIONS.

Warning:
Kindly turn off the power when connecting cables.



1. To reduce the risk of electric shock, ensure the electricity has been turned off at the circuit breaker or fuse box before you begin.

2. All wiring must be in accordance with the National Electrical Code ANSI/NFPA 70-1999 and local electrical codes. Electrical installation should be performed by a qualified licensed electrician.

3. The outlet box and support structure must be securely mounted and capable of reliably supporting 35 lbs. (15.9 kg). Use only UL Listed outlet boxes marked "Acceptable for Fan Support of 35 lbs. (15.9 kg) or less".

4. The fan must be mounted with a minimum of 7 ft. (2.1 m) clearance from the trailing edge of the blades to the floor.

5. Do not place objects in the path of the blades.

6. To avoid personal injury or damage to the fan and other items, use caution when working around or cleaning the fan.

7. Electrical diagrams are for reference only. Light kits that are not packed with the fan must be UI-listed and marked suitable for use with the model fan you are installing. Switches must be UL General Use Switches. Refer to the instructions packaged with the light kits and switches for proper assembly.

8. After making electrical connections, spliced conductors should be turned upward and pushed carefully up into the outlet box. The wires should be spread apart with the grounded conductor and the equipment-grounding conductor on one side of the outlet box.

9. All setscrews must be checked and re-tightened where necessary before installation.

WARNING: To reduce the risk of personal injury, do not bend the blade brackets (also referred to as flanges) during assembly or after installation. Do not insert objects in the path of the blades.

WARNING: To reduce the risk of fire or electric shock, this fan is NOT suitable for use with solid-state speed controls.

WARNING: To avoid possible electrical shock, make sure that the electricity is turned off at the main power box before starting work. If you feel you do not have enough electrical wiring knowledge or experience, contact a licensed electrician.

WARNING: Electrical diagrams are for reference only. Optional use of any light kit shall be UL-listed and marked suitable for use with this fan

WARNING: To reduce the risk of fire, electrical shock or personal injury, ensure that the fan mounting bracket is supported directly from the building structure or the outlet box marked "Acceptable for Fan Support of 35 lbs. (15.9 kg) or less". Use only the screws provided with the outlet box.

03 Warranty

The supplier warrants the fan motor to be free from defects in workmanship and material present at time of shipment from the factory for a lifetime after the date of purchase by the original purchaser. The supplier also warrants that all other fan parts, excluding any glass or acrylic blades, to be free from defects in workmanship and material at the time.

of shipment from the factory for a period of two years after the date of purchase by the original purchaser. We agree to correct such defects without charge or at our option replace with a comparable or superior model if the product is returned.

To obtain warranty service, you must present a copy of the receipt as proof of purchase. All costs of removing and re-installing the product are your responsibility. Damage to any part such as by accident, misuse, improper installation, or by affixing any accessories, is not covered by this warranty.

Because of varying climatic conditions this warranty does not cover any changes in brass finish, including rusting, pitting, corroding, tarnishing, or peeling. Brass finishes of this type give their longest useful life when protected from varying weather conditions. A certain amount of “wobble” is normal and should not be considered a defect.

Servicing performed by unauthorized persons shall render the warranty invalid. There is no other express warranty. Sofucor hereby disclaims any and all warranties, including but not limited to those of merchant ability and fitness for a particular purpose to the extent permitted by law. The duration of any implied warranty which cannot be disclaimed is limited to the time period as specified in the express warranty. Some states do not allow a limitation on how long an implied warranty lasts, so the above limitation may not apply to you.

The retailer shall not be liable for incidental, consequential, or special damages arising out of or in connection with product use or performance except as may otherwise be accorded by law. Some states do not allow the exclusion of incidental or consequential damages, so the above exclusion or limitation may not apply to you. This warranty gives specific legal rights, and you may also have other rights which vary from state to state. This warranty supersedes all prior warranties. Shipping costs for any return of product as part of a claim on the warranty must be paid by the customer.

04 Three ceiling installation methods

Concrete Ceiling Mounting Bracket

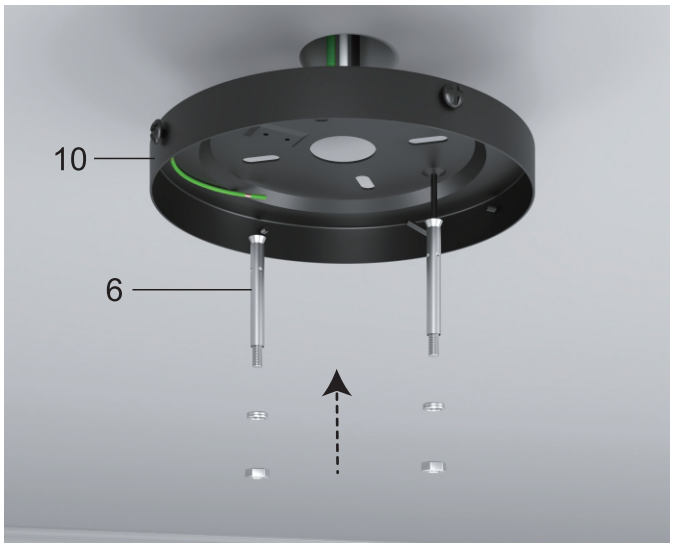

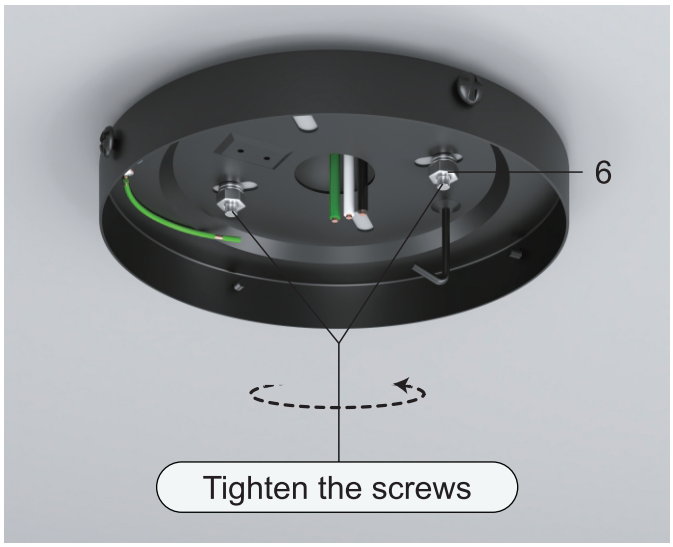

Hanger for Junction Box Mounting Bracket

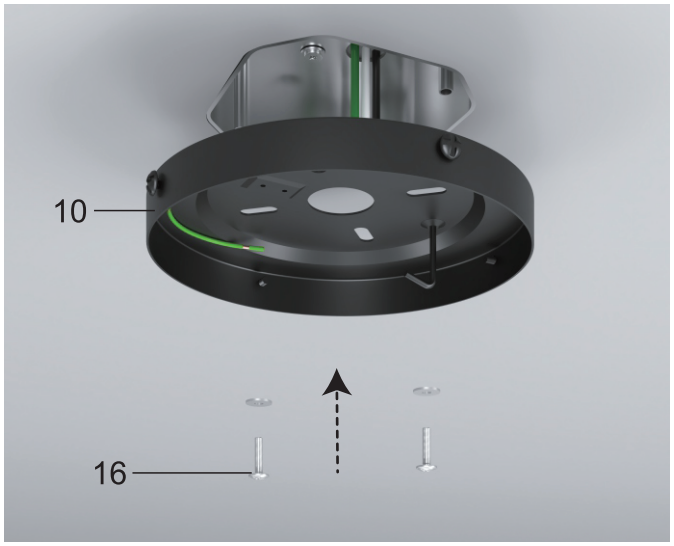

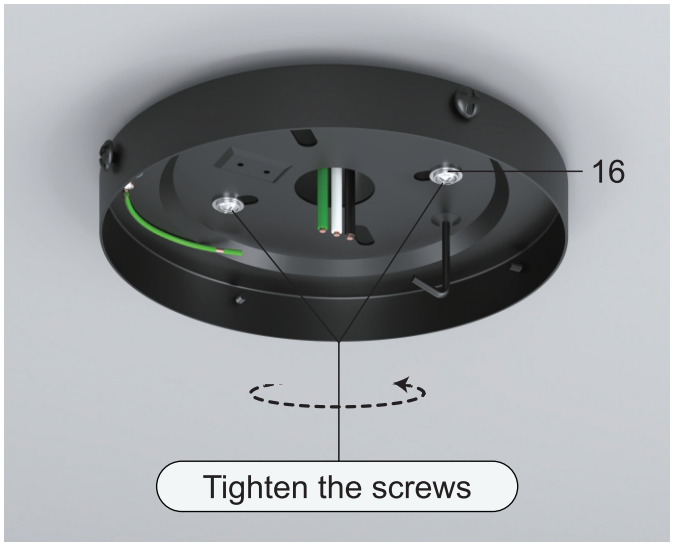

Wooden ceiling Mounting Bracket

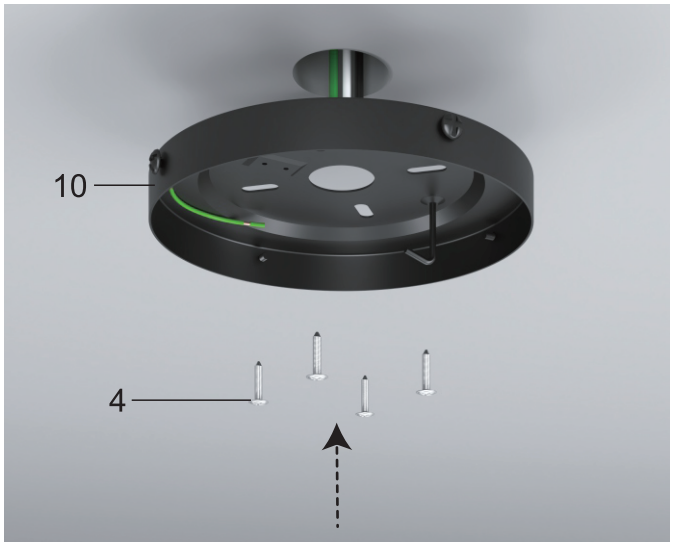

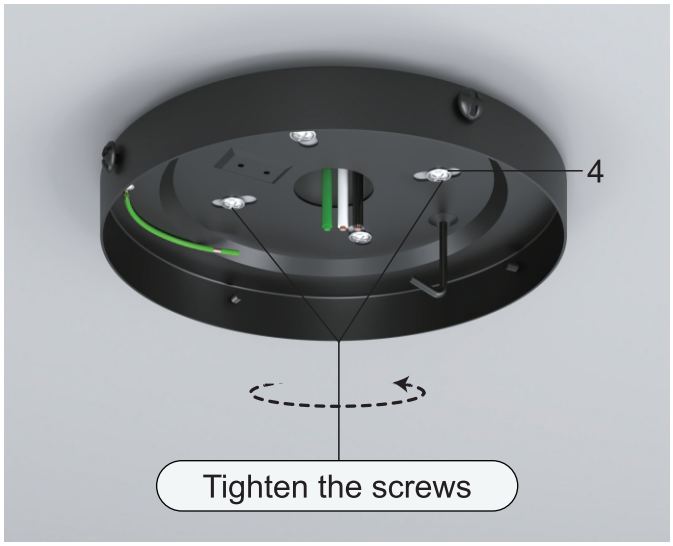

05 Accessory drawing

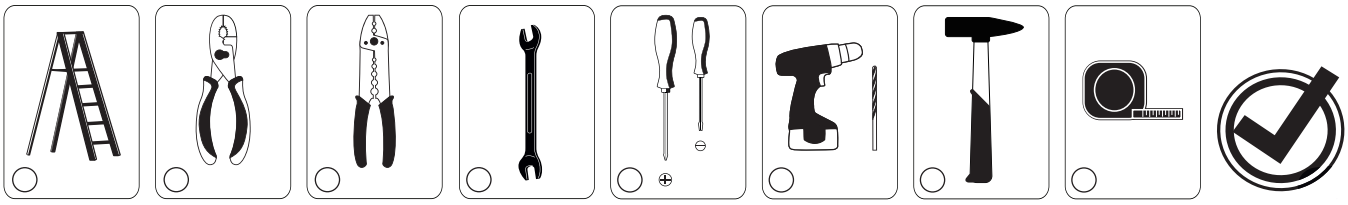







06 Installation procedure

1. Fit the gasket over the screw

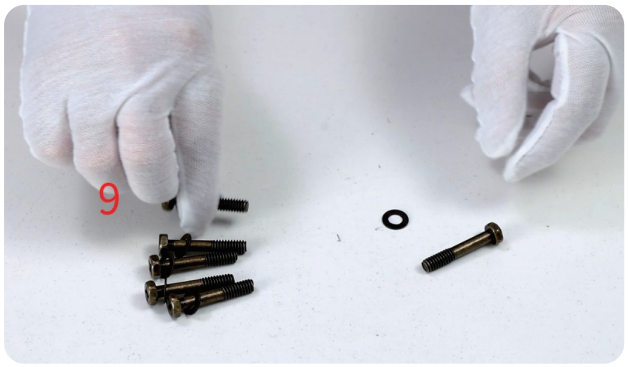

2. Place the blade gasket onto the blade, align it with the screw hole, and tighten the screw



3. Repeat install the remaining blades, and tighten all the blade screws



4. Loosen and remove the 3 silver screws pre-locked on the motor
(They will be needed later)



5. Put on the lamp panel and feed the wire plugs through the center hole



6. Tighten the 3 silver lamp panel screws



7. Loosen and remove the 3 brass light kit screws pre-locked on the lamp panel (They will be needed later)



8. Connect the light source with the wires from the motor



9. Align the screw holes and tighten the 3 brass light kit screws



10. Turn the fan over



11. Connect the wire from the ceiling fan to the receiver(Red,White and Black wires)

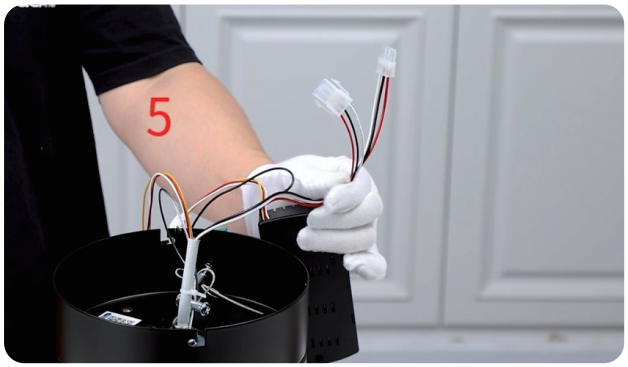

12. Connect the wire from the ceiling fan to the receiver(Red,Yellow and White wires)

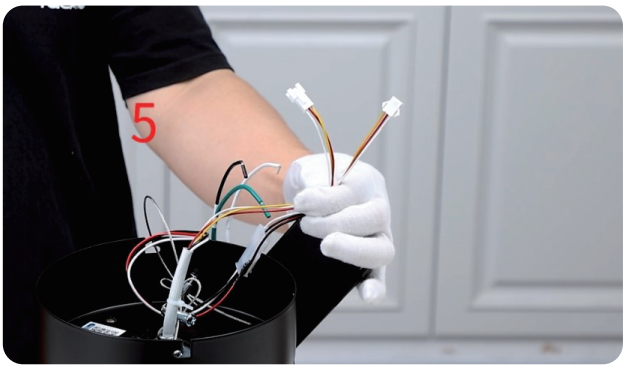

13. All wires are connected.

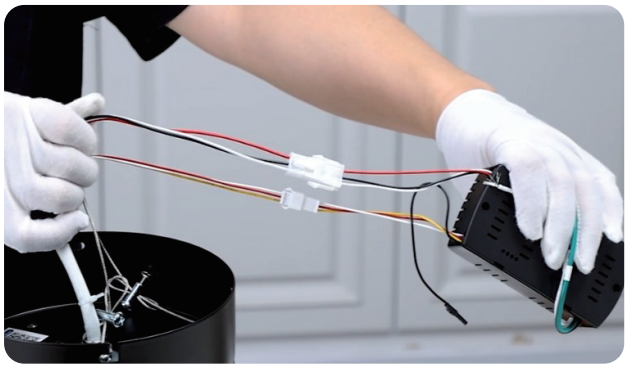

14. Tighten the screw.



15. Loosen and remove the 4 screws on the mounting bracket
(Do not remove them all)

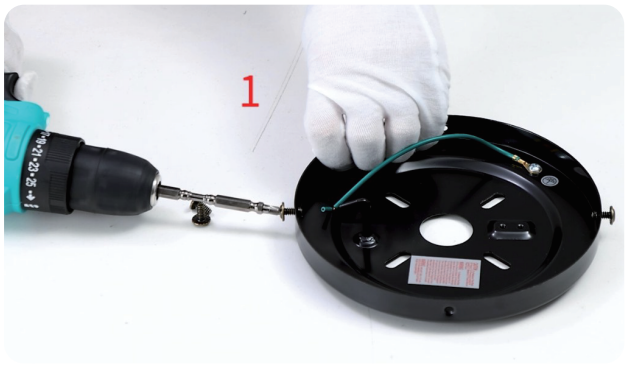

16. Place the mounting br



17. Hook the wire rope into the hook of the mounting bracket.



18. Use wire connecting nuts to connect the ground wires(Green)

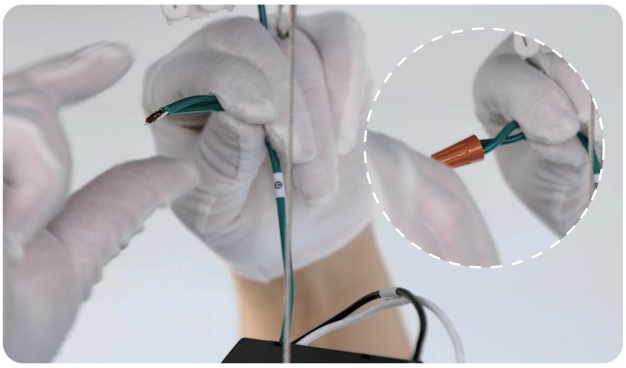

06 Installation procedure

19. Connect the fan live wire (black) to your house live wire; Connect the fan neutral wire (white) to your house neutral wire

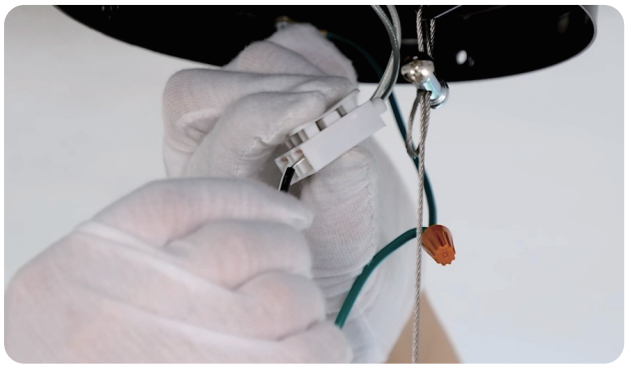

20. Attach housing onto mounting bracket, aligning the keyhole slots on the housing with the screws on mounting bracket and twist clockwise till tight.



21. Tighten the screws



22. Install the lamp shade and rotate it to lock



06 Installation procedure

WARNING: Turn off the electric power during installation and making wire connection.

1. Connect the wire which from ceiling fan into the receiver
2. Connect the wire from receiver with the wire from house.

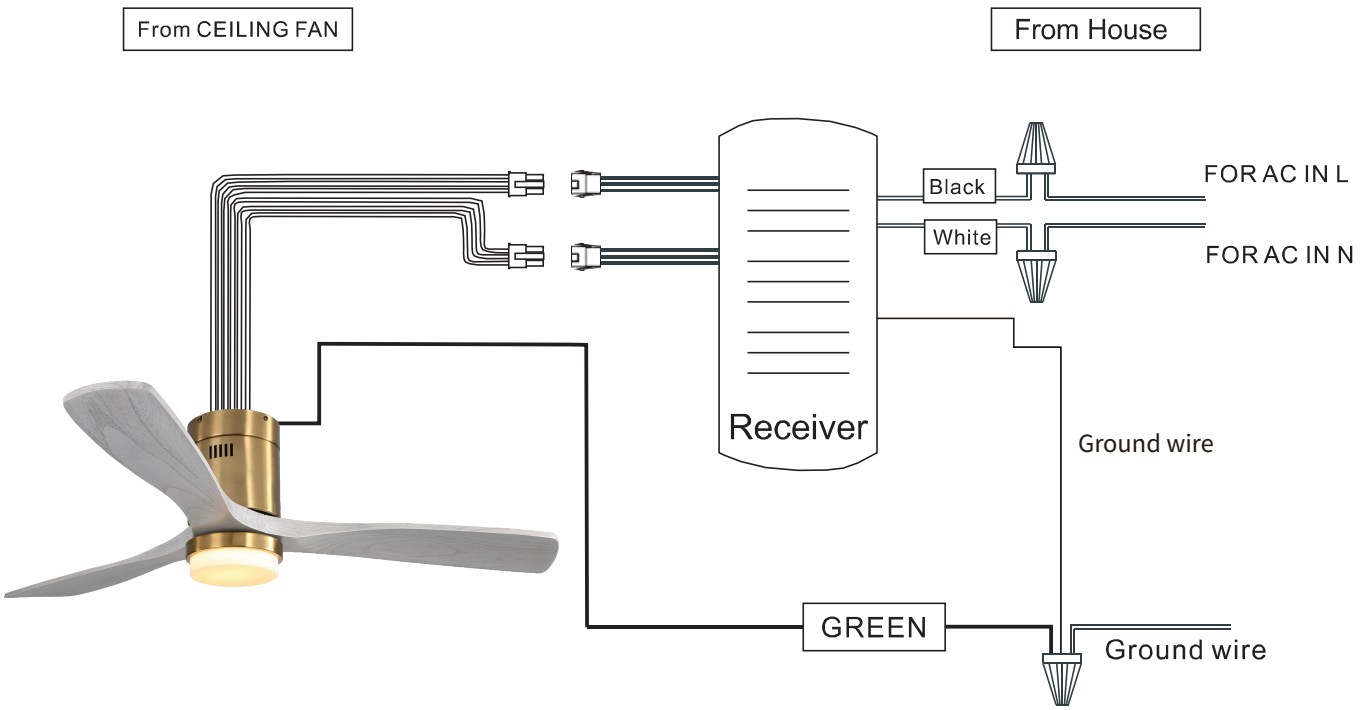

07 Remote control manual

USER MANUAL FOR REMOTE CONTROL TRANSMITTER

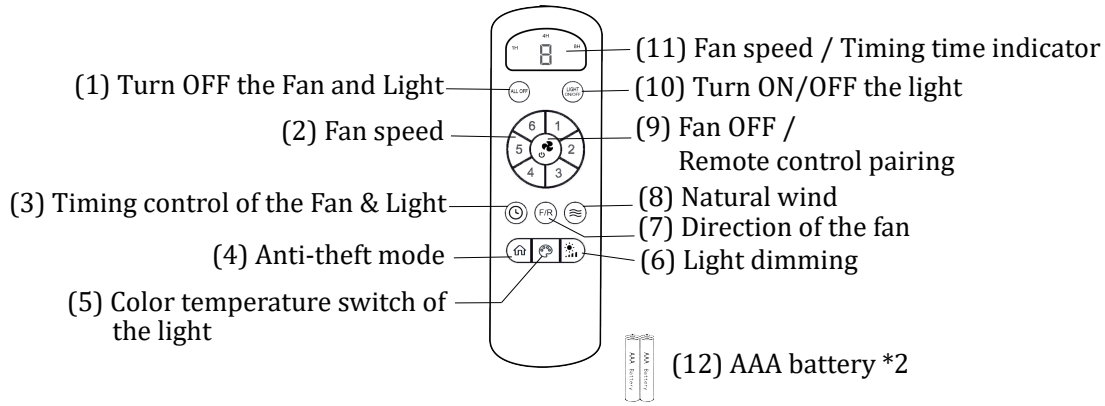

(1) Turn OFF the Fan and Light
Trun OFF the Fan and Light together.

(2) Fan speed
Press the key 1-6 to start the fan.

(3) Timing control of the Fan and Light
- Press the key to set up the timer at 1hour ,4 hours or 8 hours to set up fan and lamp timer. At the end of the timing, the fan and lamp will be automatically turned off.
- When the timing function is in effect, you can operate all the functions of the ceiling fan, and then press any timing button to recalculate the timing time.
- Timer setting cancellation : When timing function is working, press key(1) to cancel the timing function.

(4) Anti-theft mode
Press the key to turn on or turn off Anit-theft mode:
Every three hours, the light will automatically turn on and go out after 30 minutes. Press the key again to cancel.

(5) Color temperature Switch of the light
Press the key to change LED light color : white-yellow-warm (circulate).

(6) Light dimming
When the light is on, press and hold the key, the light gradually brightened - gradually dimmed(circulate).

(7) Direction of the fan
Press the key to change direction of the fan.

(8) Natural wind
Press the key, the fan speed automatic change between 1 to 6 speed.

(9) Fan OFF / Remote control pairing
- Turn OFF the fan.
- **Remote control pairing** : when AC power on, press and hold the key for 3-5 seconds, then finish the remote control pairing.

Notice：
The remote controller only needs to be paired once. After the paired product, the controller will have memory. The products have been paired before leaving the factory. When the remote control is damaged or lost, it is necessary to implement remote control pairing before using a new remote control.

(10) Turn ON/OFF the Light

(11) Fan speed and Timing time indicator
The indicator light will light up when press any key of the remote control

(12) AAA battery * 2
- Please install 2 pieces of AAA batteries before use.
- Please remove the battery when it is not used for a long time.

Note: the remote control must match the same code receiver

When the reversible button is pressed, the fan slowly slows down to a stop and then begins to reverse.

08 Match code

if it does not work

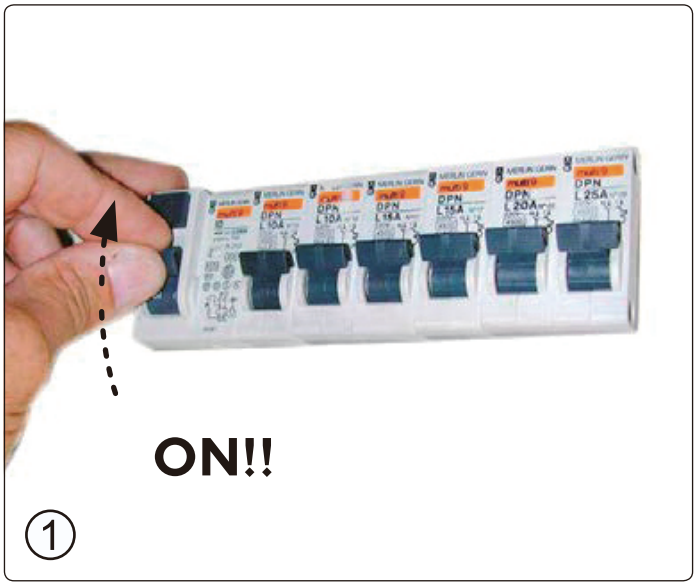

1.Turn on the main switch.



2.Pressing and holding this key for 5 seconds.

09 Adjusting and balancing your ceiling fan blades

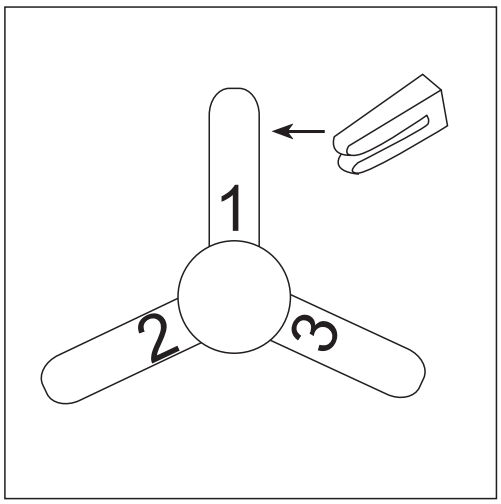

Slide the balancing clip on the trailing edge of any blade, halfway between the holder and tip. Run the fan to check the wobble. If the wobble persists, repeat with each blade, noting which one most reduced the wobble.

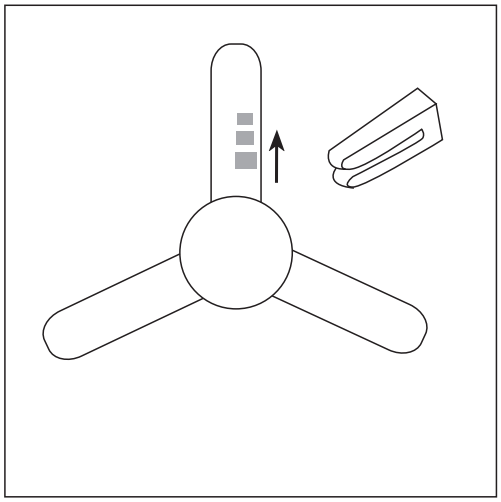

Slide the clip in small increments away from the center of that blade. Move the clip, operate the fan, then move it again until you eliminate as much wobble as possible.

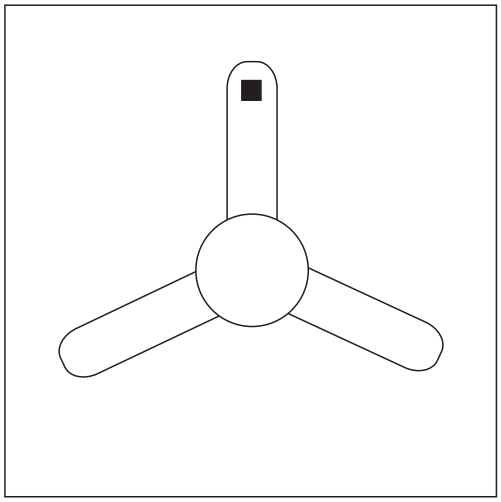

Stick the adhesive-backed balancing weight on the top center of the blade directly in line with the balancing clip.Add more weight if needed to get a smooth-running fan.

13 Care and Cleaning

WARNING: Make sure the power is off before cleaning your fan.

□ Because of the fan's natural movement, some connections may become loose. Check the support connections, brackets, and blade attachments twice a year. Make sure they are secure. It is not necessary to remove the fan from the ceiling.

□ Clean your fan periodically to help maintain its new appearance over the years. Do not use water when cleaning, as this could damage the motor, or the wood, or possibly cause an electrical shock. Use only a soft brush or lint-free cloth to avoid scratching the finish. The plating is sealed with a lacquer to minimize discoloration or tarnishing.

□ You can apply a light coat of furniture polish to the wood for additional protection and enhanced beauty. Cover small scratches with a light application of shoe polish.

□ You do not need to oil your fan. The motor has permanently-lubricated sealed ball bearings.

14 Trouble shooting

Problem	Solution
The fan will not start.	☐ Check the main and branch circuit fuses or breakers. ☐ Check the line wire connections to the fan and switch wire connections in the switch housing.
The fan is noisy.	☐ Ensure all motor housing screws are snug. ☐ Ensure the screws that attach the fan blade bracket to the motor hub are tight. ☐ Ensure the wire nut connetions are not ratting against each other or the interior wall of the switch housing. ☐ Allow a 24−hour "breaking in" period. Most noises associated with a new fan disappear during this time. ☐ If you are using the Ceiling Fan light kit,ensure the screws securing the glassware are tight.Check that the light ☐ bulbs are also secure. ☐ Ensure the canopy is a short distance from the ceiling.It should not touch the ceiling. ☐ Ensure your outlet box is secure and rubber isolator pads wereused between the mounting plate and outlet box.
The fan wobbles.	☐ Please check and follow the instructions: Chapitre No.12 Fan balance on page 13.

If you have any questions, please contact us. We will help you solve any problem.

Email:sofucor_service@163.com

Email:sofucorceilingfan@163.com

www.sofucorfan.com

Installation video
52144-N



Register for Extended
2 Years Warranty+2 Year Warranty

Within the First 7 days
Scan QR code with your phone