88 9200 002C
Kitchen Cart

IMPORTANT NOTE

Carefully remove all the parts from the carton and put them individually on a soft cloth to prevent scratches or other damages occuring to the parts.

We have taken great care in the design of this product and request that you carefully and strictly follow our assembly instructions to ensure a completed product as it was designed.

PART LIST

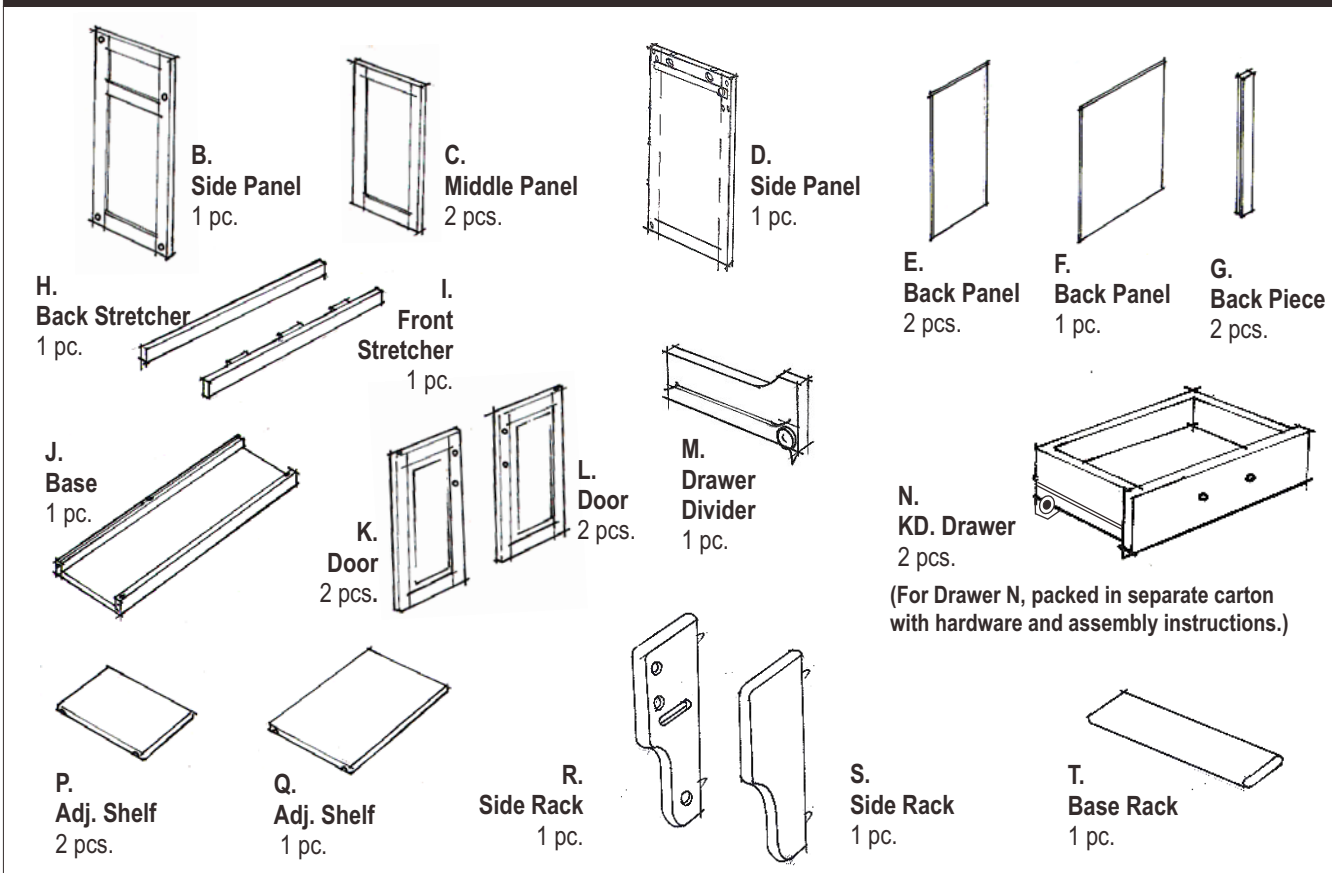

HARDWARE LIST

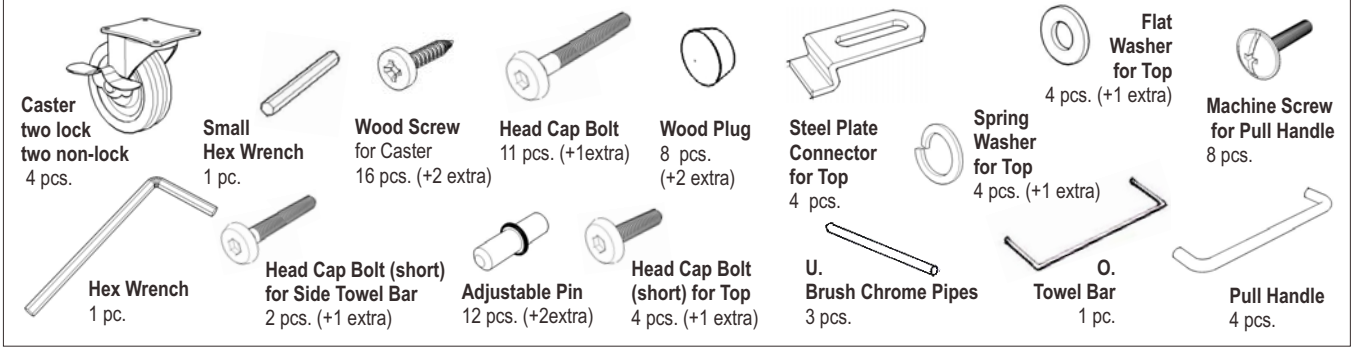

Tools required for assembly : ***Phillips*** screwdriver

Home Styles Consumer Assistance Line 888-680-7460 and 877-831-0319

servicedesk@homestyles-furniture.com

Revised date : **30Oct2012**

IMPORTANT
Do not tighten up all the screws until each part is properly assembled. You should keep Hex Wrench in the safe place as you may need to tighten up the Head Cap Bolts in the future.

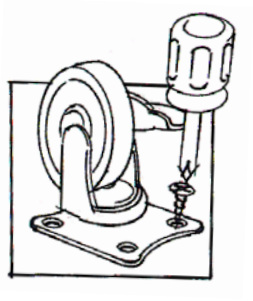

STEP 1

Attach four Casters to the Base (J) with Wood Screws.

(See the 'Arrow' sticker indicating front area on the base.)

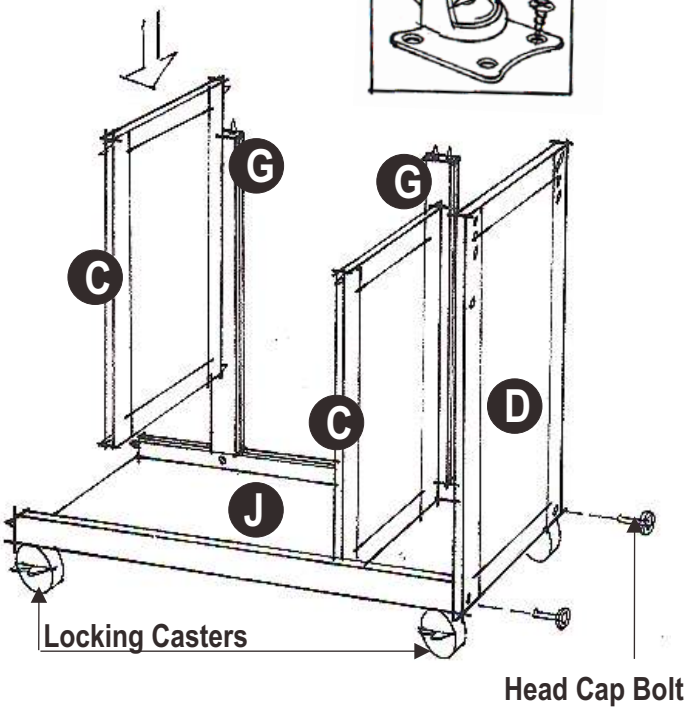

STEP 2

Attach the Side Panel (D) to the Base (J).

Tighten Head Cap Bolt only half way.

Attach the Back Piece (G) to the Base and the Middle Panel (C) to the Back Piece (G).

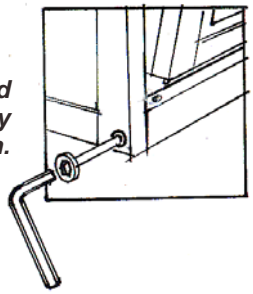

Tighten Head Cap Bolt by Hex Wrench.

STEP 3

Slide the Back Panel (E) and (F) in places.

Attach the Back Stretcher (H) and Front Stretcher (I) to the unit with Head Cap Bolts through the Side Panel (D).

Tighten Head Cap Bolts half way.

Attach the Drawer Divider (M) in between the Back Stretcher (H) and Front Stretcher (I), using Head Cap Bolt.

Attach the Side Panel (B) to the unit, using Head Cap Bolts.

Tighten up all Head Cap Bolts.

Attach the Towel Bar (O) to the Side Panel (D), using Head Cap Bolts (short).

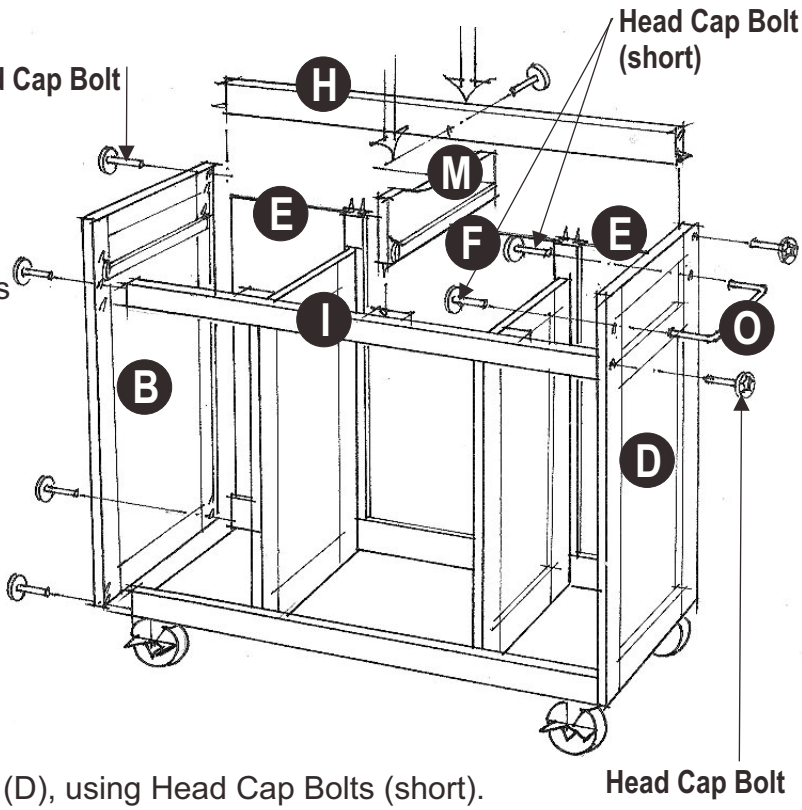

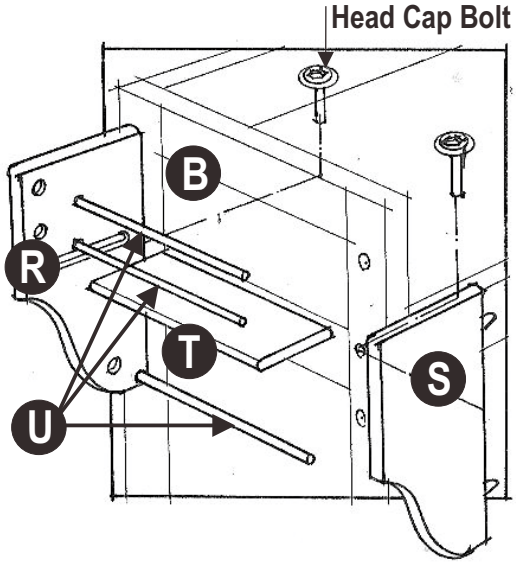

STEP 4

Attach the Side Rack (R) to the Side Panel (B) with the Head Cap Bolt.

Attach the Brush Chrome Pipes (U) to the pre-drilled holes of Side Rack (R).

Attach the Base Rack (T) to the Side Rack (R).

Attach the Side Rack (S) to the Side Panel (B), using Head Cap Bolt.

STEP 5

Install the Doors (K) and (L), using Spring Pin Hinge.
(See figure 1)

Assemble the Door Pull Handles, using the Machine Screws.
(See Figure 2)

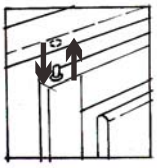

(Figure 1)

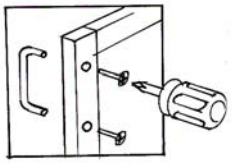

(Figure 2)

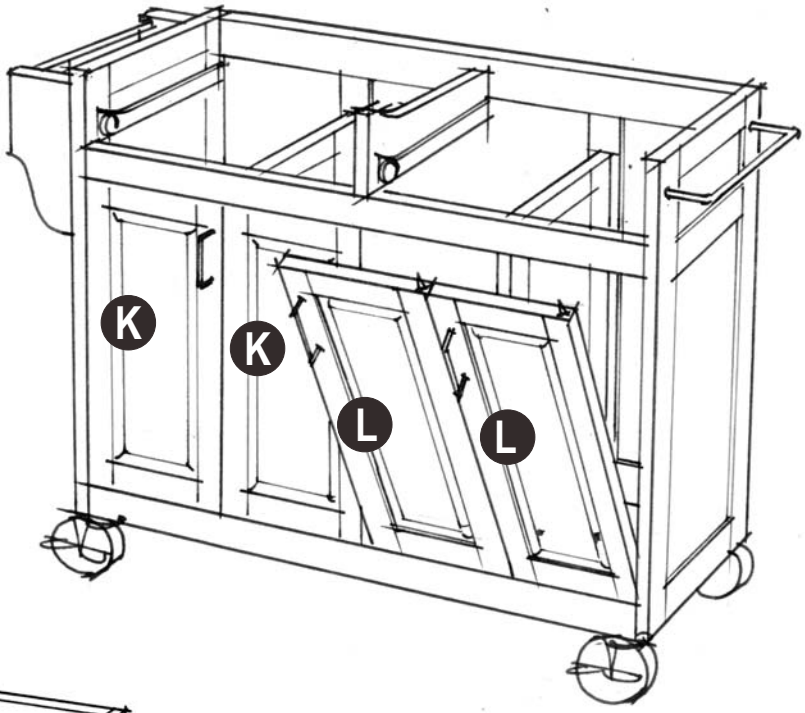

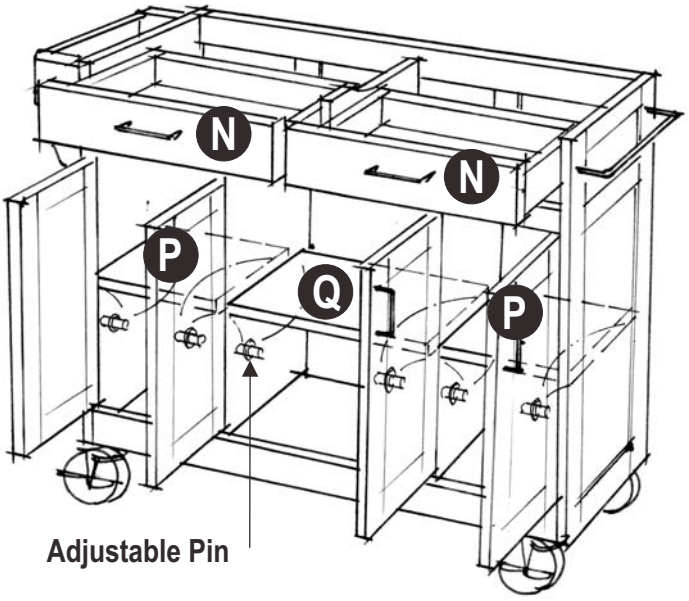

STEP 6

Put the Adjustable Pins into the side panels at the desired level. Place Shelf (P),(Q). Slide the Drawer (N) into places.

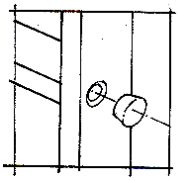

STEP 7

Cover up all holes with Wood Plugs

*** ***See the process in assembling the top in separate sheet.***

Drawer (N)

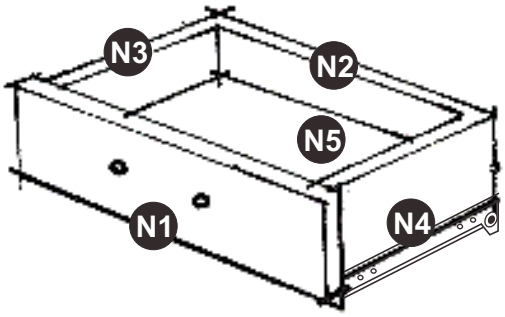

UNIT PART LIST

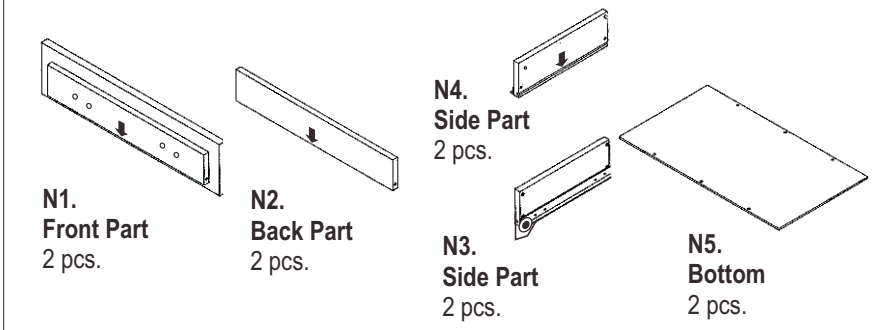

HARDWARE LIST

Assembly Instructions

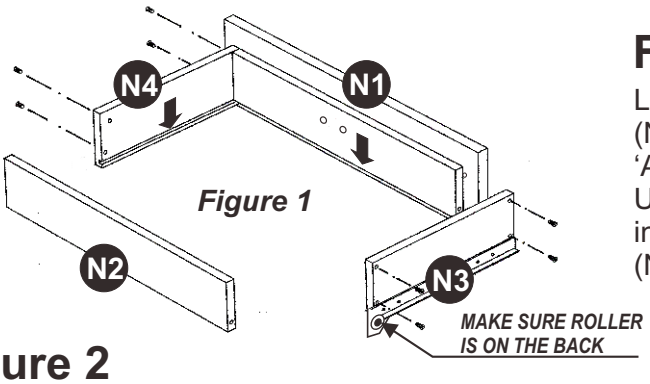

Figure 1

Figure 1

Line up Side Parts (N3) and (N4) to the Front Part (N1) and Back Part (N2). Be sure to follow the 'Arrow' sign sticker on the parts.
Using a **Phillip's** screw driver, insert 1" screws into each of the 4 pre-drilled holes on Side Parts (N3) and (N4), then tighten half way.

Figure 2

Turn the assembled drawer over and slide the Plywood Bottom Part (N5) into the grooves on Side Parts (N3) and (N4). Be sure to push the plywood all the way forward so it meets the Front Part (N1).

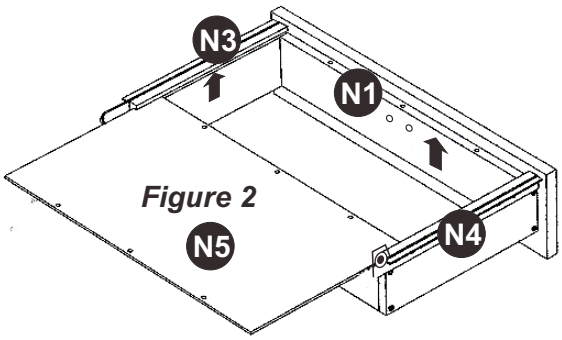

Figure 2

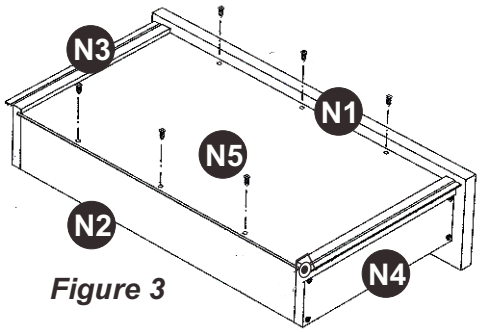

Figure 3

Figure 3

Insert the remaining (6) 1/2" screws into the pre-drilled holes on Bottom Part (N5), then tighten all screws

* If you are missing any of these parts, please contact our DMI Customer Service Department at 1-877-831-0319 or fax us at 1-800-755-2878.

Figure 4

Assemble the Pull Handle with Machine Screw on the Front Part (N1).

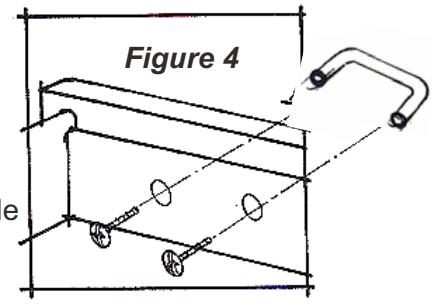

Figure 4

PART LIST

W.
Top
1 pcs.

Attention !
This Top can be used for both kitchen cart 9100 series and 9200 series.

HARDWARE LIST

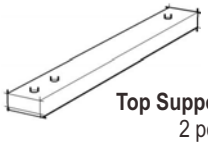

X.
Top Support
2 pcs.

Head Cap Bolt
6 pcs. (+1 extra)

The Top Support (part X) and Head Cap Bolts are particular parts required for 9100 series only, they are not necessary for 9200 series.

9200 Top Assembly Instructions

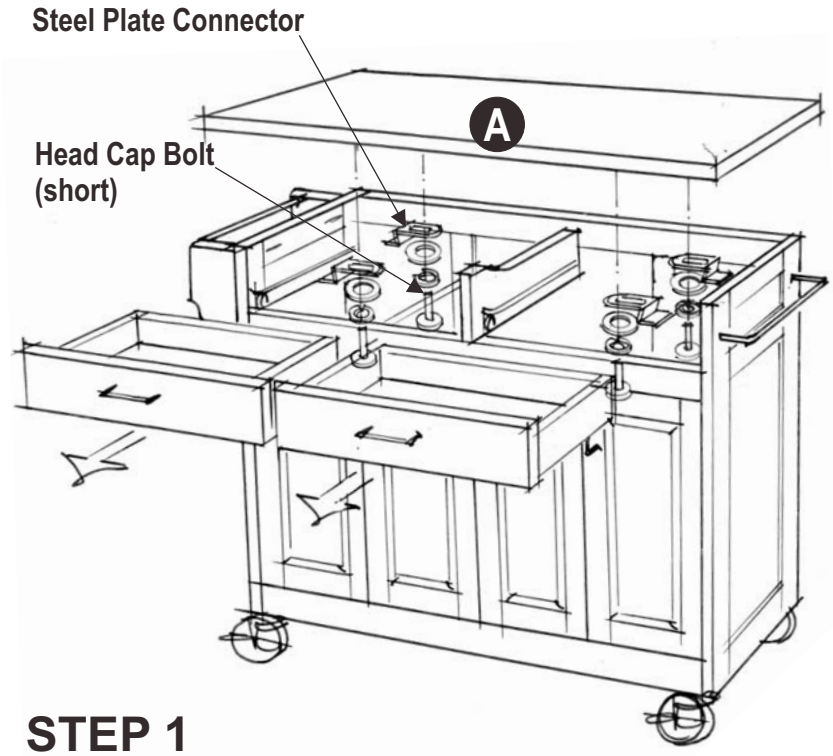

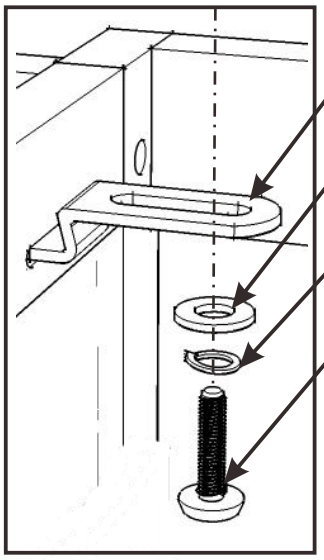

(Figure 1)

STEP 1

Now, you'll be able to create your own kitchen cart. Make your own choice of the 'Top', wood or stainless steel or granite.

Remove Drawers from the unit.

Place the selected 'Top' on the unit, attach it to the body with the Steel Plate Connectors, Flat Washers, Spring Washers and Head Cap Bolts. (See figure 1)

Slide the Drawers into place.

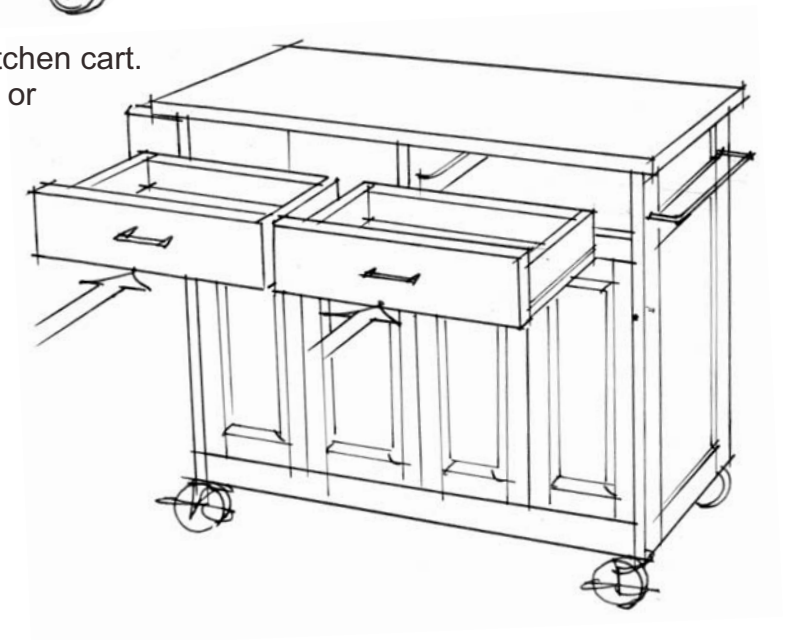

88 9100 103C
Granite Top

9100 Series
Top Assembly Instructions

IMPORTANT NOTE

Carefully remove all the parts from the carton and put them individually on a soft cloth to prevent scratches or other damages occurring to the wood parts.

We have taken great care in the design of this product and request that you carefully and strictly follow our assembly instructions to ensure a completed product as it was designed.

Part List

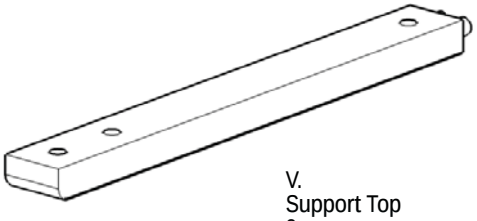

V.
Support Top
2 pcs.

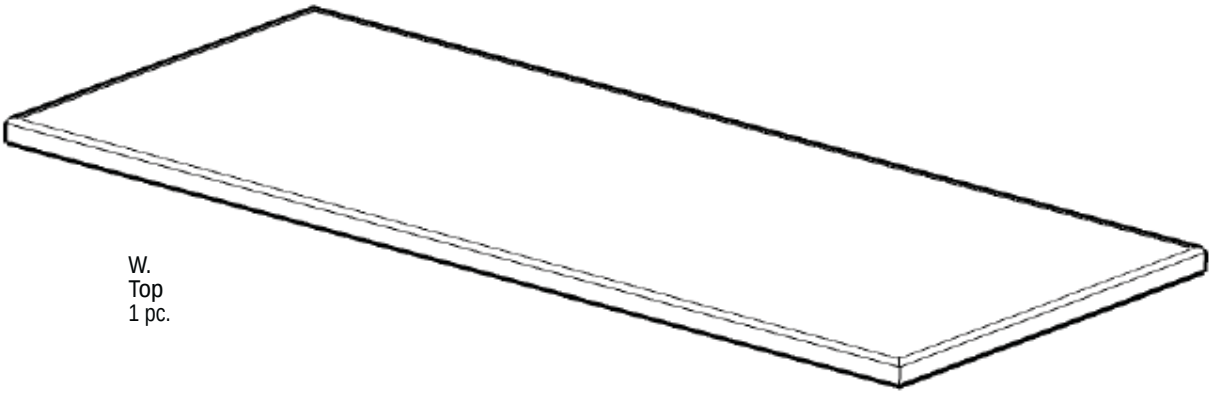

W.
Top
1 pc.

Hardware List

M6x30
Head Cap Bolt
6 pcs. (+1 extra)

Home Styles Consumer Assistance: www.homestyles-furniture.com,
servicedesk@homestyles-furniture.com, 888-680-7460, 877-831-0319

9100 Series Top Assembly Instructions

STEP 1

Put back end of Top Supports (V) into the pre-drilled holes in unit and attach with Head Cap Bolts.

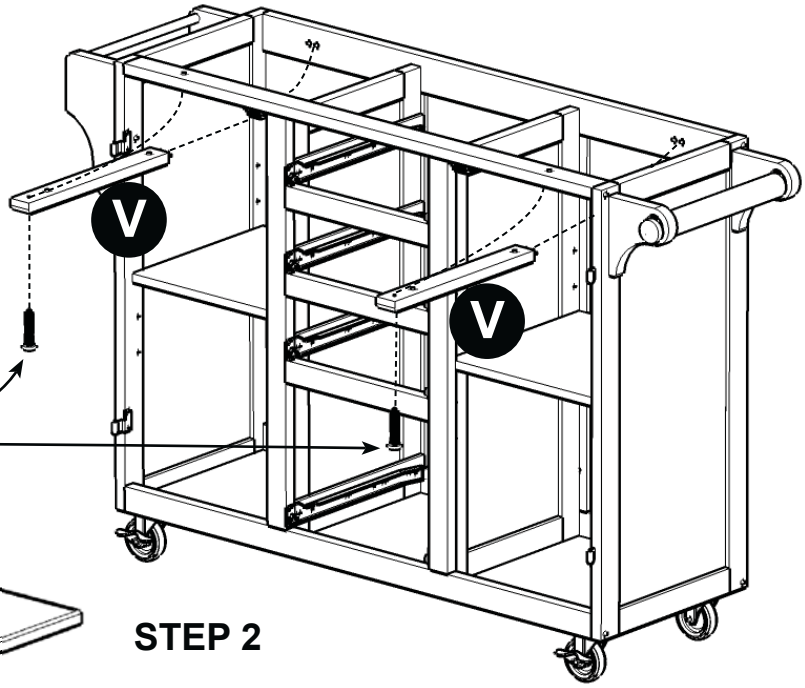

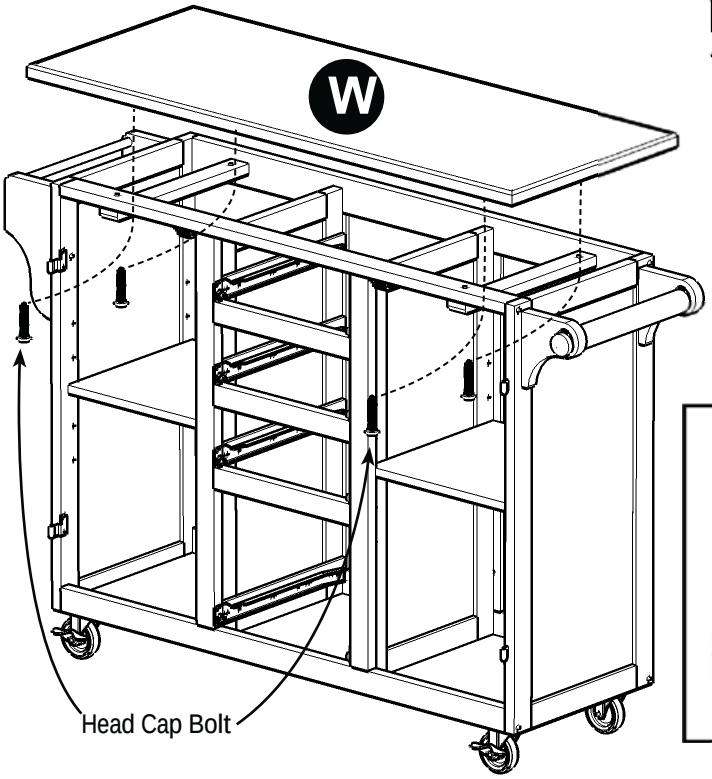

STEP 2

Place Top (W) onto the unit and then tighten all Head Cap Bolts.

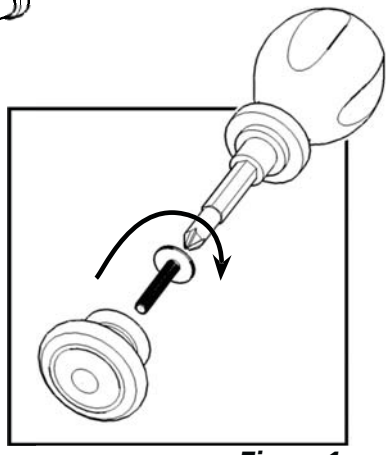

Figure 1

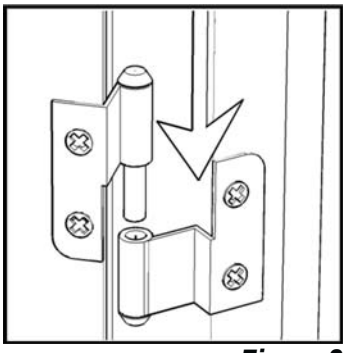

Figure 2

STEP 3

Attach Pull Handles to Doors (N) and (O) using Machine Screws. (See Figure 1)

Attach Doors (N) and (O) by sliding door lift hinges into the side panel lift hinges.(See Figure 2)

Slide Drawers (T) and (U) into place.

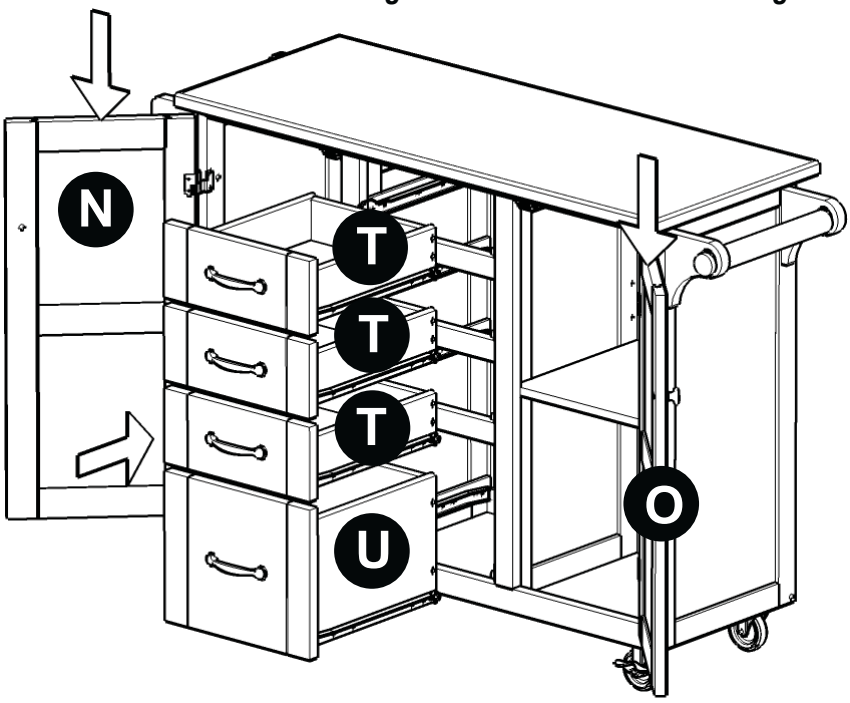

88 9100 103C

Granite Top

9200 Series
Top Assembly Instructions

IMPORTANT NOTE

Carefully remove all the parts from the carton and put them individually on a soft cloth to prevent scratches or other damages occuring to the parts.

We have taken great care in the design of this product and request that you carefully and strictly follow our assembly instructions to ensure a completed product as it was designed.

Part List

W.
Top
1 Pc.

Home Styles Consumer Assistance: *www.homestyles-furniture.com, servicedesk@homestyles-furniture.com, 888-680-7460, 877-831-0319*

9200 Series Top Assembly Instructions

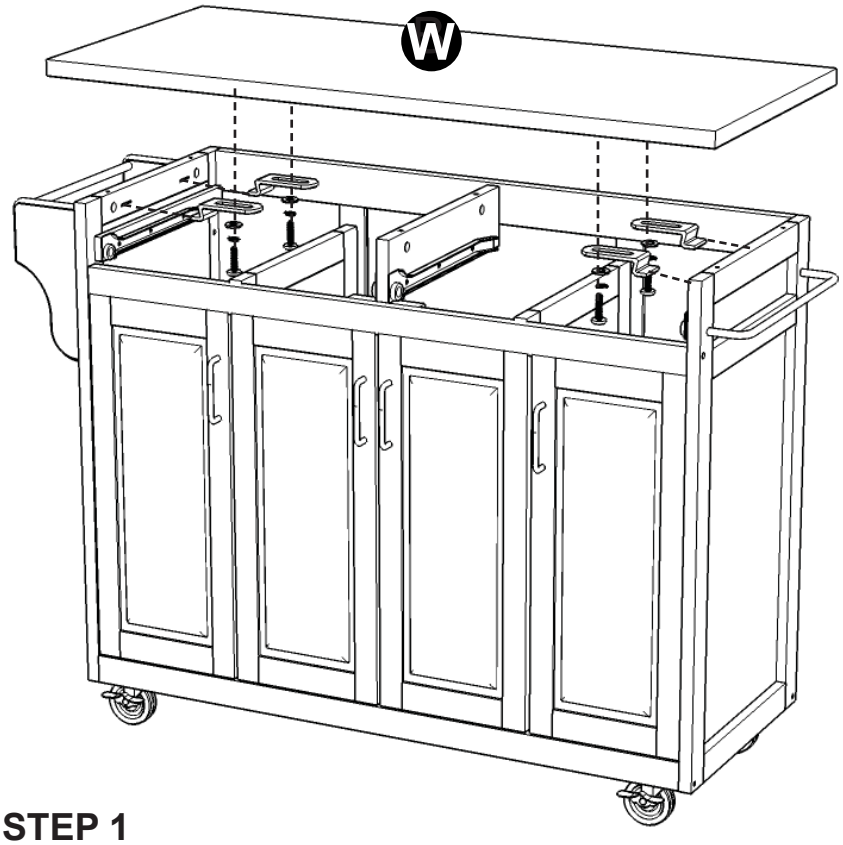

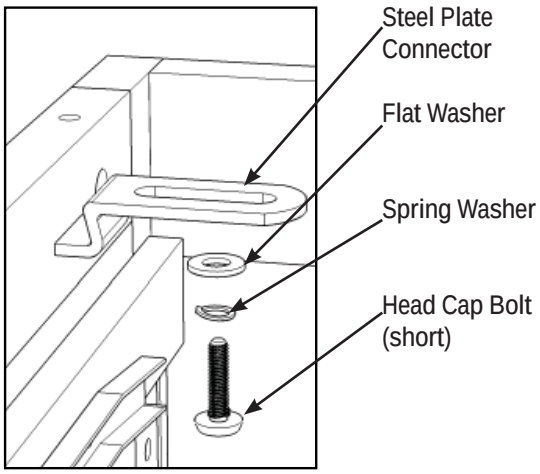

Figure 1

STEP 1

Remove the drawers from the unit.

Place Top (W) onto the unit and attach it to the body with the Steel Plate Connectors, Flat Washers, Spring Washers and Head Cap Bolts (short). (See Figure 1)
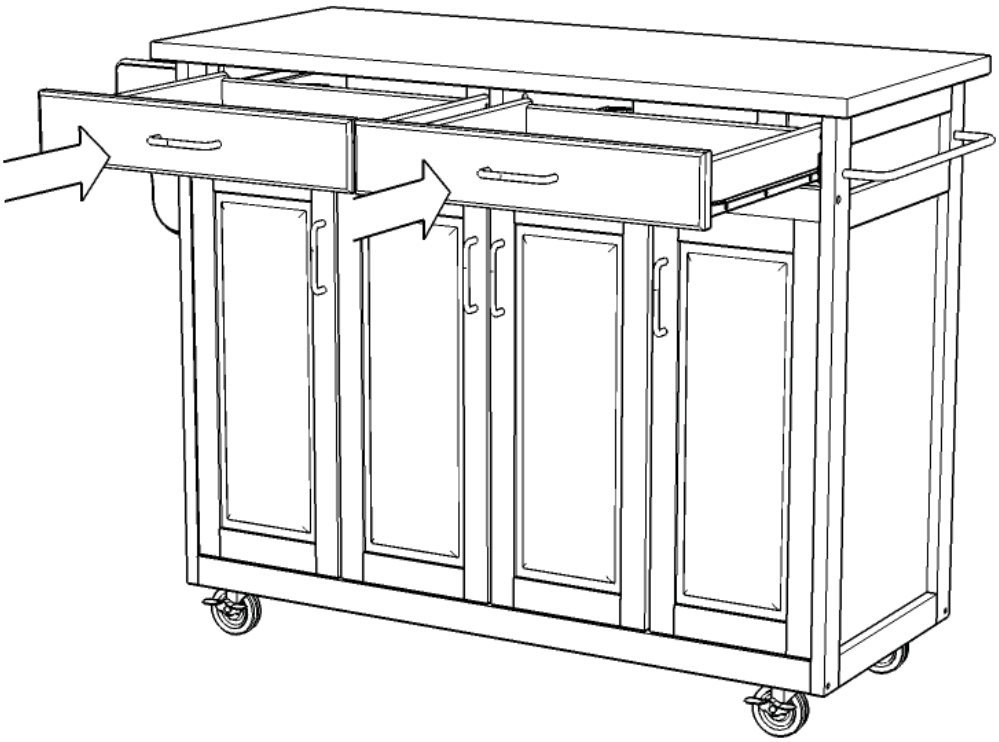
Slide the drawers into place.