GLACIER BAY®

USE AND CARE GUIDE

APRON FRONT STAINLESS STEEL KITCHEN SINK

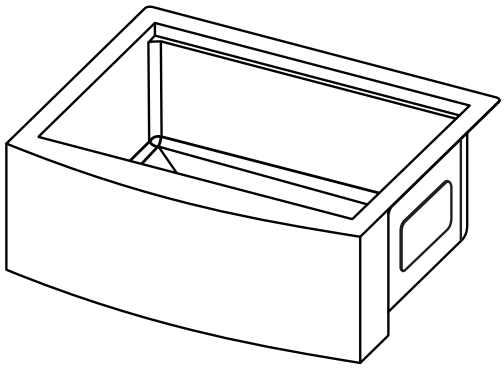

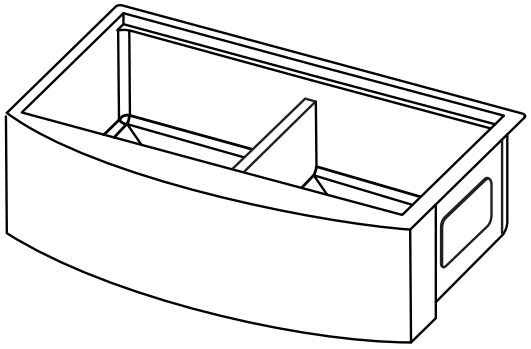

Model#ACS3322A2Q-WB
Model#ACS3322A1Q-FWB
Model#ACS3322A2Q-FWB

Questions, problems, missing parts? Before returning to the store,
call Glacier Bay Customer Service
8 a.m. – 7 p.m., EST, Monday-Friday, 9 a.m. – 6 p.m., EST, Saturday

1-855-HD-GLACIER

HOMEDEPOT.COM/GLACIERBAY

THANK YOU

We appreciate the trust and confidence you have placed in Glacier Bay through the purchase of this kitchen sink. We strive to continually create quality products designed to enhance your home. Visit us online to see our full line of products available for your home improvement needs. Thank you for choosing Glacier Bay!

Pre-Installation

PLANNING INSTALLATION

Compare all the parts to the Hardware Included and Package Contents lists and verify that all the parts are included. Inspect all the parts for damage. If there are missing parts or visible damage to the sink, do not install and contact the Customer Service Team at 1-855-HD-GLACIER.

TOOLS REQUIRED

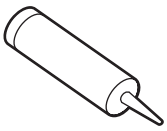

Silicone sealant



Safety goggles



Phillips screwdriver

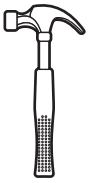

Hammer

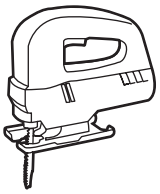

Jigsaw



Drill and drill bit



Plumber's putty

HARDWARE INCLUDED

NOTE: Hardware is not shown to actual size.

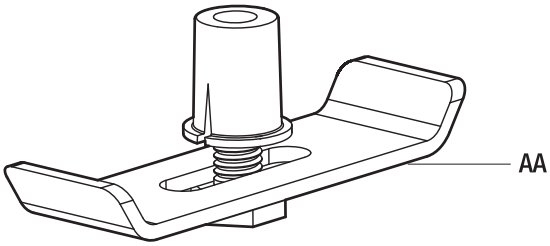

Part	Description	Quantity
AA	Mounting clip	10

Undermount-Installation

1 Preparing the cabinet

NOTICE: It is strongly suggested that you contact a professional countertop fabricator when installing the sink as an undermount.

NOTICE: The cabinet must be installed, secured, plumber, and level before installing the sink.

NOTICE: It is recommend to provide the cabinet maker with the actual sink prior to cabinet fabrication. Before installing the sink, verify that the distance from the top of the doors to the top of the cabinet is greater than the apron front.

NOTICE: Double check the measurement of the cabinet cutout and make any necessary adjustments by either adding filler strips or sanding the opening.

NOTICE: A custom sink base cabinet and support framing is required for proper installation.

- ☐ Construct a support frame to fit inside the cabinet opening. Provide the appropriate clearance for the faucet, the water supply lines, the drain assembly, the garbage disposal and the structural parts of the cabinet.
- ☐ Apply painter's tape to the cabinets for marking and cutting purposes. This will protect the cabinet from damage while cutting.
- ☐ Outline the cutout on the front of the cabinet according to the actual sink.
- ☐ Using a sharp saw blade, carefully cut the cabinet on the traced line.

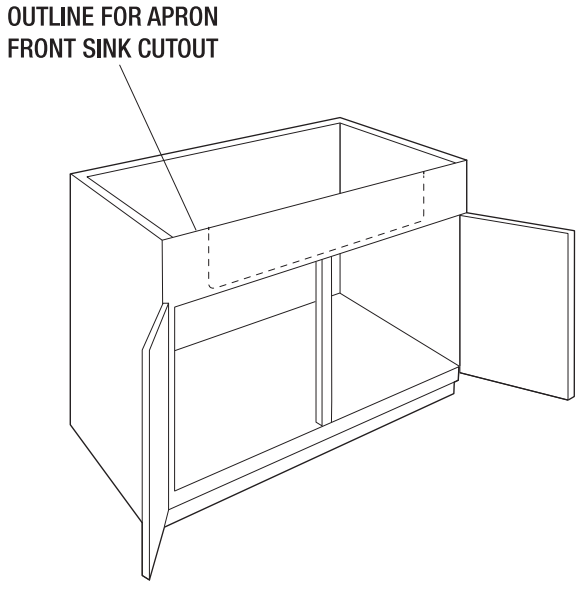

2 Preparing the countertop

- ☐ Measure the sink apron and the cabinet opening to make sure the sink apron will fit into the cabinet opening. If necessary, sand the opening or add wood filler strips.
- ☐ Prepare the cabinet and create a support frame inside the cabinet that the sink will sit on. Use 2x4 solid wood studs to create the support frame. Your cabinet and support frame should be strong enough to hold up to 200 lbs of weight once installed. The support frame should be positioned so that the top of the sink rim is level and flush with the top surface of the cabinet perimeter. Make sure the support frame leaves room for the drains, the faucet water lines, and the garbage disposal (if any).
- ☐ Place a thin layer of sealant on the supporting frame where it will contact the sink.
- ☐ Due to the various cutout sizes possible (based on your preference) a cut-out template is not provided. Use the actual sink measurement to determine the actual location of the cutout. Ensure adequate clearance behind the sink for any faucet and backsplash.
- ☐ Trace the cut-out opening on the countertop. Cut out the opening in the countertop. Use an orbital sander or sanding block to smooth the edge of the cut-out area and remove all the saw marks. For laminate type countertops, all the exposed unlaminated surfaces near the cut-out opening must be adequately finished and sealed to prevent water damage.

3 Install wood supports (Not included)

- ☐ Cut two lengths of support framing to extend along the inside walls on each side of the base cabinet.
- ☐ Measure and mark the support mounting locations; ensuring the sink rim will sit at, or slightly below the top edge of the cabinet.
- ☐ Position and level the supports.
- ☐ Secure the supports with construction adhesive and screws (not provided).
- ☐ Cut four lengths of support framing to extend from the bottom of the installed supports to the floor of the cabinet.
- ☐ Secure the vertical supports with construction adhesive and screws (not provided).

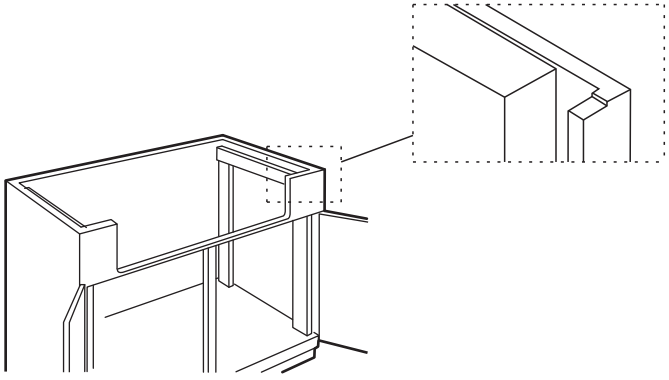

Undermount-Installation

4 Installing the sink

NOTICE: The front sink apron must be secured to the front of the cabinet by attaching fasteners through the cabinet front and into the support framing. Failure of the step can lead to product damage.

NOTICE: The manufacturer is not responsible for the sink or the countertop if damaged during installation. Be sure to inspect the sink for damage prior to beginning installation.

NOTICE: Metal edges may be sharp - use caution when handling.

- ☐ Clean the sink apron and top rim of all debris. Ensure that the surface on the underside of the countertop cutout opening is smooth and free of debris.
- ☐ Lower the sink (A) onto the supports and verify the sink is supported by the frame.
- ☐ Push the sink in to ensure the apron is flush to the front of the cabinet.
- ☐ Verify the sink is level. Make any adjustments and shim as needed.

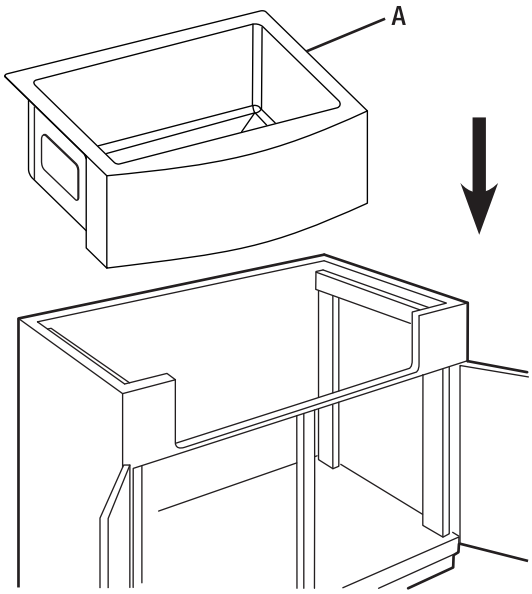

5 Installing the countertop

- ☐ Clean the bottom of the countertop and the top flange (or lip) of the sink with denatured alcohol.
- ☐ Apply a narrow bead of silicone adhesive sealant (not included) around the side and back of the sink (A).
- ☐ Carefully position and secure the sink to the countertop following the manufacturer's instructions.
- ☐ Apply a thin bead of silicone sealant (not included) where the sink meets the countertop and cabinet.
- ☐ Immediately remove excess sealant.

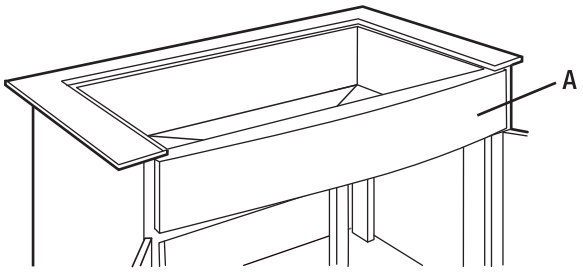

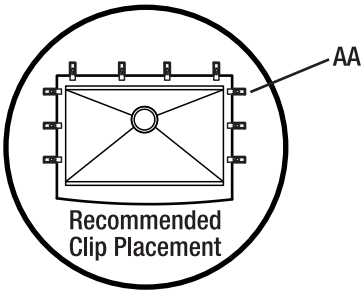

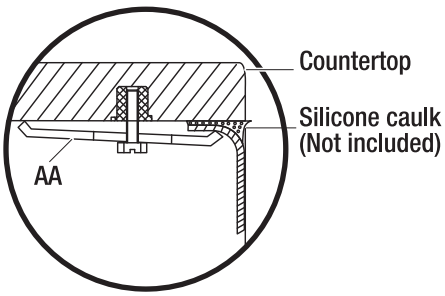

Undermount-Installation

6 Installing the drain assembly

- ☐ Place the sink (A) into the installation hole to verify the fit. Adjust the cutout if necessary.
- ☐ Install the strainer assembly (C-J) as these steps describe. It is easier to install the strainer assembly (C-J) to the sink (A) before the sink is installed to the cabinet.
  1) Apply a small amount of plumber's putty (not included) in the notch around the drain hole of the sink (A). Place the strainer ring (E) on top of the drain hole in the sink (A).
  2) Put strainer basket (C) into the strainer bowl (D) and place this assembly into the drain hole in the sink (A).
  3) From underneath the sink (A), place the paper washer (F), rubber washer (G), locknut (H), plastic joint (I), and connecting nut (J) under the drain hole in the sink (A).
  4) Tighten the locknut (H) to hold the strainer assembly securely in place.

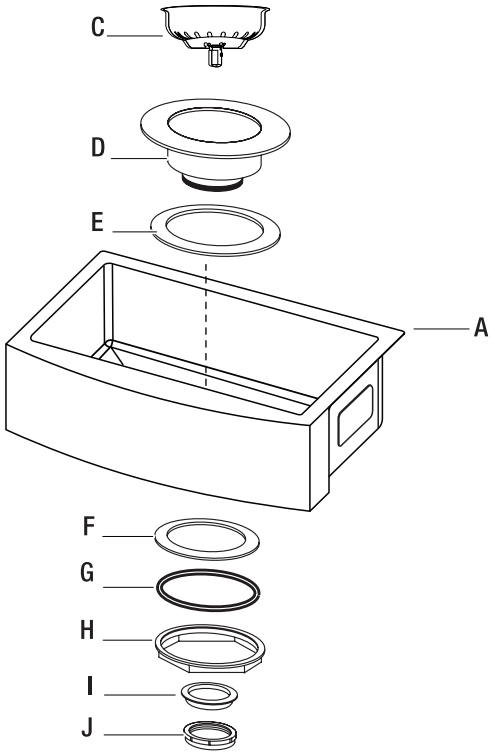

7 Putting on the grid

- ☐ Place the bottom grid (K) into the sink (A).
- ☐ If you have a double bowl sink, install the assembly and put on the grid in the same way for the second bowl.

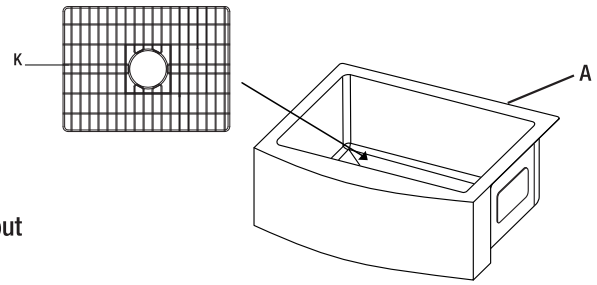

8 Putting on the accessories (workstation sinks only)

- ☐ For workstation sinks (A), place the cutting board (N), the colander (M) and the roll mat (L) on the sink (A) or countertop directly.

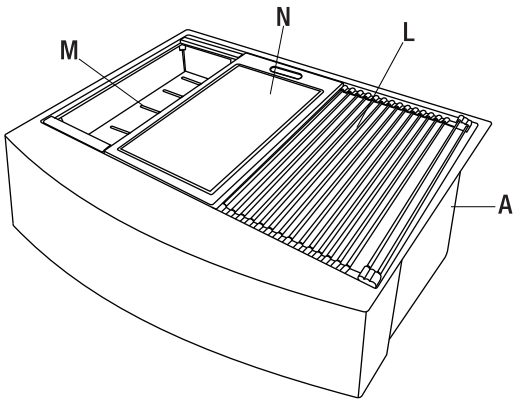

GLACIER BAY®

Questions, problems, missing parts? Before returning to the store,
call Glacier Bay Customer Service
8 a.m. – 7 p.m., EST, Monday-Friday, 9 a.m. – 6 p.m., EST, Saturday

1-855-HD-GLACIER

HOMEDEPOT.COM/GLACIERBAY

Retain this manual for future use.