REV	BY	DATE	DESCRIPTION

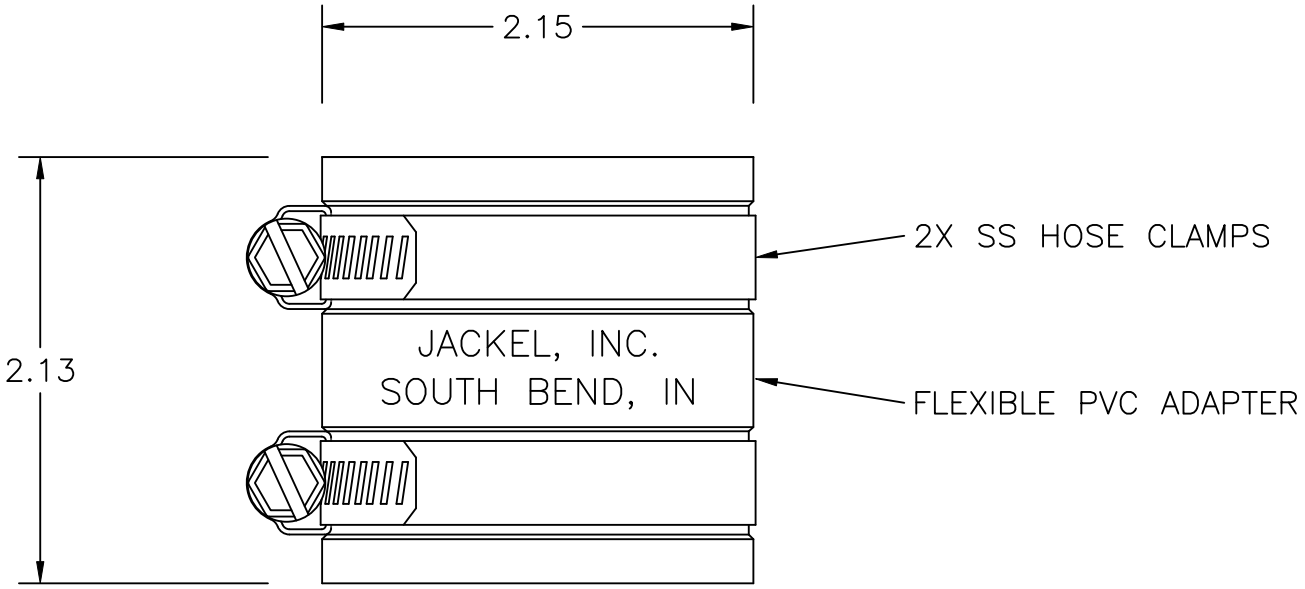

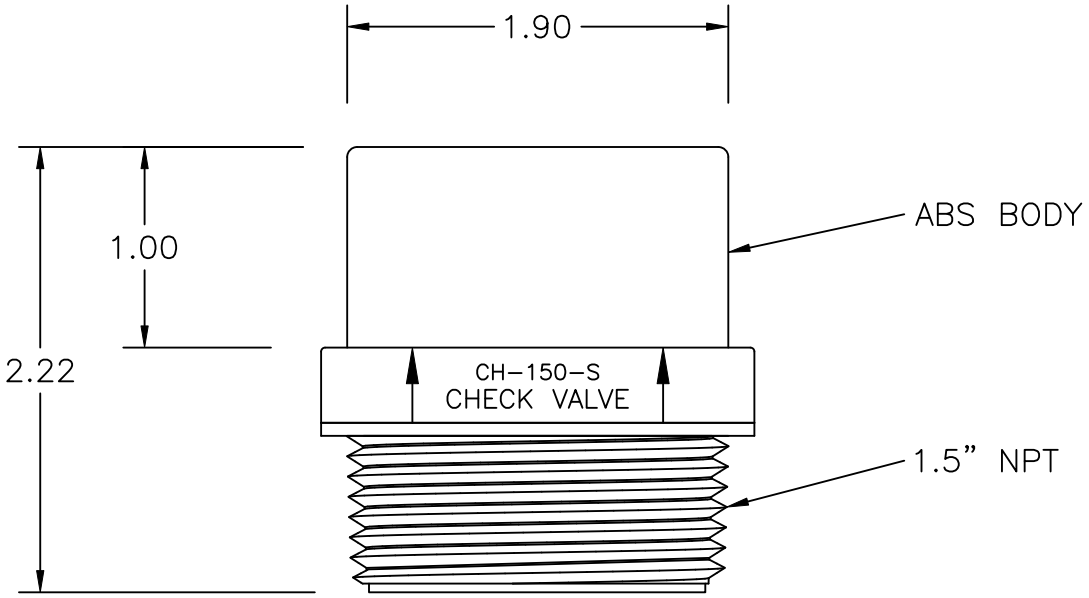

NOTES:
1. FOR USE WITH 1.5" INCH SCH40 OR SCH80, PVC OR ABS PIPE.

JACKEL, INC.
15314 HARRISON RD., MISHAWAKA, IN 46544
ph 574.256.5635, fax 574.256.6966, www.jackelinc.com

PART NAME: 1.5 IN. NPT THREADED SUMP PUMP CHECK VALVE					
PART NUMBER: CH-150S-150MT					
MATERIAL: VARIOUS			FINISH: BLACK, AS MOLDED		
	UNITS: INCHES	SCALE: NTS	WEIGHT	SHEET 1 OF 1	REVISION
APPROVED	CHECKED		DRAWN BY: S. JACKMAN	DATE: 6/12/19	

ALL INFORMATION CONTAINED IN THIS DOCUMENT IS CONFIDENTIAL AND PROPRIETARY TO JACKEL INC.