Specifications

Constructor 2-Handle Standard Kitchen Faucet

Internet#	MODEL	SKU #	FINISH
309237990	HD67099-0B01	1002974577	Chrome
324555867	HD67099-0B10H	1009352702	Matte Black

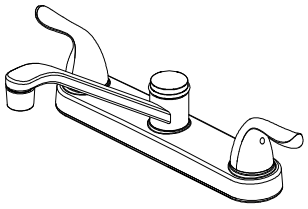

FEATURES

- Requires 3-Hole Sink with 8" On-Center
- 1/2" IPS Connections
- Max Flow Rate: 1.8 gpm (6.8 L/min) at 60 psi
- Max. Deck Thickness: 1 1/16"
- Spout Reach: 7 3/16"
- Spout Height: 5 13/16"
- 1/4 Turn Washerless for Lifetime Drip-Free Operation
- Exposed Aerator

CODE COMPLIANCE

- IAPMO Certified: ASME A112.18.1/CSA B125.1
- NSF 61 Section 9
- NSF 372
- Calgreen Certified
- Meets AB 1953 Lead Standard
- ADA Compliant

WARRANTY

- Limited Lifetime Warranty

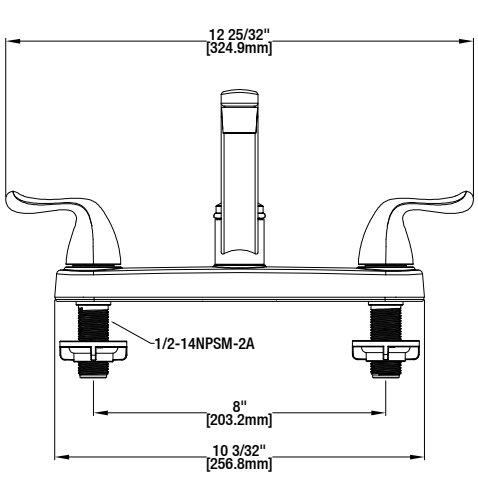

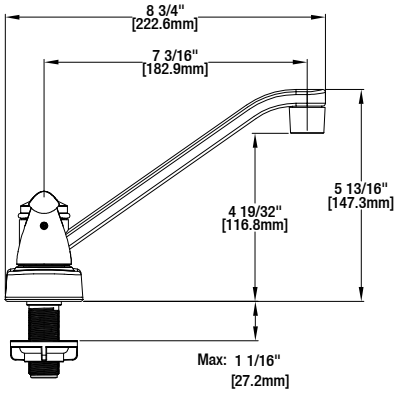

INSTALLATION DIMENSIONS

Glacier Bay reserves the right to make changes in specifications and materials and to change and discontinue models, both without notice or obligation. Dimensions are for reference only.