INSTRUCTION SHEET

Site Selection

Site selection is critical for safe generator operation. It is important to discuss these factors with the installer when selecting a site for generator installation:

- Carbon monoxide
- Fire prevention
- Fresh air for ventilation and cooling
- Water ingress prevention
- Proximity to utilities
- Suitable mounting surface
- Readily accessible for maintenance, repair, and first responders

The following pages describe each of these factors in detail.

NOTE: The term “structure” is used throughout this section to describe the home or building where generator is being installed. Illustrations depict a typical residential home. However, instructions and recommendations presented in this section apply to all structures regardless of type.

Carbon Monoxide



⚠DANGER

Asphyxiation. Running engines produce carbon monoxide, a colorless, odorless, poisonous gas. Carbon monoxide, if not avoided, will result in death or serious injury.

(D000103)

IMPORTANT NOTE: Move to fresh air immediately and seek medical attention if you feel sick, dizzy, or weak while the generator is running or after it stops.

Generator exhaust contains carbon monoxide (CO)—a poisonous, potentially lethal gas that cannot be seen or smelled. The generator must be installed in a well ventilated area away from windows, doors, and openings. The selected location should not allow exhaust gases to be drawn into structures where people or animals may be present.

Carbon Monoxide Detectors

See ***Figure 1***. CO detectors (K) should be installed and used to monitor for CO and to warn individuals about the presence of CO. The manufacturer recommends CO detectors be installed on each level of the structure adjacent to the generator, and tested in accordance with the CO detector manufacturer’s instructions and warnings. Install CO detectors to adequately warn the building’s occupants of the presence of CO. Contact local authority having jurisdiction (AHJ) for any applicable requirements concerning CO detectors. See NFPA 72, National Fire Alarm and Signaling Code, and Section R315 in the ICC International Residential Code for more information.

IMPORTANT NOTE: Common smoke alarms do NOT detect CO gas. Do not rely on smoke alarms to protect residents or animals from CO. The only way to detect CO is to have functioning CO detectors.

Potential CO Entry Points

See ***Figure 1***. Generator exhaust can enter a structure through large openings, such as windows and doors. However, exhaust and CO can also seep into the structure through smaller, less obvious openings.

IMPORTANT NOTE: The diagram provided represents general guidelines, and are not all inclusive. A unit placed in accordance within NFPA requirements, including the offset reduction validated through testing by SwRI, may still allow CO within the structure. Unit may need to be installed farther from the structure than the NFPA requirements.

IMPORTANT NOTE: If prevailing winds will cause blowing or drifting, consider using a windbreak at a safe distance from the generator to protect from CO entry.

Protect the Structure

See ***Figure 1***. Verify structure itself is correctly caulked and sealed to prevent air from leaking in or out. Voids, cracks, or openings around windows, doors, soffits, pipes, and vents can allow exhaust gas to be drawn into the structure.

Some examples of potential entry points are described and included in, but not limited to, the accompanying table.

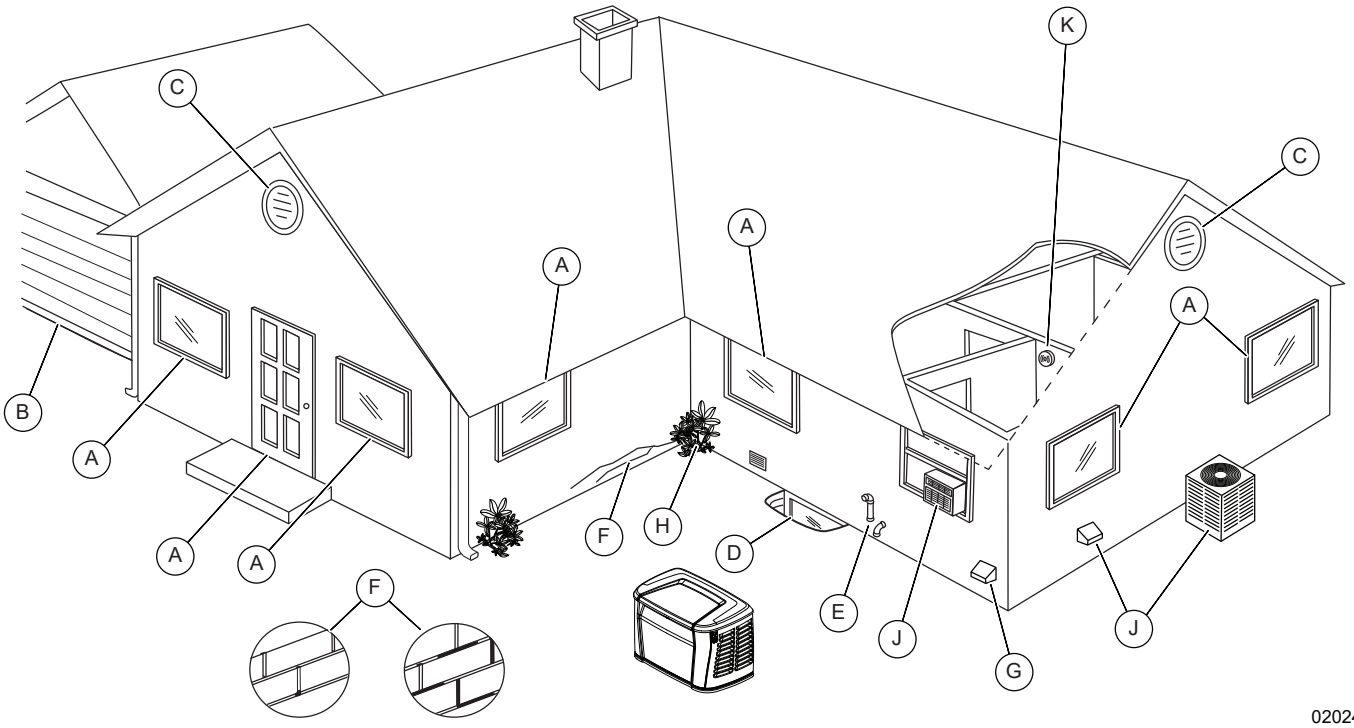

Figure 1. Carbon Monoxide—Potential Entry Points

ID	Entry Point	Description / Comments
A	Windows and doors	Architectural details which can be (or are) opened to admit fresh air into the structure, including inoperable windows or doors.
B	Garage door	CO can leak into garage if door is open, or does not seal correctly when closed.
C	Attic vent	Attic vents, ridge vents, and soffit vents can all admit generator exhaust.
D	Basement windows, crawl spaces	Windows, hatches, or crawl spaces allowing ventilation to or from lower level of a structure.
E	Furnace intake/exhaust vent	Air intake and exhaust pipes for furnace.
F	Wall cracks	Includes (but not limited to) cracks in wall, foundation, seepage holes in brick/mortar, degraded or damaged brick/mortar, or air gaps around doors, windows, and pipes. See ***Protect the Structure***.
G	Dryer vent	Exhaust duct for clothes dryer.
H	Airflow restrictions	Structural features, including but not limited to: corners, alcoves, fences, courtyards, and areas with heavy vegetation can restrict correct airflow around unit. Exhaust gases can be collected in these areas.
J	HVAC components	Do not direct generator discharge into HVAC components, including but not limited to: make up air systems, AC condensers (which may blow exhaust gas into structure openings), and window AC units. **IMPORTANT NOTE: Mechanical and gravity outdoor air intake openings for HVAC supply air systems shall be located according to Section 401 in the ICC Mechanical Code. See ICC Mechanical Code for any additional requirements.**
K	CO detector	Semi-permanently mounted device which detects carbon monoxide (CO) within the living area (s) of the structure.

Fire Prevention

The generator must be installed at a safe distance away from combustible materials. Engine, alternator, and exhaust system components become very hot during operation. Fire risk increases if unit is not correctly ventilated, is not correctly maintained, operates too close to combustible materials, or if fuel leaks exist. Also, accumulations of flammable debris within or outside the generator enclosure may ignite.

Distance Requirements

See ***Figure 2***. Minimum clearances must be maintained around the generator enclosure. These clearances are primarily for fire prevention, but also to provide sufficient room for removing front and end panels for maintenance purposes.

IMPORTANT NOTE: The diagram provided represents general guidelines, and are not all inclusive. A unit placed in accordance with NFPA requirements, including the offset reduction validated through testing by SWRI, may still allow CO within the structure. Unit may need to be installed farther from the structure than the NFPA requires.

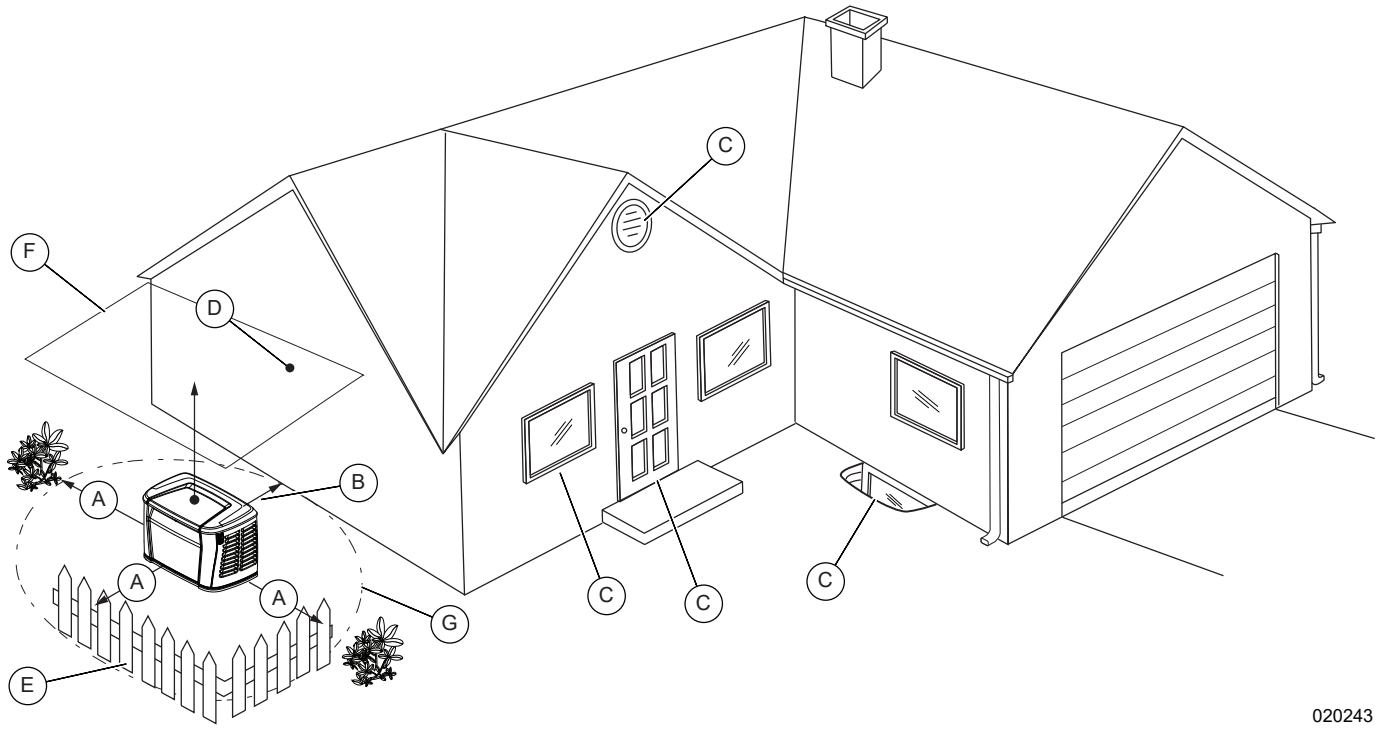

Figure 2. Generator Distance Requirements

ID	Description	Definition
A	Front and end clearance	Minimum clearance from the front and ends of generator must be 3 ft (0.91 m). This includes shrubs, bushes, and trees.
B	Rear clearance	Minimum clearance from the rear of the generator must be 18 in (457 mm). This includes shrubs, bushes, and trees.
C	Windows, vents, and openings	No windows, doors, vents, window wells, or openings in the wall are permitted closer to any point of the generator than what is permitted by locally adopted codes. See ***Fire Codes, Standards, and Guidelines*** for more information.
D	Existing wall	The generator should not be placed closer to existing walls than what is permitted by locally adopted codes, while abiding by the front, end, and rear clearances (A, B) listed above.
E	Removable fence	A removable barrier (non-permanent; without footings) installed as a visual surround. Removable fence panels cannot be placed within 3 ft (0.91 m) of the generator.

F	Overhead clearance	Structures, overhangs, or projections from a wall above the engine generator or above the front, end, and rear clearances (A, B) must be at least 5 ft (1.52 m) vertical distance from the top of the engine generator.
G	Maintenance and servicing	Maneuvering space around generator for performing routine maintenance tasks such as battery replacement and engine service. Do not attempt to conceal generator with shrubs, bushes, or plants. See NEC Article 110.26 for more information.

Fire Codes, Standards, and Guidelines

Generator installation must comply strictly with ICC IFGC, NFPA 37, NFPA 54, NFPA 58, and NFPA 70 standards. These standards prescribe the minimum safe clearances around and above the generator enclosure.

NFPA 37

NFPA 37 is the National Fire Protection Association's (NFPA) standard for the installation and use of stationary combustion engines. Its requirements limit the spacing of an engine generator to a minimum of 5 ft (1.5 m) from an opening in a structure or a structure having combustible walls, and require the engine generator to be located where it is readily accessible for maintenance, repair, and first responders. The standard contains an exception which allows an engine generator to be closer to a combustible wall when approved testing demonstrates a fire originating at the engine does not ignite the combustible structure.

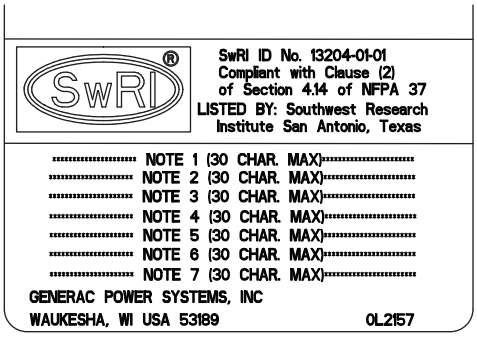

Figure 3. Southwest Research Institute Marking

NOTE: See ***Figure 3***. The Southwest Research Institute (SwRI) is a nationally recognized third party testing and listing agency. SwRI testing certifies a reduction of the minimum clearance from the engine generator to a structure having combustible walls.

The test criteria was to determine the worst case fire scenario within the generator and to determine the ignitability of items outside the engine enclosure at various distances. The enclosure is constructed of non-combustible materials, and the results and conclusions from the independent testing lab indicated that any fire within the engine generator enclosure would not pose any ignition risk to nearby combustibles or structures.

Based on this testing and the requirements of NFPA 37, Sec 4.1.4, the guidelines for installation of the generators listed above are changed to 18 in (457 mm) from the back side of the generator and 3 ft (0.91 m) from the front and ends of the generator to a structure having combustible walls. This offset reduction does not apply to clearances from unprotected openings in the structure or protected openings with fire resistance rating less 1 hour.

For adequate maintenance and airflow clearance, the area above the generator should be at least 5 ft (1.52 m) with a minimum of 3 ft (0.91 m) at the front and ends of the enclosure. This includes trees, shrubs, and bushes. Vegetation not in compliance with these clearance parameters could obstruct air flow. In addition, exhaust fumes from the generator could inhibit plant growth. See ***Figure 2*** and the accompanying descriptions.

Generator Maintenance

Regular maintenance is crucial for minimizing exhaust emissions and reducing the risk of fire or equipment failure. For example:

- A dirty air filter or low engine oil level may cause engine to overheat.
- Incorrect spark plug gaps may cause engine backfiring and incomplete combustion.

IMPORTANT NOTE: See Maintenance section of generator owner's manual to view a table of scheduled maintenance tasks and procedures. Perform all maintenance tasks as directed.

Fresh Air for Ventilation and Cooling

Install unit where air inlet and outlet openings will not become obstructed by leaves, grass, snow, etc. If prevailing winds will cause blowing or drifting, consider using a windbreak at a safe distance to protect the unit.

Water Ingress Avoidance

- Select a location on high ground where water levels will not rise and flood the generator. This unit should not operate in, or be subjected to, standing water.

- Install unit where rain gutter downspouts, roof run-off, landscape irrigation, water sprinklers, or sump pump discharge does not flood unit or spray enclosure, including any air inlet or outlet openings.
- Excess moisture can cause excess corrosion and decrease life expectancy of the unit.

Proximity to Utilities

- Contact local utility providers and verify proposed site selection meets all required utility placement requirements before installation. This could affect warranty coverage.
- Remember, laws and or codes may regulate distance and location of unit to specific utilities.
- It is recommended to pick a location where the generator is as close as possible to the transfer switch and the fuel supply, while verifying the site location conforms to the rest of the Site Selection section.

Verify Wi-Fi Range (If Applicable)

See wireless communication accessory manual shipped with the unit if planning to use the Wi-Fi feature.

Transportation Recommendations

Use a suitable cart or equipment to carry generator, including wooden pallet, to installation site. Place cardboard between cart and generator to prevent any damage or scratches to generator.

Do not lift, carry, or move generator by grasping the louvers. Doing so may bend or damage the sheet metal.

Suitable Mounting Surface

Select non-combustible base type as desired or as required by local laws or codes. The generator is typically approved to be placed on pea gravel, crushed stone, or a concrete base pad. Follow all applicable codes if a concrete base pad is required. Verify any base pad meets or exceeds local codes and requirements for wind ratings.

See ***Figure 4***. Prepare a rectangular area approximately 5 in (127 mm) thick (A) and approximately 3 in (76.2 mm) longer and wider (B) than the footprint of the generator on all sides when using pea gravel or crushed stone.

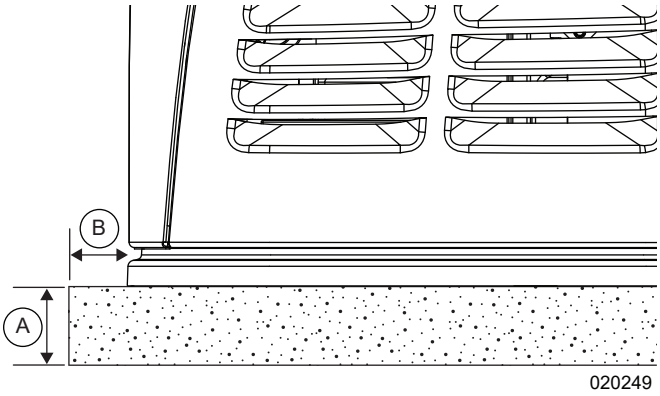

Figure 4. Pea Gravel or Crushed Stone

Concrete base pads must be appropriately sized in accordance with national, state, or local building codes.

Verify surface where generator will be mounted is compacted, leveled, and will not erode over time. Generator must be level within 0.5 in (13 mm) all around.

Recommended concrete base pads: A0006363377 – 3 in (76.2 mm), A0006363376 – 4 in (102 mm).

Placement on Roofs, Platforms, and Other Supporting Structures

Where required to place generator on a roof, platform, deck, or other supporting structure, generator must be placed in accordance with the requirements in NFPA 37, Section 4.1.3. See ***Fire Codes, Standards, and Guidelines*** for permissible clearance reductions. Surface beneath the generator and beyond must be noncombustible to a minimum distance of 12 in (30.5 cm). Contact local building inspection department or fire department to determine which noncombustible materials are approved for installation.

Part No. A0005151099 Rev. B 06/12/2026
© 2026 Generac Power Systems, Inc.
All rights reserved
Specifications are subject to change without notice.
No reproduction allowed in any form without prior written consent from Generac Power Systems, Inc
Generac Power Systems, Inc.
S45 W29290 Hwy. 59
Waukesha, WI 53189
1–888–GENERAC (1–888–436–3722)
www.generac.com