DRAWING TYPE	ITEM ID	ITEM DESCRIPTION	TECHNOLOGIES	DRAWING STATUS
Finish Good	SS3122O-CM	*Vtop Oval 31x22 SS Caramel*	Solid Surface	Ready for Production
Finish Good	SS3122O-AH	*Vtop Oval 31x22 SS* Silver Ash Shark tank	Solid Surface	Ready for Production

REV	ECO #	DESCRIPTION	REV'D BY DATE	CHK'D BY DATE	APRV'D BY DATE
0		Original	4/05/16	4/05/16	4/05/16
1		New Color Added	1/16/18	1/16/18	1/16/18

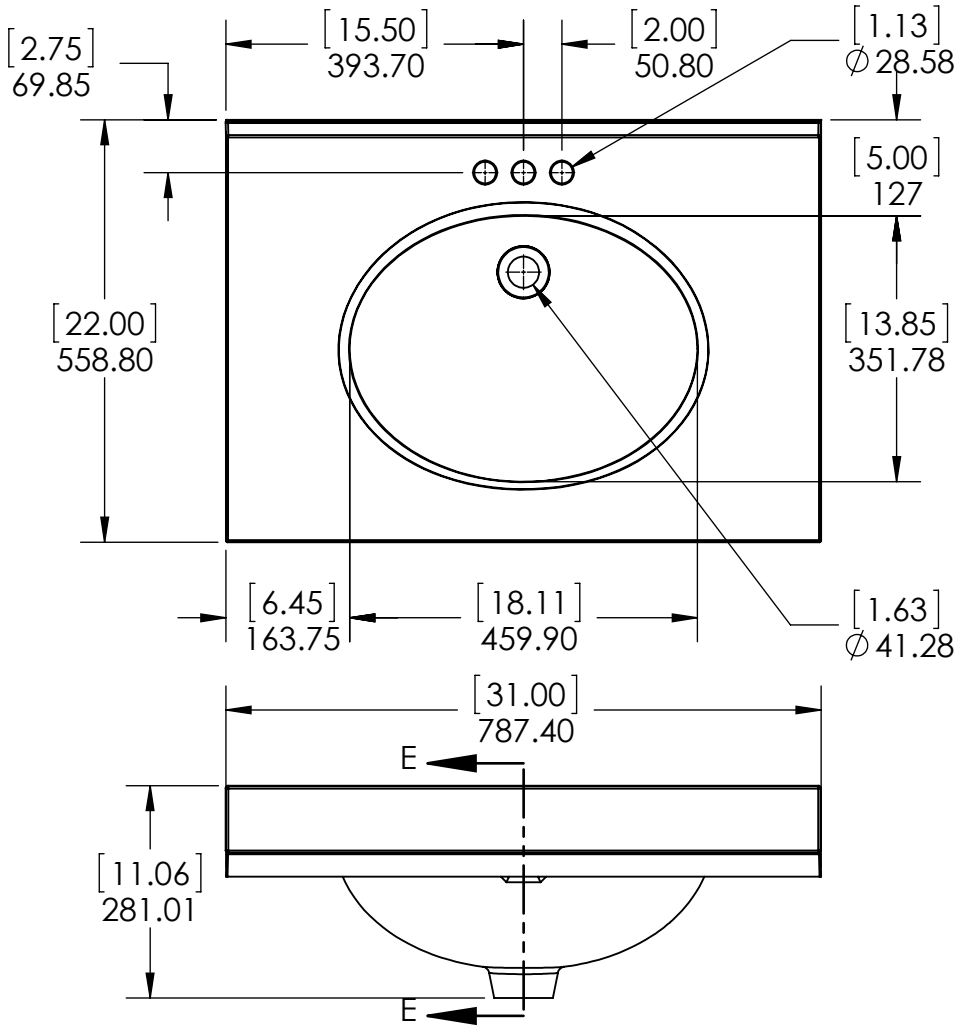

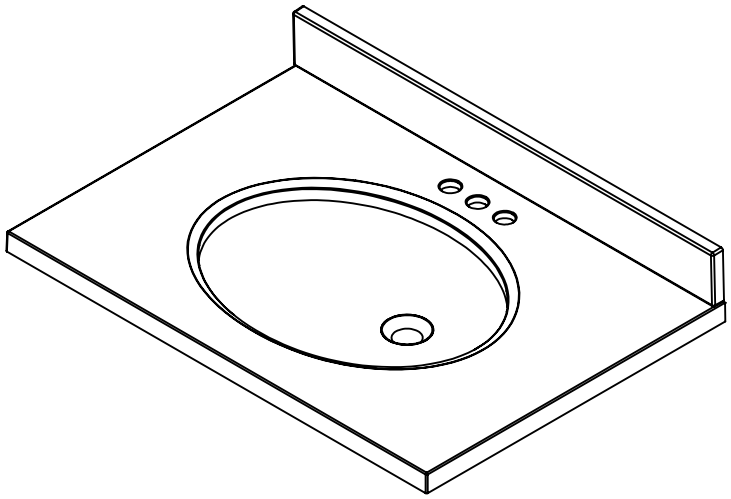

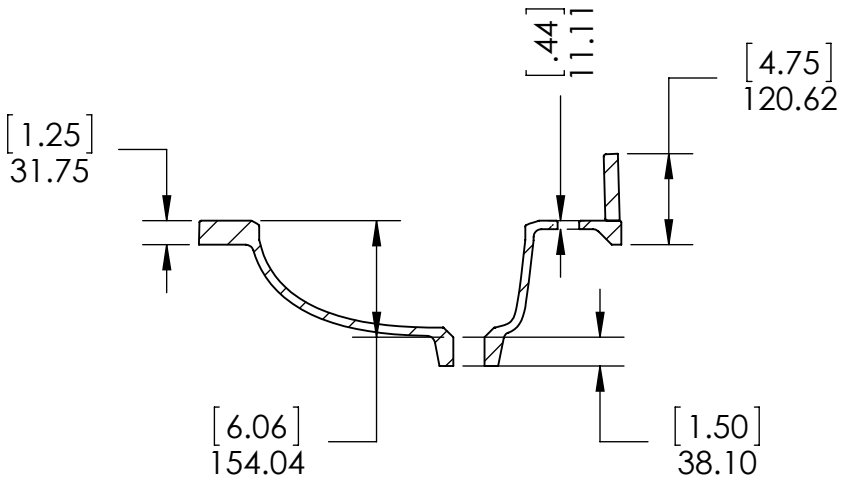

PROPRIETARY AND CONFIDENTIAL

THE INFORMATION CONTAINED IN THIS DRAWING IS THE SOLE PROPERTY OF WOODCRAFTERS. ANY REPRODUCTION IN PART OR AS A WHOLE WITHOUT THE WRITTEN PERMISSION OF WOODCRAFTERS IS PROHIBITED.

UNLESS OTHERWISE SPECIFIED

DIMENSIONS ARE IN MM. AND [INCHES]

TOLERANCES ARE + 0.125 [3.175] - 0.125 [-3.175]

SCALE:1:10

	NAME	DATE
DRAWN	R. Rubio	1/27/16
CHECKED	R. Rubio	4/05/16
ENG APPR.	R. Rubio	4/05/16
MFG APPR.	C. Leal	4/05/16

Wood Crafters®

SIZE A | DWG. NO. *Vtop Oval 31x22 Solid Surface* | REV: 1 | SHEET 1 OF 1