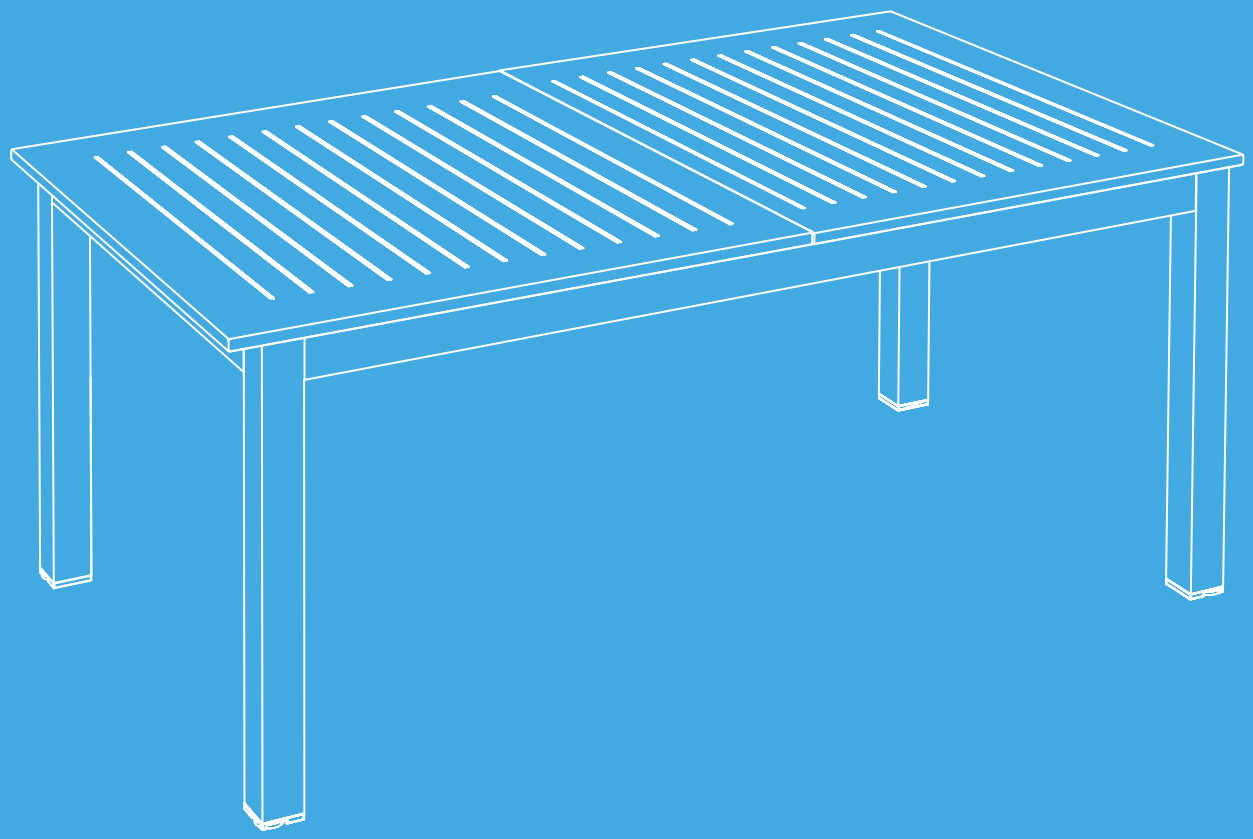

INSTRUCTION MANUAL

Outdoor Dining Table

BEFORE INSTALLATION

- Please list all parts as below first to check if any part is missing and make assembly easier.
- Do be careful that some parts are heavy and sharp.
- Please follow the assembly steps to install the product, if you find spare parts left, don't be worried, the left spare parts are prepared for bad ones if occurred.
- Please fully tighten all screws only when they are in place.
- Please do not exceed the bearing limitations of the product.
- Reconfirm that all bolts, screws, and knobs are secure every 90 days.
- Please retain these instructions for future reference.

CUSTOMER SERVICE FAQS

Q: Some parts are missing, I could not finish assembly.

A: Please kindly circle missing parts in the parts list of the manual, and send pictures to our service team. We will prepare and ship them to you for free ASAP.

Q: My item occurs a quality problem. I am not satisfied with it.

A: Please kindly take it easy and provide us pictures. We would help you to solve it by send replacement parts, replacement products or refund. And you do not need to take time to repack and return it back to us.

Q: The color is not the same as I ordered. How to solve it?

A: Please kindly help to provide us the pictures of the SKU number, the shipping label on the carton and also the product itself, better in one picture. Your pictures will help us to speed up solving the problem.

Q: How to prolong the service life of this item?

A: When it is stained with dusts, oil or sweat, please wipe with a damp cloth. You'd better use a cover when it is out of use.

If you have any problem with this product or our service, please don't be hasty in writing a negative review or feedback. Welcome to contact us right away, our service team will response within 24 hours, we will try our best to help you. Thank you for giving us a chance to improve the product and our service.

★ You're welcome to contact us at needcare@peteroutdoor.com

BEFORE ASSEMBLY NOTICE

2 persons

30min assembly

PART LIST（NOT SHOW ACTUAL SIZE）

A X1

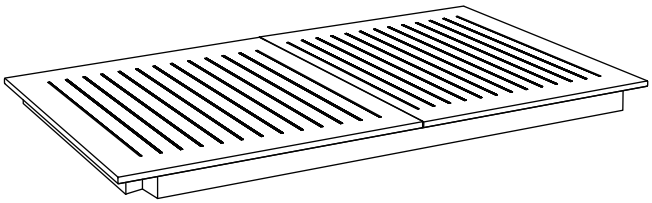

B X4

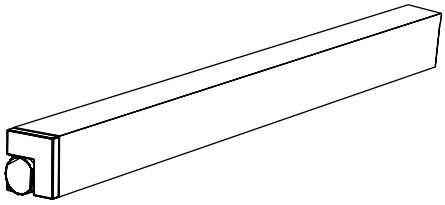

HARDWARE LIST（NOT SHOW ACTUAL SIZE）

C X8

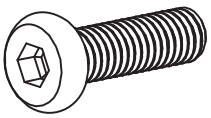

M6X30

D X8

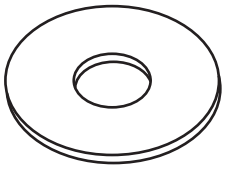

E X8

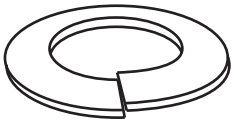

Attention:

- Please do not tighten each screw during each installation step. After completing all installation steps, tighten all screws.
- Please assemble on a carpet or packing material inside the packaging, do not assemble directly on the floor to avoid damage to the tabletop.

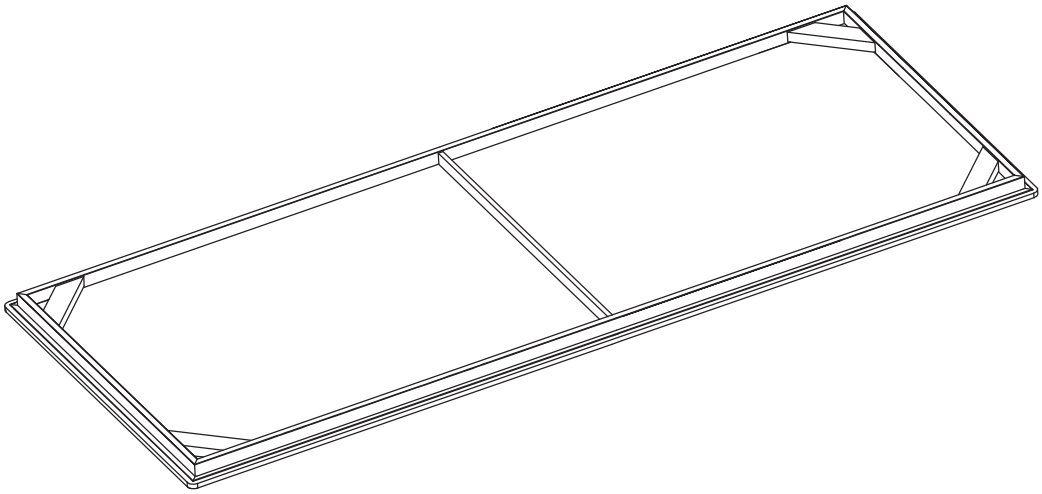

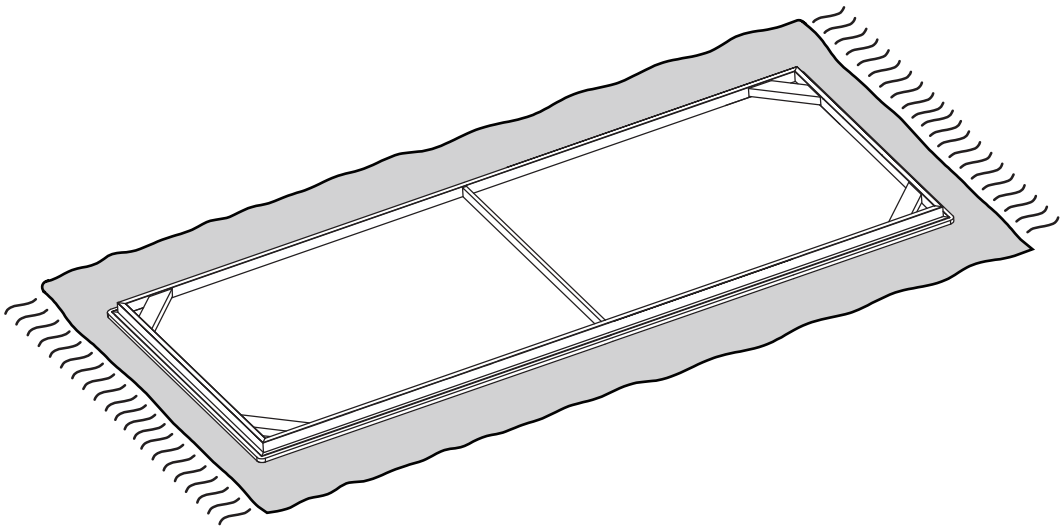

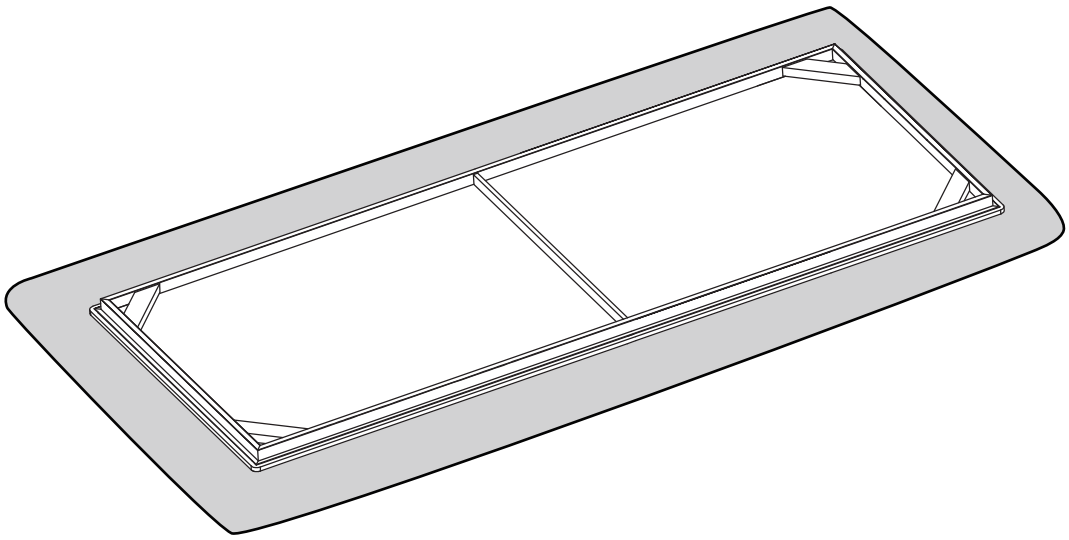

ASSEMBLY STEPS（NOT SHOW ACTUAL SIZE）

STEP 1

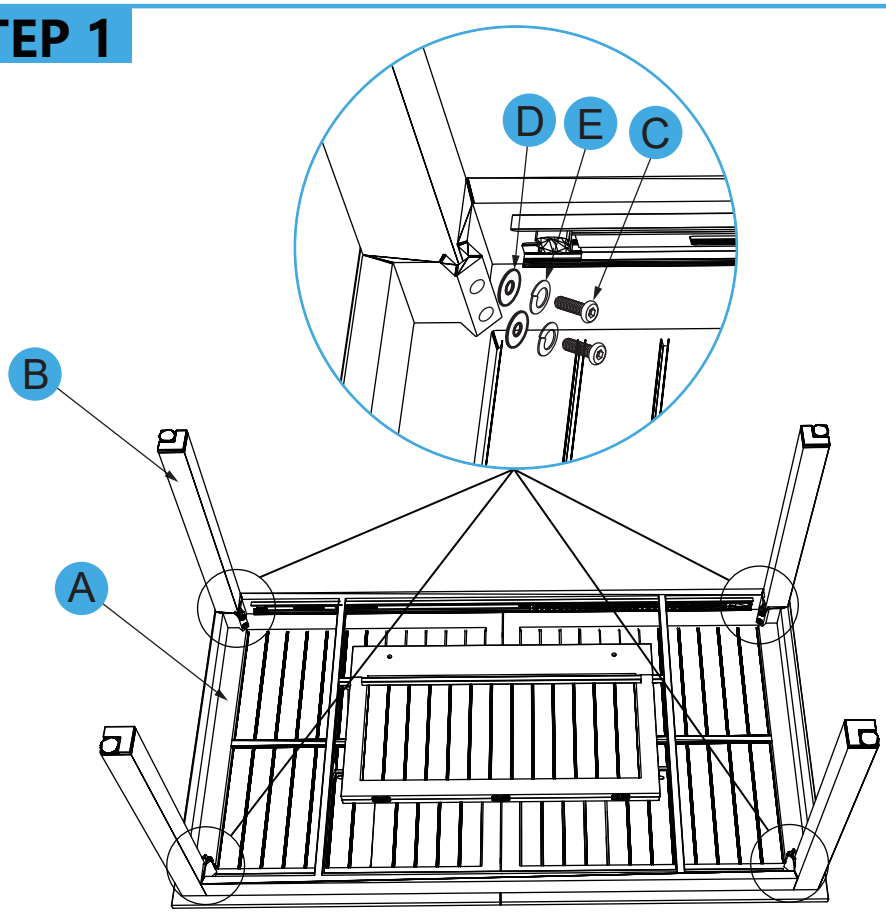

A	X1
B	X4
C	X8
D	X8
E	X8

STEP 2 Unlock to extend the dining table.

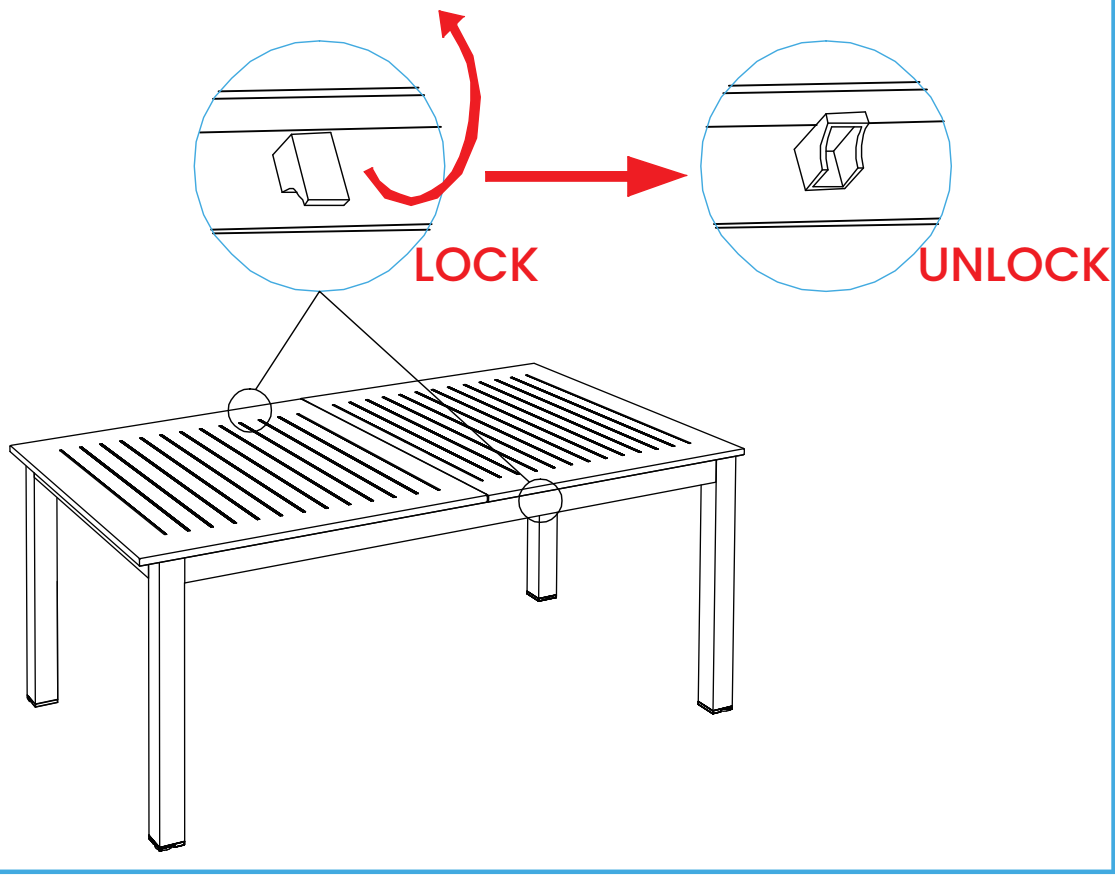

ASSEMBLY STEPS（NOT SHOW ACTUAL SIZE）

STEP 3 Extend the dining table to have more space.

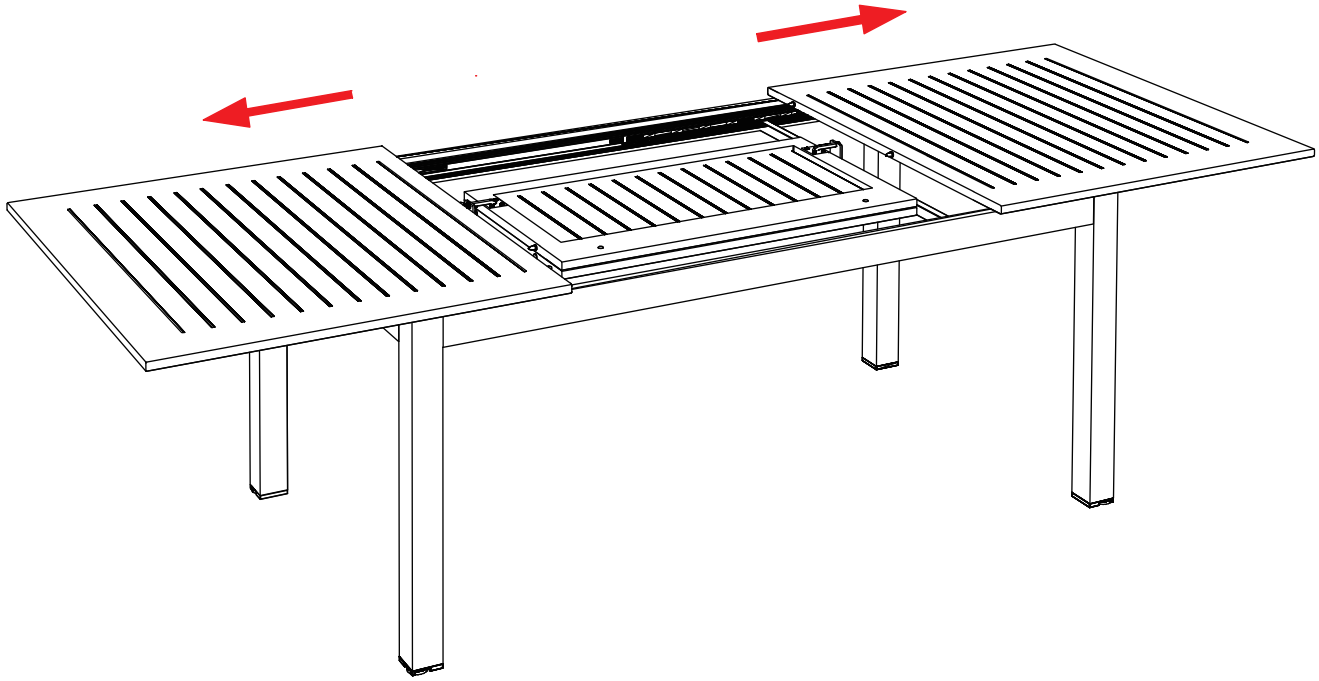

STEP 4 Unfold the hidden tabletop

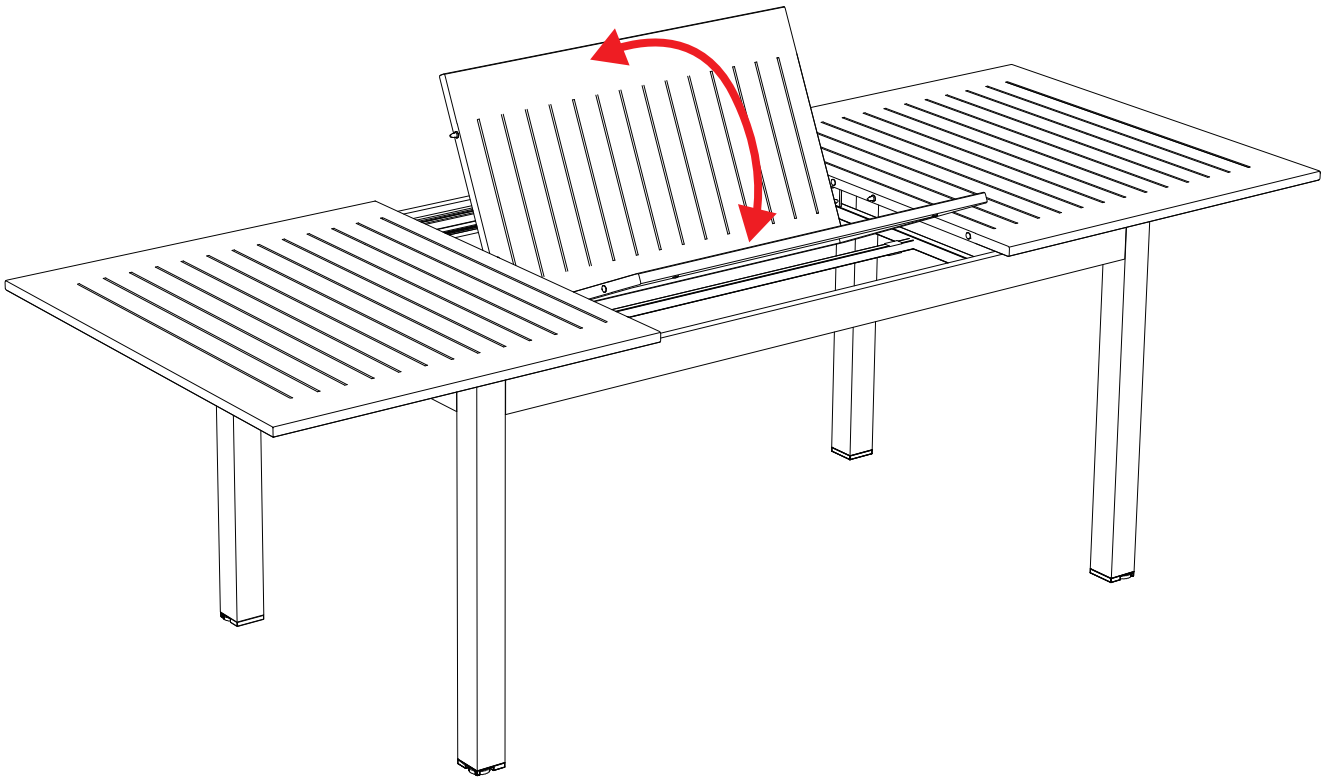

ASSEMBLY STEPS（NOT SHOW ACTUAL SIZE）

STEP 5

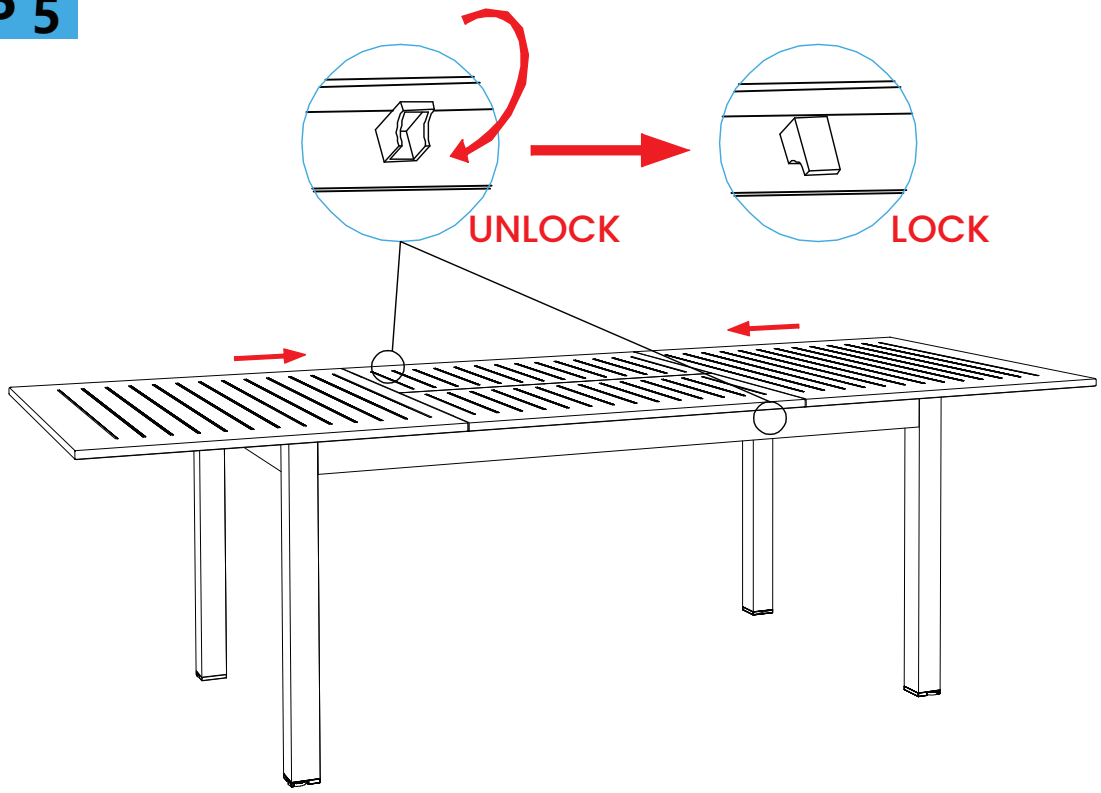

Push both sides of the tabletop inwards first, and then lock to fasten the entire table.

STEP 6

WARNING : Max weight on the table top less than 30lbs.

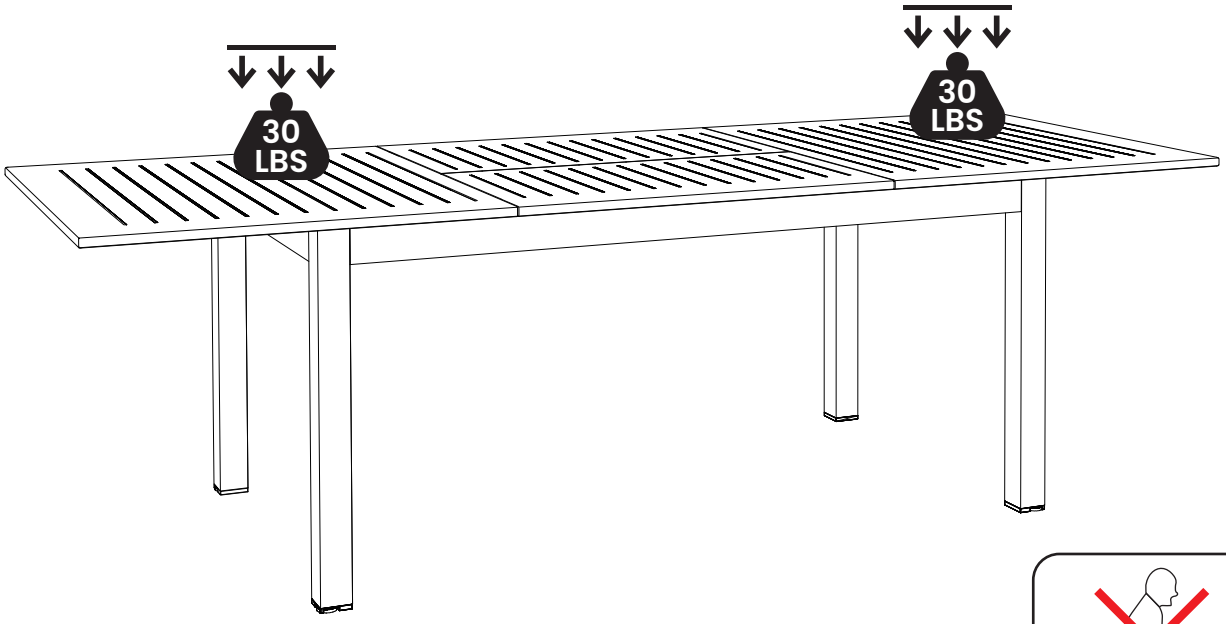

STEP 7

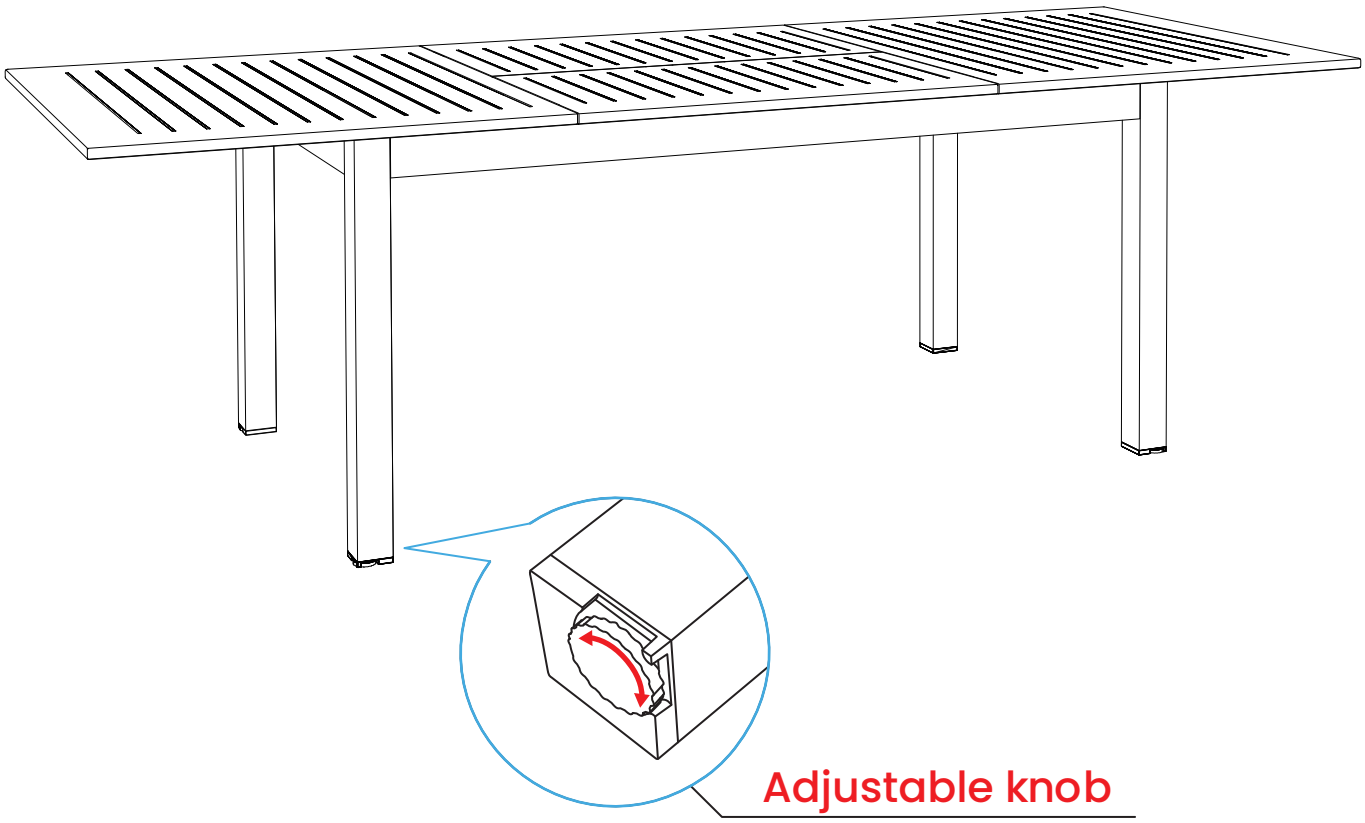

CARE & MAINTENANCE

- Do not put hot items directly on furniture surface.
- Do not clean furniture with harsh cleansers or polish.
- To obtain the longest lifespan of your products, minimizing exposure to direct sunlight is recommended.
- Children should not climb or jump on the furniture.
- Do not write on furniture without a padded barrier to protect the surface.
- Stains may be removed with mild soap solution and damp cloth.
- Keep away from sources of ignition.

PRODUCT WARRANTY INFORMATION

All items can be returned for any reason within 30 days since purchase date and will receive a full refund as long as the item is returned in its original product packaging and all accessories from its original shipment are included. All returned items will receive a full refund back to the original payment method. All returned items will be charged a re-stocking fee, $10 per piece.

All returns must be shipped back to our warehouse at the customer's expense. If the reason for return is a result of an error by us, then we will provide a prepaid shipping label via email. Boxes for return shipping will not be provided by us, and is the customer's responsibility to either use the original shipping boxes or purchase new Boxes.

Pictures may be required for some returns to ensure an item is not damaged prior to its return. Items returned are not considered undamaged until they are received by us and verified as such.

All damages to items are the customer's responsibility until the item has been received by and acknowledge by us as undamaged.

⚠ WARNING

The seller and manufacturer will not be liable for any personal injury, property damage or loss, which result from the incorrect assembly, improper use, inadequate maintenance, or neglect of the product. Whether it's direct, indirect, or incidental.