NOVATTO

WHERE STYLE FLOWS

Bath Porcelain Undermount Sink Guide

P: 844.404.4242 I support@novatto.com I Novatto.com I #WhereStyleFlows

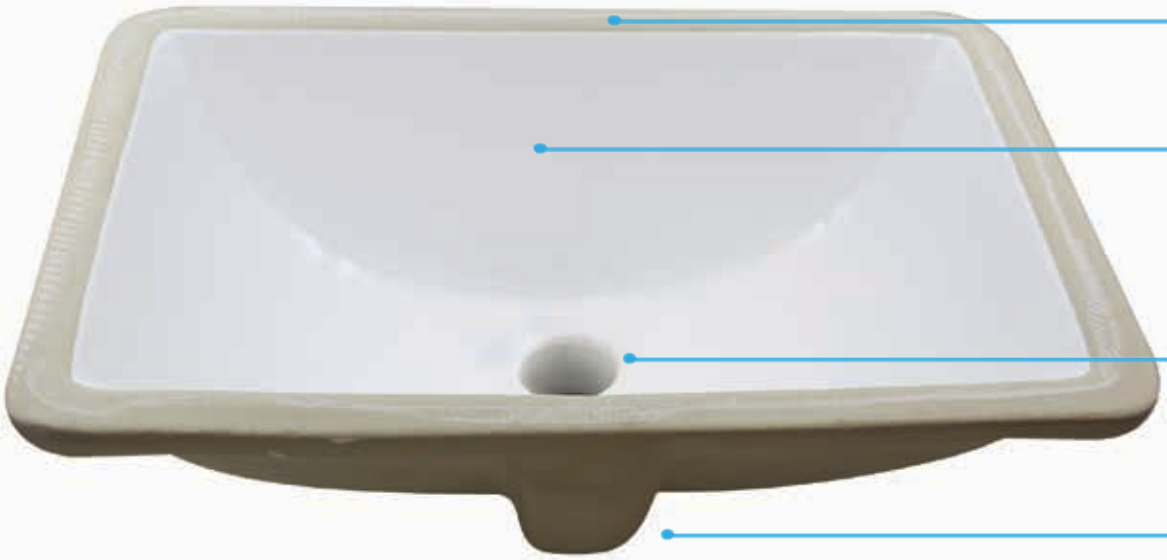

Installation
Undermount

Finish
Glossy White

Drain Opening
1.75" Standard

Over Flow
Works ONLY
w/ overflow drain

THANK YOU

We would like to take this opportunity to thank you for choosing Novatto. We hope you are truly satisfied with our product(s) and enjoy them for years to come. As a small business, we learn the most from you, the customer. Please visit the link below to leave us a review along with high resolution picture(s). You could win a $25 Amazon or Visa gift card.

It's easy as...

- **Go to novatto.com**
- **Find your product's page**
- **On the right, about 1/2 way down click *Write a review***
- **Review, submit & let your style flow**

NOVATTO
WHERE STYLE FLOWS

Novatto I P: 844.404.4242
support@novatto.com
Novatto.com

PORCELAIN UNDERMOUNT SINKS 101

Porcelain is a popular material for bathroom sinks due to its durability and classic look. Clay-based with a lustrous surface, porcelain sinks are resistant to corrosion and discoloration. With their extremely strong surface and resistance to scratching, Novatto's ceramic sinks are not only a centerpiece, but also designed to withstand the onslaught of everyday use. Available in glossy white, Novatto's undermount ceramic sink collection is perfect for any design style.

Undermounted sinks mean that the sink's edges are underneath the countertop and therefore are not visible. An undermount will beautifully streamline a seamless flow from the countertop's edge to your sink, creating a smooth and flowing aesthetic appreciated in contemporary bathrooms.

TOOLS NEEDED FOR ASSEMBLY (not included)

Specialized tools may be necessary to install Novatto's undermount sinks with countertop materials other than wood, marble, or granite.

Questions, problems, missing parts? Before returning to your retailer, call our customer service department at 844.404.4242, 7:00 a.m. - 5 p.m., MST, Monday - Friday. Or email us at: support@novatto.com

UNDERMOUNT ASSEMBLY

Steps to Complete Your Undermount Sink Project

This product is fragile and can break, chip, or cause injury if handled incorrectly. We highly recommend providing the installer with the actual sink and recommend discussing whether you want to install the sink with the countertop already in place or if you want to attach the sink to the countertop and then install it all in one shot.

- **Determine reveal type:** flush or a negative reveal.
- **For layout,** cut along the inside line of the paper template. Compare the template with the sink. Place the template in the desired location and trace with a pencil. Remember to allow clearance for the faucet, backsplash, and plumbing for the sink, plus make sure you have full range of motion for the spout and faucet handle(s).
- **Mark the faucet hole**, centerline on the countertop to the sink. Use manufacturer's guidelines for proper size and placement.
- **Check the space** under the countertop, to where the basin is to be installed, making sure there is enough space to install supply hoses, drainpipe and the sink's bump out for overflow.
- **Cut countertop** using the appropriate machine.

STOP

At this point you must decide how to install your sink. Pre-installing, the easiest option but could also be the heaviest, or installing the sink with the countertop already in place.
If pre-installing, jump to the next section.

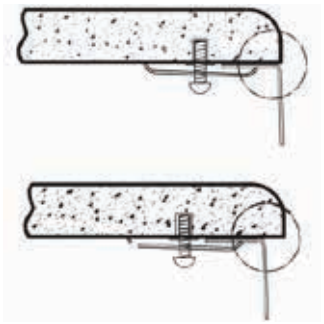

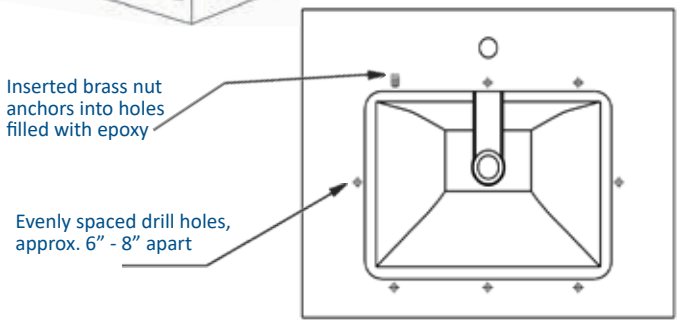

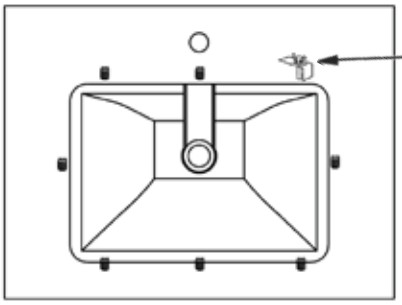

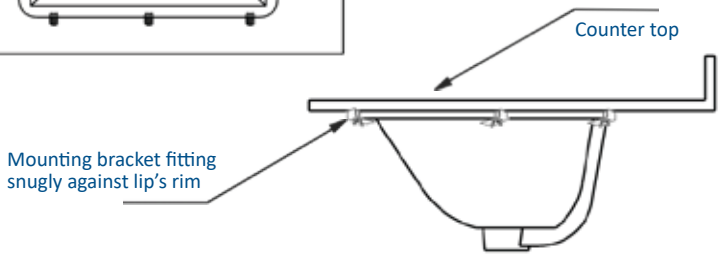

TROUBLESHOOTING TIPS - UNDERMOUNT

Issue	Reason	Solution
Sink seems to be sagging/separating from countertop	Silicon/epoxy didn't set long enough; underside area not cleaned properly	Reseal, set for 24hrs; remove silicon/epoxy, clean underside well
Does not completely drain	Drain is too high; silicone/putty not removed	Make make sure drain is below bevel; remove excess putty/silicone
Sink is changing color or stained	Abrasive cleaners, soaps or other factors in contact with sink	Stop using abrasives, clean and re-seal; use a porcelain stain remover

- **Locate and drill holes** on the underside of the countertop, approximately 1” from the edge of the sink’s cutout. Holes should be evenly spaced, approx. 6”- 8” apart, starting from every corner.
- **Drill 5/16” diameter** x 3/8” deep hole in countertop.
- **Place epoxy in the drilled hole** then insert brass nut anchors (NOT included) into the drilled hole and lightly tap them with a hammer. Wait until the epoxy cures per manufacturer’s instructions.
- **Loosely attach sink clip hardware (NOT included)** with mounting brackets flat against the lip, parallel to the cutout opening, with long bolts, washers and butterfly or wing nuts.
- **Before applying high strength epoxy** or silicone, test fit the sink by placing it under the cut-out to ensure a proper placement. Then clean the sink’s flange as well as the underside of the cutout area of the countertop, making sure that the area is smooth and free from grease. Apply a continuous bead of epoxy/silicone evenly on top of the sink’s flange. Verify the sink is in line and level with the opening in the countertop.
- **After verifying position and alignment** press sink onto countertop’s underside. Turn the bent end of the mounting bracket so it fits snugly over the sink’s rim. Check alignment of the sink again and tighten fasteners to secure the sink.
- **Carefully** remove any excess epoxy/sealant from all surfaces and around hole on underside of countertop.
- **Once the sink** has fully set you may install the drain and fixtures. We suggest you install these items according to the drain and fixture’s installation instructions. Make sure a watertight seal exists on all drain connections. Clean sink and apply the Glacier Sealer if included.

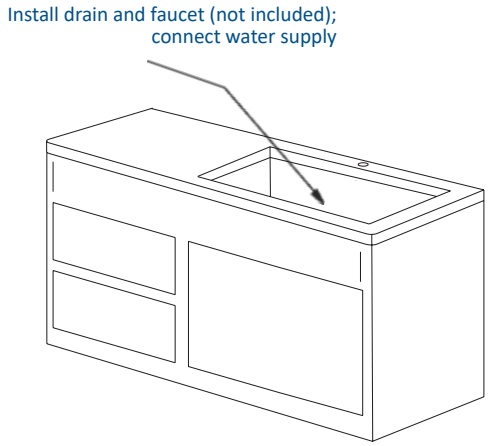

PLEASE NOTE - UNDERMOUNT SINKS:

- Review and abide by all building and plumbing codes.
- Novatto sinks need to be installed by a licensed professional.
- Evaluate current or desired cabinetry. If you are building or remodeling the area from scratch, you will be able to choose cabinets specifically created for your undermount sink.
- Novatto recommends consulting an experienced cabinet maker for assistance and providing them with the actual sink and template to ensure a custom fit.
- If installing your undermount sink AFTER cabinets and countertop have been installed, makes sure the cabinet is secured, plumb, and level. Failure of this step can lead to product damage.
- Be careful when unpacking the sink, we advise setting it on the packing it was received with.
- Inspect the sink prior to installation to make sure it has not been cracked or chipped during shipping. Porcelain edges may be sharp - use caution when handling.
- Additional floor and wall preparation may be required to avoid damaging the sink. Sinks should only be fastened to a solid surface countertop.
- Use the cut-out template provided.

CARE AND MAINTENANCE

Novatto’s ceramic undermount sinks are incredibly easy to clean and maintain. To keep your porcelain sink in pristine condition simply wipe down with a soapy sponge or soft cloth, rinse and dry. A ceramic cleaner such as Glacier Ice Faucet and Sink Restore Cleaner with Sealer Kit or any other non-abrasive ceramic cleaner may be used if grime or minerals build up.

Caution: Do NOT use metal brushes, scouring pads or any abrasive cleaners when cleaning porcelain sinks as this may scratch the ceramic and may discolor or damage the gloss.

Porcelain is made of kaolin, which is a silicate-based mineral found in clay. The clay is sculpted to the required shape and then covered with glaze. After the glaze dries, the piece is fired at extremely high temperatures, triggering a physical reaction, which turns the surface of the sink into the durable, shiny finish known through out the world. Novatto’s in-house testing have found the sinks to be very durable and forgiving. Normal items such as toothbrushes, small jewelry, bottles, etc. will not damage a Novatto ceramic sink. Do not allow the ceramic vessel sink to come in contact with steel or other objects which could scratch or damage the sink. Novatto recommends using a professional plumber when installing your ceramic sink.

Warning: Do NOT use acidic household cleaners, harsh chemical wipes, or abrasives.

PRE-INSTALLED ASSEMBLY

Steps to Complete Your Pre-Installed Sink Project

The following instructions assume your professional has already cut the sink and faucet hole(s); drilled and filled the holes for your sink clips (NOT included) with epoxy and brass nut anchors (NOT included) and the epoxy has cured. It is also assumed the vanity is in place, and the countertop has not yet been installed.

We highly recommend consulting an experienced professional for assistance. Providing them with the actual sink, countertop and template will ensure a perfect fit.

- **Carefully turn the counter top over**, resting it on a soft, stable surface to prevent damage.
- **Position the sink over it's cutout.** Make sure the sink is centered with the faucet hole and is evenly spaced between the bolt holes. You may also use the template provided.
- **Use a pencil** to outline the sink. Lift the sink and turn it over. Apply a bead of continuous epoxy or silicone sealant around the top edge of the rim.
- **Carefully place the sink** upside down on the counter top, positioning it within your marked outline. Once positioned, press firmly into place and immediately scrape off the extrusive silicon.
- **At each** of the bolt holes in the counter top, attach the sink clips (NOT included) by placing the long end of the bracket flat against the sink's lip. Thread the long bolt, washer and butterfly/wing nuts (NONE included) through the brackets into the bolt holes and tighten.
- **Carefully turn** the counter top and sink over. If needed, reposition the sink by slightly loosening the wing bolts and adjusting. Wipe away any excess sealant with either a damp cloth or acetone or rubbing alcohol. Place sink and counter top on cabinet. Proceed to install the counter top, drain and fixtures according to their manufacturer's instructions. Allow all silicone to dry for 24 hours.

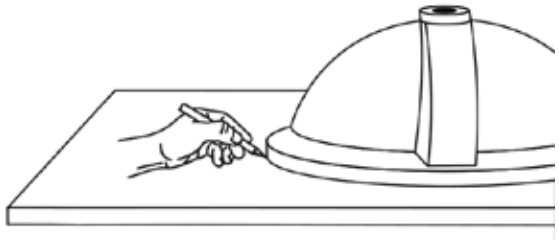

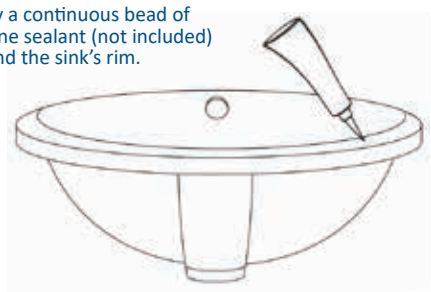

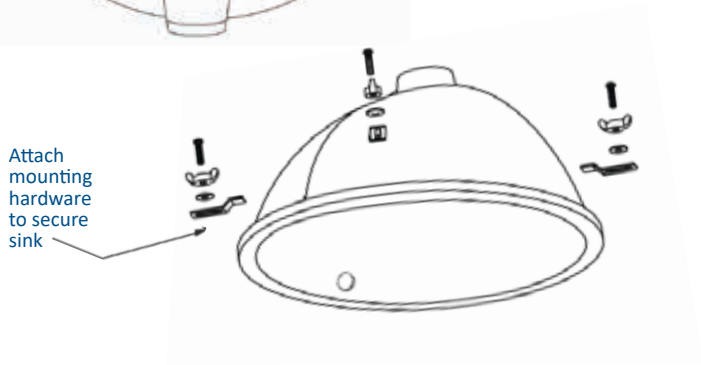

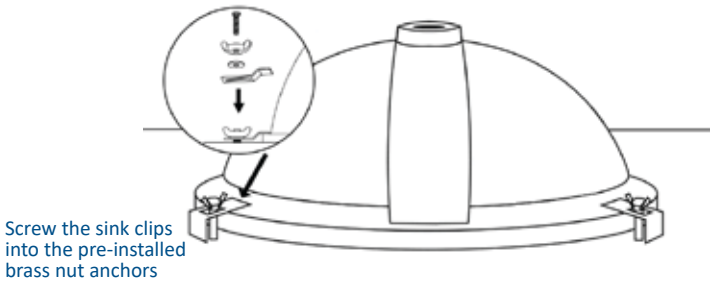

TROUBLESHOOTING TIPS - PRE-INSTALL

Issue	Reason	Solution
Epoxy/Silicone not adhering/sealing	Area wasn't dust free/cleaned properly	Remove epoxy/silicone, wipe down area with dry cloth, then damp, then dry
There is a gap between the basin and the countertop	Too much silicon was "scraped" off	Carefully refill with silicon
Long bolts will not screw into brass nut anchors	Epoxy got inside of the anchor	Use acetone or rubbing alcohol to remove any excess epoxy, try again

LIMITED LIFETIME WARRANTY

Novatto products have been made under the highest standards of craftsmanship and quality. Each product of ours under goes strict quality control testing to ensure years of enjoyment. Novatto's ceramic sinks offer a Limited lifetime warranty for defects in workmanship and/or materials when the product was purchased through an authorized Novatto dealer.

Novatto's ceramic sinks are backed by Novatto's Lifetime Limited warranty. Novatto warrants to the original consumer purchaser for as long as the original consumer purchaser owns their home (the "Warranty Period"for homeowners), this sink will be free from defects in material and workmanship for one (1) year. All other purchasers including purchasers for industrial, commercial and business use are excluded from this warranty. Warranties are not transferable, between homes or owners and are only applicable to residential use.

Novatto is not responsible for labor charges, installation, *loss, injury or any other incidental or consequential costs. In no event shall the liability of Novatto products surpass the purchase price of the replacement part. In no event shall Novatto be liable for loss of profits or any such *loss, or any direct or indirect, special, incidental or consequential damages howsoever incurred or designated arising out of any breached claim of warranty. If you believe you have a warranty claim, contact Novatto, either through your local Dealer, Plumbing Contractor, Home Center, or by writing: Novatto, Inc., Attn: Product Support, 3533 E. Corona Ave., Phoenix, AZ, 85040, USA. Please be sure to provide all pertinent information regarding your claim, including a complete description of the problem, the product, model number, color, finish, the date the product was purchased and from whom the product was purchased. Also include your original invoice. For other information email: productsupport@novatto.com or write to the above address.

Novatto makes no implication that our products comply with any or all local building or plumbing codes. It is the consumer's responsibility to determine local code compliance. This warranty extends to the original purchaser and first consumer for one (1) year.

Need more help?
Feel free to contact our support anytime at 844.404.4242 or email us at: productsupport@novatto.com. More information is also available at: www.Novatto.com.

*Some states, provinces, and nations do not allow the exclusion or limitation of incidental or consequential damages, so the above limitations or exclusions may not apply to you.

Get the most out of your Novatto product by registering!

By registering, you verify Novatto's warranty. Plus you will learn of special events, receive helpful tips, and much more!

FAQs

Do I need to seal my porcelain sink? Why?

Short answer is yes. Sealer prevents dirt, oil, minerals, contaminants and stains from penetrating the porcelain. Use a product such as Novatto's Glacier Ice Faucet & Sink Restorer and Cleaning Kit with Sealer which will seal the sink's surface and prevent stains such as hard water spots. Be sure your sink is completely clean before sealing it. We then recommend re-sealing every year or two to keep your sink in its gleaming state.

Is there a difference between Ceramic and Porcelain sinks?

Ceramic is a general term for materials made by heating clay in a kiln. Porcelain is a type of ceramic heated to a much higher temperature than other ceramics, between 2,200- and 2,600-degrees F. This extreme heat adds strength to porcelain. Otherwise there is no real difference.

Is there a template for my ceramic sink?

There should've been a template with your sink. Compare your template to the actual sink before making any cuts. Make sure there is adequate space for your faucet and back-splash, plus, check faucet's handle(s) and spout for full range of motion. Please email us if your template seems to be missing: support@novatto.com.

Should I hire or consult a professional?

The benefit of hiring a professional is they have likely done the job dozens to hundreds of times. Precision is key to this project, to ensure no leaks nor surprise incidents in which you find your sink in the bottom of your cabinet! Plus, your sink may require custom cabinetry in order to guarantee proper fit and safety.