Comfort, Quality & Style Since 1998

FireSense®

Weyland Round Aluminum LPG Fire Pit

Item#: 62752

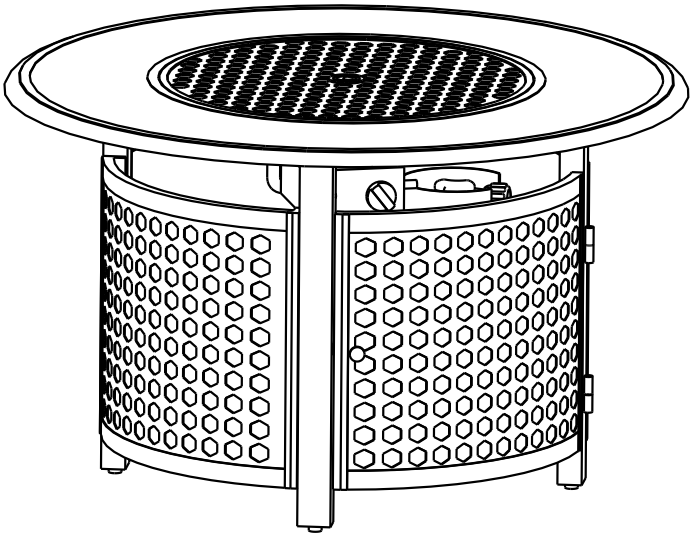

WARNING
FOR YOUR SAFETY

1. Improper installation, adjustment, alteration, service or maintenance can cause injury or property damage.
2. Read the installation, operation, and maintenance instructions thoroughly before installing or servicing this equipment.
3. Failure to follow these instructions could result in fire or explosion, which could cause property damage, personal injury, or death.

WARNING

For Outdoor Use Only

WARNING

This product can expose you to chemicals including Carbon Monoxide, Lead, Chromium (hexavalent compounds), Di(2-ethylhexyl) phthalate (DEHP) and Diisononyl phthalate (DINP), which are known to the State of California to cause cancer and birth defects or other reproductive harm. For more information, go to www.P65Warnings.ca.gov.

C ETL LISTED US

Intertek

Conforms to ANSI STD Z21.97-2014,
Certified to CSA STD 2.41-2014 Outdoor decorative gas appliances

ATTACH YOUR RECEIPT HERE

Keep a copy of your proof of purchase or order confirmation which will be needed if you need to contact us about warranty coverage.

Purchase Date: _____

Questions, problems, missing parts?

Before returning to your retailer, our exceptional customer service is available.

Call us toll-free at **(866) 985-7877**, email us at **cservice@welltraveled.net**, or go online and live chat at **www.wtliving.com**. Our hours are: **9 a.m. – 6 p.m., EST, Monday – Friday.**

Manual updated Feb 2019 | Code ZDMF

TABLE OF CONTENTS

Table of Contents	Page 2
Before You Begin	Page 2
Package Contents	Page 3
Safety Information	Page 4
Assembly	Pages 5-8
Operating Instructions	Pages 9-12
Conversion to Natural Gas	Pages 13-15
Care and Maintenance	Page 16
Troubleshooting	Page 17
Warranty Information	Page 18

BEFORE YOU BEGIN

Please read and understand this entire manual before attempting to assemble, operate or install this appliance. If you have any questions regarding the product, please call us toll-free at **(866) 985-7877**, email us at **cservice@welltraveled.net**, or go online and live chat at **www.wtliving.com**.
Our hours are: **9 a.m. – 6 p.m., EST, Monday – Friday.**

This manual contains important information about the assembly, operation and maintenance of this LPG fire pit. General safety information is presented in the first few pages and is also located throughout this manual. Keep this manual for future reference and to educate new users of this appliance.

PACKAGE CONTENTS

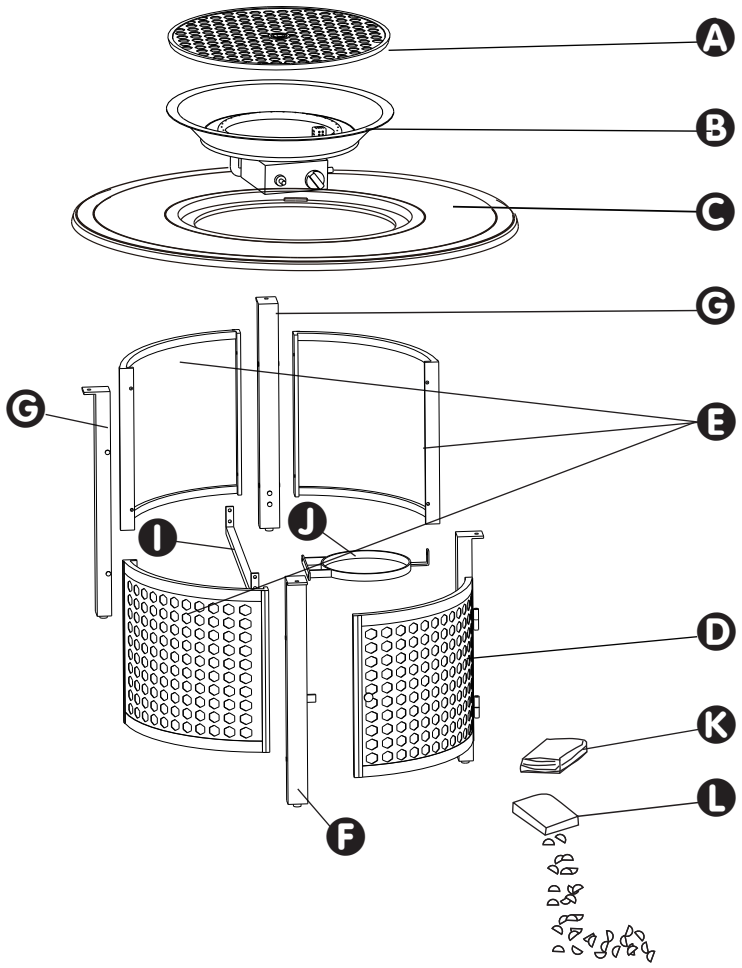

PART	DESCRIPTION	QUANTITY
A	Removable Burner Cover	1
B	Burner	1
C	Table Top	1
D	Door Panel	1
E	Panels	3
F	Door Frame Leg	1
G	Support Legs	2
I	Tank Support Bar	1
J	Tank Support Ring	1
K	Protective Cover	1
L	Fire Glass	1

HARDWARE CONTENTS

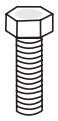

M

Bolt (8x20mm)
Qty: 5
(4 for assembly +1 extra)

N

Washer/Spring Washer (M8)
Qty: 5
(4 for assembly +1 extra)

O

Stud (6x40mm)
Qty: 13
(12 for assy. +1 extra)

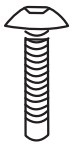

P

Bolt (6x20mm)
Qty: 8
(7 for assy. +1 extra)

Q

Washer (M6)
Qty: 20
(19 for assy. +1 extra)

R

Spring Washer (M6)
Qty: 13
(12 for assy. +1 extra)

S

Nut (6mm)
Qty: 13
(12 for assy. +1 extra)

T

Plastic Cap (8mm)
Qty: 4

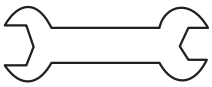

U

Wrench

V

Hex Key

SAFETY INFORMATION

This appliance has been tested to and complies with the ANSI Z21.97-2014, Outdoor Decorative Gas Appliances CGA CR 97-003 Outdoor Gas Fireplaces. The installation must conform to local codes or in the absence of local codes to the National Fuel Gas Code. ANSI Z223.1. This manual contains important information about the assembly, operation and maintenance of this fire pit. General safety information is presented in these first few pages and is also located throughout the manual. Keep this manual for future reference and to educate new users of this product. This manual should be read in conjunction with the labeling on the product. Safety precautions are essential when any mechanical or propane fueled equipment is involved. These precautions are necessary when using, storing, and servicing. Using the equipment with the respect and caution demanded will reduce the possibilities of personal injury or property damage. The following symbols (shown below) are used extensively throughout this manual. Always heed these precautions, as they are essential when using any mechanical or propane fueled equipment.

WARNING

Failure to comply with the precautions and instructions provided with this fire pit can result in death, serious bodily injury and property loss or damage from hazards of fire, explosion, burn, asphyxiation, and/or carbon monoxide poisoning. Only persons who can understand and follow the instructions should use or service this fire pit.

WARNING / DANGER

WARNING/DANGER indicates an imminently hazardous situation which, if not avoided, will result in death or serious injury.

WARNING

Do not store or use gasoline or other flammable vapors and liquids in the vicinity of this or any other appliance. An LP-cylinder not connected for use shall not be stored in the vicinity of this or any other appliance.

WARNING

Solid fuels shall not be burned in this appliance.

DANGER

EXPLOSION—FIRE HAZARD

- Keep solid combustibles, such as building materials, paper, or cardboard a safe distance away from the fire pit as recommended by the instructions.
- Provide adequate clearances around air openings into the combustion chamber. Never use the fire pit in spaces which do or may contain volatile or airborne combustibles, or products such as gasoline, solvents, paint thinner, dust particles, or unknown chemicals.
- During operation, this appliance can be a source of ignition. Keep fire pit area clear and free from combustible materials, gasoline, paint thinner, cleaning solvents and other flammable vapors and liquids. Do not use fire pit in areas with high dust content. Minimum fire pit clearances from combustible materials: 2 feet (24 inches) from the sides & 2 feet (24 inches) from the rear, 6 feet (72 inches) from ceiling.
- Never store propane near high heat, open flames, pilot lights, direct sunlight, other ignition sources or where temperatures exceed 120 degrees F (49 degrees C).
- Propane vapors are heavier than air and can accumulate in low places. If you smell gas, leave the area immediately.
- Never install or remove a propane cylinder while the fire pit is lighted, or near flame, pilot lights, or other ignition sources or while fire pit is hot to the touch.
- This fire pit is red hot during use and can ignite flammables too close to the burner. Keep flammables at least 6 feet (72 inches) from top and 2 feet (24 inches) from sides. Keep gasoline and other flammable liquids and vapors well away from fire pit.
- Store the propane cylinder outdoors in a well ventilated space out of the reach of children. Never store the propane cylinder in an enclosed area (house, garage, etc.). If fire pit is to be stored indoors, disconnect the propane cylinder for outdoor storage.

WARNING

- This fire pit is fueled by propane gas. Propane gas is invisible, odorless, and flammable. An odorant is normally added to help detect leaks and can be described as having a "rotten egg" smell. The odorant can fade over time so leaking gas is not always detectable by smell alone.
- Propane gas is heavier than air and leaking propane will sink to the lowest level possible. It can ignite by ignition sources including matches, lighters, sparks, or open flames of any kind many feet away from the original leak. Use only propane gas set up for vapor withdrawal.
- Store or use propane gas in compliance with local ordinances and codes or with ANSI/NFPA 58. Turn off propane when not in use.

DANGER

FOR YOUR SAFETY

If you smell gas:

1. Shut off gas to the appliance.
2. Extinguish any open flame
3. If odor continues, keep away from the appliance and immediately call your gas supplier or fire department.

WARNING

We cannot foresee every use which may be made of our fire pit. Check with your local fire safety authority if you have questions about fire pit use. Other standards govern the use of fuel gases and heat producing products for specific uses. Your local authorities can advise you about these. If no local codes exist, follow National Fuel Gas Code, ANSI Z223.1. In Canada, installation must conform to local codes. If no local codes exist, follow the current National standards of CANADA CAN/CGA-B 149.2.

WARNING:
FOR OUTDOOR USE ONLY

CARBON MONOXIDE HAZARD

- This fire pit is a combustion appliance. All combustion appliances produce carbon monoxide (CO) during the combustion process. This product is designed to produce extremely minute, non-hazardous amounts of CO if used and maintained in accordance with all warnings and instructions. Do not block air flow into or out of the fire pit.
- Carbon Monoxide (CO) poisoning produces flu-like symptoms, watery eyes, headaches, dizziness, fatigue and possibly death. You can't see it and you can't smell it. It's an invisible killer. If these symptoms are present during operation of this product get fresh air immediately!
- For outdoor use only. Using this fire pit in an enclosed space can kill you. Never use this fire pit in an enclosed space such as a camper, tent, home, or other unventilated or enclosed area.
- This fire pit consumes air (oxygen). Do not use in unventilated or enclosed areas to avoid endangering your life.

WARNING

Improper installation, adjustment, alteration, service or maintenance can cause property damage, injury or death. Read the installation, operation and maintenance instructions thoroughly before installing or servicing this equipment.

PREPARATION

Before beginning assembly, empty contents of carton and make sure all parts are present. Place all parts on a soft, level surface for assembly. NOTE: It is best to use TWO PEOPLE to assemble this gas fire pit.

Estimated Assembly Time: 60 Minutes | DO NOT over tighten hardware!

1 Assemble the fire pit base: Locate **Door Panel Ⓓ**, 3 **Side Panels Ⓔ**, **Door Frame Leg Ⓕ**, and 2 **Support Legs Ⓖ**.

Screw **Studs Ⓞ** into the holes in the sides of all 4 legs, including the leg pre-assembled to the door. Beginning with **Door Frame Leg**, join the legs and panels together by fitting the holes on the sides of the **Side Panels** onto the **Studs** installed earlier.

To secure the Legs to the Panels, place a **Washer Ⓠ** then a **Spring Washer Ⓡ** onto each **Stud**, then thread a **Nut Ⓢ** onto each **Stud**. Do not tighten the hardware until the entire base is assembled.

Then, firmly tighten all **Nuts** with the **Wrench Ⓤ**, but DO NOT OVERTIGHTEN.

Hardware Used:
- **Ⓞ Stud** (6x40mm) x 12
- **Ⓠ Washer** (M6) x 12
- **Ⓡ Spring Washer** (M6) x 12
- **Ⓢ Nut** (M6) x 12

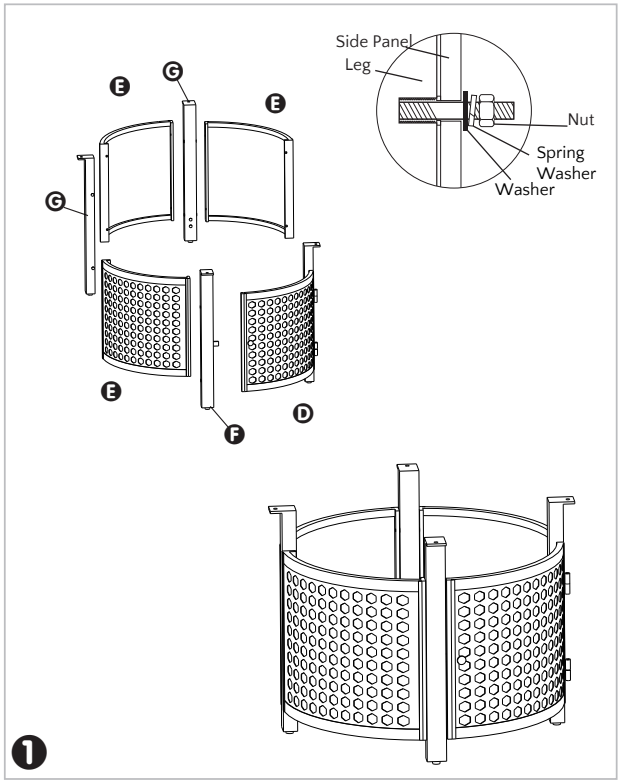

2 Place **Table Top Ⓒ** upside-down on a nonabrasive surface. Carefully turn the assembled fire pit base upside-down and align the holes in the top of the Legs with the holes on **Table Top.**

Place a **Spring Washer Ⓝ**, then a **Washer Ⓝ** on each of 4 **Bolts Ⓜ**. Insert **Bolts** through the aligned holes into the **Table Top**, then tighten with **Wrench Ⓤ**.

Cover bolt heads with **Plastic Caps Ⓣ**.

Hardware Used:
- **Ⓜ Bolt** (8x20mm) x 4
- **Ⓝ Washer/Spring Washer** (8mm) x 4
- **Ⓣ Plastic Cap** x 4

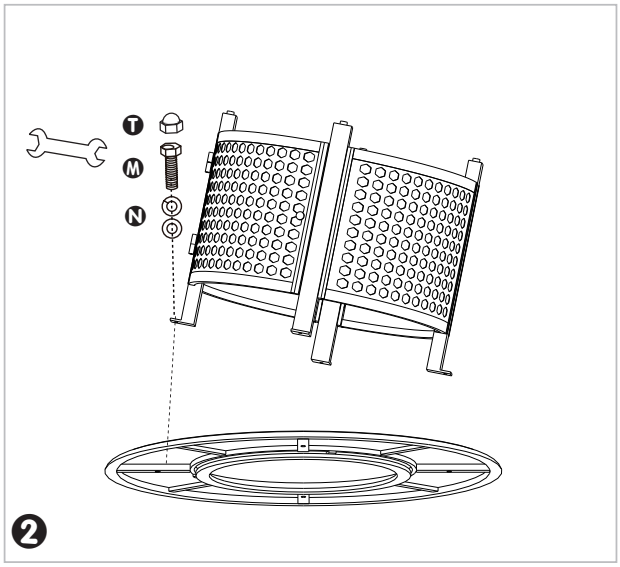

3

Attach **Tank Support Ring** ❶ to **Tank Support Bar** ❶ by aligning holes in the center of **Tank Support Bar** with holes in the end of **Tank Support Ring**. Place a **Washer** Ⓠ on each of 2 **Bolts** Ⓟ and insert into holes. Tighten with **Hex Key** Ⓥ.

Hardware Used: Ⓟ **Bolt** (6x20mm) x 2
Ⓠ **Washer** (M6) x 2

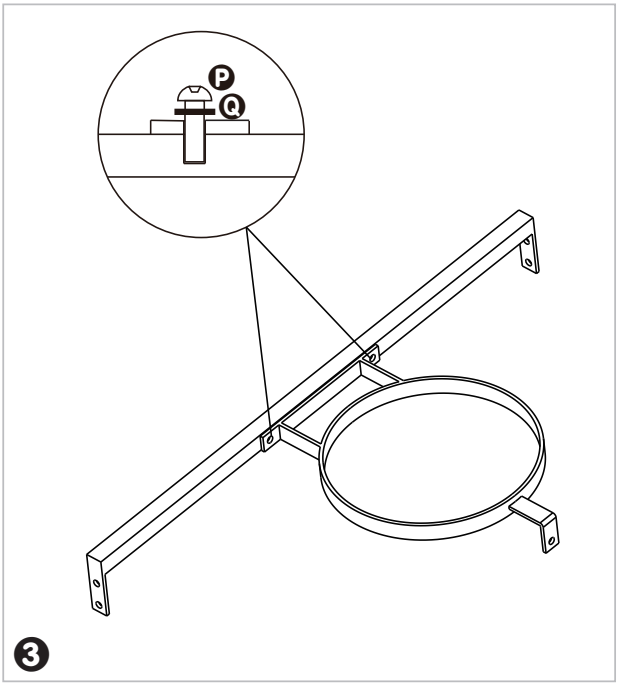

4

Attach **Tank Support Bar** ❶ to **Door Frame Leg** Ⓕ and **Support Leg** Ⓖ by aligning holes at each end of **Tank Support Bar** with holes at the bottom of **Door Frame Leg** and **Support Leg**. Place a **Washer** Ⓠ on each of 4 **Bolts** Ⓟ and insert into holes. Tighten with **Hex Key** Ⓥ.

Attach **Tank Support Ring** ❶ to the leg of **Door Panel** Ⓓ by aligning holes in front of **Tank Support Ring** with holes in leg. Place a **Washer** on a **Bolt** and insert through hole in **Tank Support Ring** into leg. Tighten with **Hex Key**.

Hardware Used: Ⓟ **Bolt** (6x20mm) x 5
Ⓠ **Washer** (M6) x 5

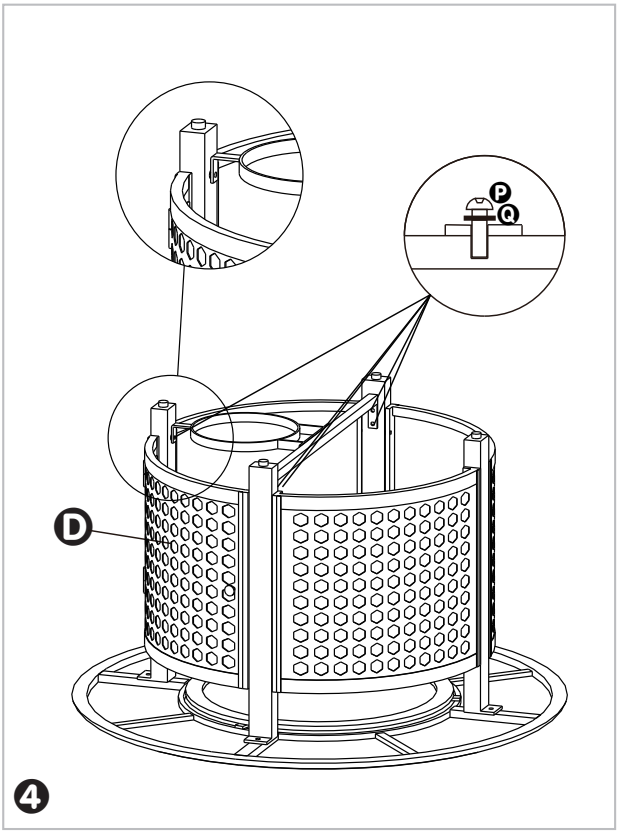

5 When all panels and the tank support have been secured, turn the table upright. Place the **Burner Ⓑ** into the hole in the **Table Top**, rotated toward the left side of the table.

WARNING:
This fire pit is constructed of aluminum, a relatively soft, flexible metal. Do not sit, stand, or lean heavily on the top of the fire pit, which can cause bending or warping.

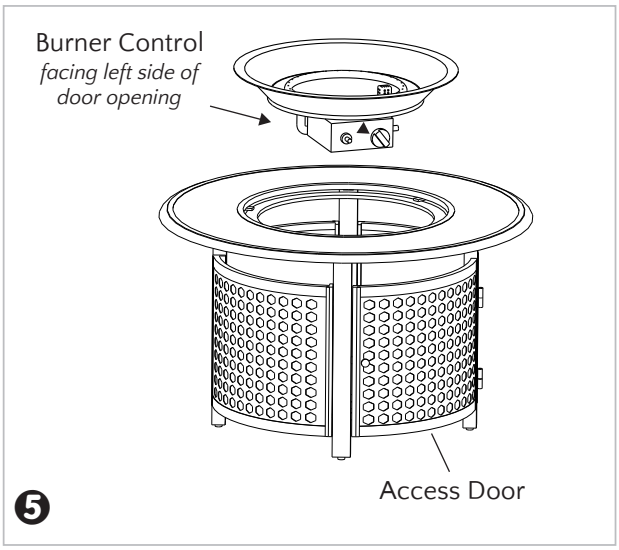

6 Pour the **Fire Glass Ⓛ** around the **Burner**. Be careful not to obstruct the pilot light housing. Put the **Removable Burner Cover Ⓐ** on the **Burner** when not in use.

When the fire pit is not in use or after use, when the fire pit has cooled COMPLETELY, cover it with the **Protective Cover Ⓚ**. DO NOT PUT THE PROTECTIVE FIRE PIT COVER ON A HOT FIRE PIT.

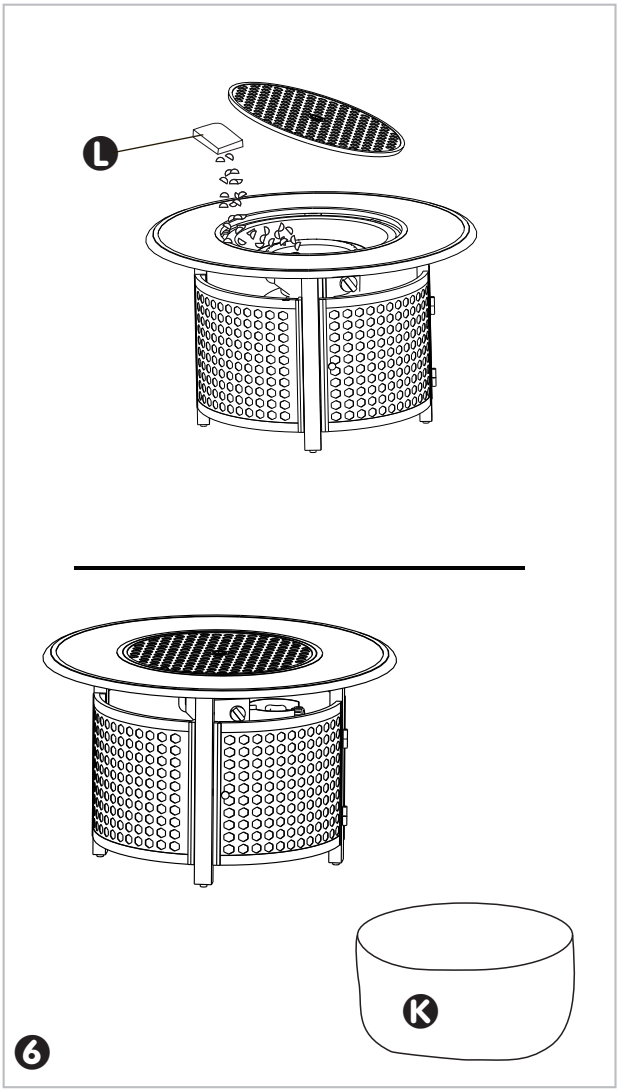

7 Connect hose and regulator to cylinder. (The propane gas and cylinder are sold separately.) Use a standard 20lb propane cylinder only.

Use this fire pit only with a propane vapor withdrawal supply system. See chapter 5 of the standard storage and handling of liquefied petroleum gas, ANSI/NFPA 58. Your local library or fire department should have this book.

Storage of an appliance indoors is permissible only if the cylinder is disconnected and removed from the appliance. A cylinder must be stored outdoors in a well-ventilated area out of the reach of children. A disconnected cylinder must have dust caps tightly installed and must not be stored in a building, garage or any other enclosed area. The maximum inlet gas supply pressure: 250 psi, the minimum inlet gas supply pressure: 5 psi.

The minimum hourly of 10,000 BTU is required input rating for a fire pit for automatic operation at ratings less than full input rating. Use only the pressure regulator and hose assembly supplied with the appliance.

The installation must conform with local codes, or in the absence of local codes, with National Fuel Gas Code, ANSI Z223.1/NFPA 54, Natural Gas and Propane Installation Code, CSA B 149.1, or Propane Storage and Handling Code, B149.2.

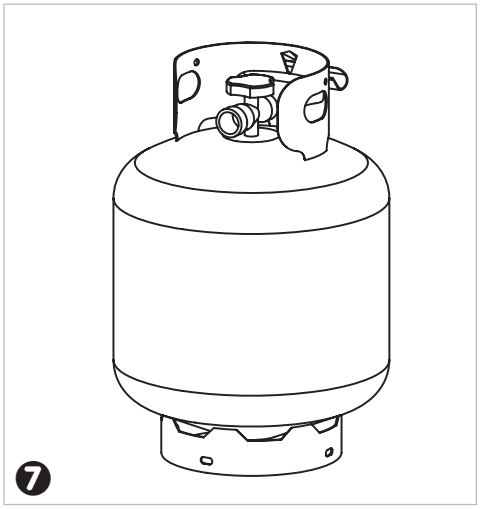

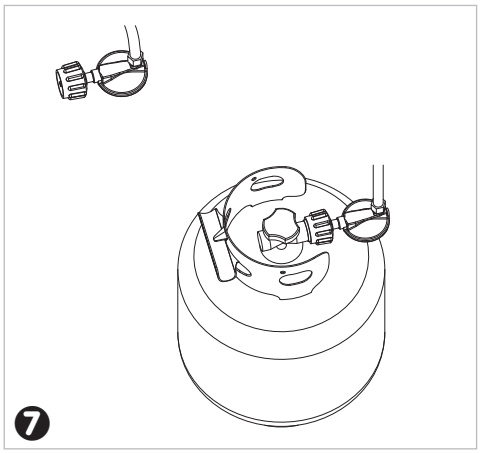

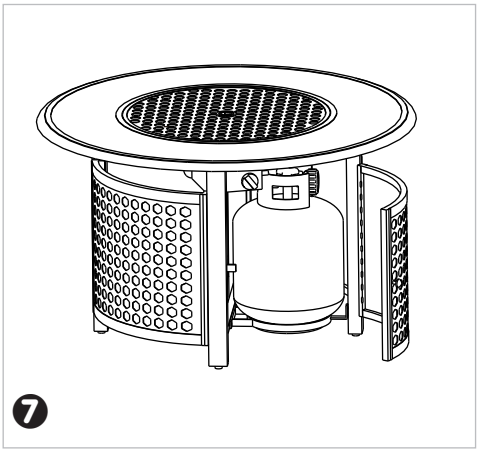

A dented, rusted or damaged propane cylinder may be hazardous and should be checked by your cylinder supplier. Never use a propane cylinder with a damaged valve connection.

The propane cylinder must be constructed and marked in accordance with the specifications for LP gas cylinders of the U.S. Department of Transportation (DOT) or the standard for cylinders, spheres and tubes for transportation of dangerous goods and commission, CAN/CSA-B339.

The cylinder must have a listed overfilling prevention device.

The cylinder used must include a collar to protect the cylinder valve.

Never connect an unregulated propane cylinder to the fire pit.

Attach regulator to cylinder. Complete attachment. Install cylinder.

- Do not store a spare LP gas cylinder under or near this appliance;
- Never fill the cylinder beyond 80 percent full;
- Place the dust cap on the cylinder valve outlet whenever the cylinder is not in use. Only install the type of dust cap on the cylinder valve that is provided with the cylinder valve. Other type of caps or plugs may result in leakage of propane.

ATTENTION: THIS PRODUCT IS NOT FOR COMMERCIAL USE. IT IS INTENDED FOR RESIDENTIAL USE ONLY.

- **Do not sit or stand on this table.**
- **Keep children away during assembly. This item contains small parts which can be swallowed by children.**
- **Do not use indoors or inside any enclosure.**
- **Retain the assembly instructions for future reference.**
- **Installer — please leave these instructions with the owner.**

LEAK CHECK

⚠ WARNING!

- Perform all leak tests outdoors.
- Extinguish all open flames
- NEVER leak test when smoking.
- Do not use the fire pit until all connections have been leak tested and do not leak.

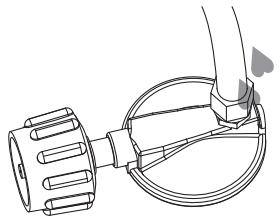

Hose / Regulator Connection

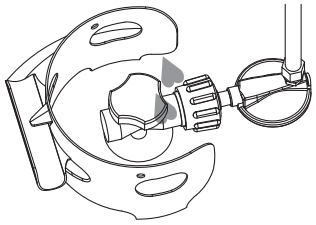

Regulator / Cylinder Connection

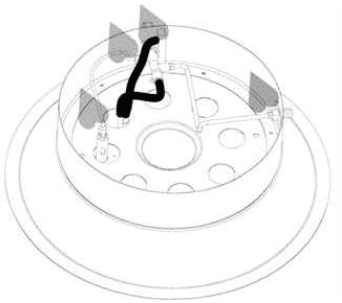

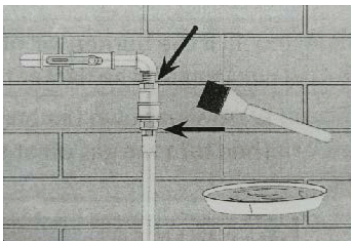

1. Make 2-3 oz. of leak test solution (one part liquid dishwashing detergent and three parts water).
2. Apply several drops of solution where hose attaches to regulator.
3. Apply several drops of solution where regulator connects to cylinder.
4. Make sure all valves are turned OFF.
5. Turn cylinder valve ON.

If bubbles appear at any connection there is a leak.

1. Turn cylinder valve OFF.
2. If leak is at hose/regulator connection: tighten connection and perform another leak test. If bubbles continue appearing, the hose should be returned to the place of purchase.
3. If leak is at regulatory/cylinder valve connection: disconnect, reconnect, and perform another leak test. If you continue to see bubbles after several attempts, cylinder valve is defective and should be returned to cylinder's place of purchase.

If NO bubbles appear at any connection, the connections are secure.

NOTE: Whenever gas connections are loosened or removed, you must perform a complete leak test. Complete installation.

CAUTION
Do not attempt to operate until you have read and understand all General Safety Information in this manual and all assembly is complete and leak test has been performed.

WARNING

Very hot while in operation!
Never lean over the fire pit while in use. Do not touch Table Top or burner Assembly while the fire pit is in operation. Wait until the fire pit has cooled down after use before placing lid on Table Top or touching any surfaces. Failure to comply with these instructions may result in serious bodily injury.

DANGER!
FOR OUTDOOR USE ONLY

CARBON MONOXIDE HAZARD
Never use this inside a house, or other unventilated or enclosed areas. This fire pit consumes air (oxygen). Do not use in unventilated or enclosed areas to avoid endangering your life.

BEFORE TURNING GAS SUPPLY ON:

1. Your fire pit was designed and approved for outdoor use only. Do NOT use it inside a building, garage, or any other enclosed area.
2. Make sure surrounding areas are free of combustible materials, gasoline, and other flammable vapors or liquids.
3. Ensure that there is no obstruction to air ventilation. Be sure all gas connections are tight and there are no leaks.
4. Be sure the cylinder is clear of debris. Be sure any component removed during assembly or servicing is replaced and fastened prior to starting.

WHEN FIRE PIT IS ON:
Burner will display tongues of blue and yellow flame. These flames should not produce thick black smoke, indicating an obstruction of airflow through the burners. If excessive flame is detected, turn off fire pit and consult the "Troubleshooting" section of this manual.

BEFORE LIGHTING

1. Fire pit should be thoroughly inspected before each use, and by a qualified service person at least annually. If relighting a hot fire pit, always wait at least 5 minutes.
2. Inspect the hose assembly for evidence of excessive abrasion, cuts, or wear. Suspected areas should be leak tested. If the hose leaks, it must be replaced prior to operation. Only use the replacement hose assembly specified by manufacturer.

LIGHTING:

1. Turn the control knob to "OFF" position (Fig. A).
2. Fully open LP cylinder valve. **Note: For initial start or after any cylinder change, hold Control Knob IN for 2 minutes to purge air from gas lines before proceeding.**
3. Push in and turn the control knob counter clockwise to HIGH (Fig. B).
4. While holding control knob in, push the RED igniter button to ignite the main burner. Press repeatedly if necessary until the burner lights.
5. After fire pit lights, release control knob. To decrease the flame, turn the control knob counter clockwise to LOW (Fig. C).
6. To increase the flame, turn the control knob clockwise to HIGH (Fig. B).

NOTE: If burner fails to remain lit, close all valves and wait at least 5 minutes before attempting to light.

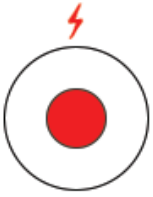

Igniter

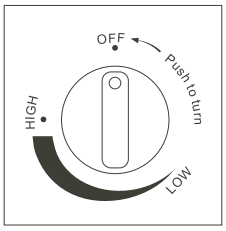

Figure A

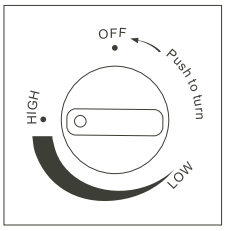

Figure B

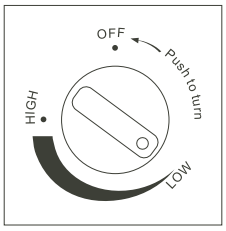

Figure C

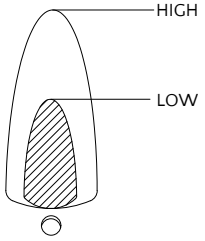

OPERATION CHECKlIST :

For a safe and pleasant heating experience, perform this check before each use:

bEFORE OPERATING:

- ❍ I am familiar with entire owner's manual and understand all precautions noted.
- ❍ All components are properly assembled, intact, and operable.
- ❍ No alterations have been made.
- ❍ All gas connections are secure and do not leak.
- ❍ Wind velocity is below 10mph.
- ❍ I understand the unit will operate at reduced efficiency below 40°F.
- ❍ I understand the fire pit is for outdoor use (outside any enclosure).
- ❍ There is adequate fresh air ventilation.
- ❍ Fire pit is away from gasoline and other flammable liquids or vapors.
- ❍ Fire pit is away from windows, air intake openings, sprinklers, and other water sources.
- ❍ Fire pit is at least two (2) feet on all sides/front/back and six (6) feet overhead from combustible materials.
- ❍ Fire pit is on a hard and level surface.
- ❍ There are no signs of spider/insect nests in fire pit orifices.
- ❍ All burner passages are clear.
- ❍ All air circulation passages are clear.
- ❍ I understand children and adults should be alerted to the hazard of high surface temperatures and should stay away to avoid burns or clothing ignition.
- ❍ I understand young children should be carefully supervised when they are in the area of the fire pit.
- ❍ I understand clothing or other fabric material should not be hung from the fire pit or placed on or near the fire pit.
- ❍ I understand that any guard or other protective device removed for servicing the fire pit must be replaced prior to operating the fire pit.
- ❍ I understand installation and repair should be done by a qualified service person, and that the fire pit should be inspected before each use and at least annually by a qualified service person.
- ❍ I understand that more frequent cleaning may be required as necessary and that it is imperative that the control compartment, burner, and circulating air passageways of the fire pit be kept clean.
- ❍ The fire pit is constructed of aluminum, a relatively soft/flexible metal, and I should not allow anyone to sit or lean heavily on the top of the fire pit, which can cause bending or warping.

WARNING

FOR YOUR SAFETY

Be careful when attempting to manually ignite this fire pit. Holding in the control knob for more than 10 seconds before igniting the gas will cause a ball of flame upon ignition.

WARNING

FOR YOUR SAFETY

Fire pit will be hot after use. Handle with care.

WARNING

Very hot while in operation!

Never lean over the fire pit while in use. Do not touch the Burner Assembly while the fire pit is in operation. 1¥ß¼ Wait until the fire pit has cooled down after use before replacing lid on fire pit or touching any surfaces. Failure to comply with these instructions may result in serious bodily injury.

SHUT DOWN:

1. To extinguish burner depress control knob and continue to turn it clockwise to OFF.
2. Turn cylinder valve clockwise to OFF and disconnect regulator when fire pit is not in use.

AFTER OPERATION:

1. Gas control knob is in OFF position.
2. Gas tank valve is OFF.
3. Disconnect gas line.

CONVERSION TO NATURAL GAS

WARNING

Make sure all control knobs and cylinder valves are in OFF position before converting.

This appliance is portable and configured for use with Liquid Propane (LP Gas), which is delivered via removable tanks (LP tanks and their use are covered elsewhere in this manual). If a Natural Gas connection is available, the user may wish to change the gas delivery system to the more permanent Natural Gas Supply.

This appliance is certified for use with either Liquid Propane (LP Gas) or Natural Gas and comes complete with the necessary parts to convert the appliance for use with Natural Gas. A Natural Gas hose and regulator are also required and are sold separately. The conversion valves allow the use of Natural Gas without replacing the burners or entire valve system.

The process of converting the burner from Propane to Natural Gas is relatively simple and can be accomplished by any handy homeowner. We recommend, however, that a qualified gas technician do the conversion. Your warranty may be voided if the conversion is improperly completed. Please retain the parts supplied with the appliance and these instructions so the technician can do the conversion.

Orifice Chart

The different burner valves in this appliance have different BTU ratings. The holes in the orifices are drilled to different sizes so as to allow the proper amount of gas to flow through them. Please note the chart below to give an easy reference for the various orifice opening sizes for the different valves in the appliance.

Propane (Pressure 11”)		NG (Pressure 7”)	
Orifice Size	Input Rate (BTU/h)	Orifice Size	Input Rate (BTU/h)
2.37mm	50,000	3.60mm	50,000

NG Hose and Regulator Conversion

Tools Required:

- Adjustable Wrench

WARNING

Make sure all appliance components are completely cooled and gas supply is turned off and removed from the appliance prior to performing the conversion.

CONVERSION TO NATURAL GAS

⚠ **WARNING!** To avoid the possibility of burns conversion should only be done when the fire pit is completely cool. Ensure burner is turned off. Turn gas off at source and disconnect the appliance before beginning conversion.

⚠ **WARNING!** Fire Glass may have sharp edges. Wear safety glasses and gloves when handling.

⚠ **WARNING!** We recommend that the conversion be performed by a licensed gas fitter, and all connections must be leak tested prior to operating the appliance.

Your fire pit can be easily converted to Natural Gas by following these steps:

1. Remove the **Fire Glass** from the **burner**.
2. Remove the **burner** from the enclosure. Take care not to damage or kink the **Thermocouple Wire**.
3. Disconnect the **Stainless Steel Flex Connector** from the **Orifice** using (2) **Wrenches**.
4. Unscrew the **Propane Orifice** from the inside of the **burner** as illustrated.
5. Replace the **Propane Orifice** with the **Natural Gas Orifice** supplied. **Note:** The **Air Shutter** has been factory set and does not need to be adjusted.
6. Reconnect the **Stainless Steel Flex Connector** to the **Orifice** and tighten using (2) **Wrenches**.
7. Place the **burner** back into the enclosure.
8. Fill out the **Conversion Label** included with your **Conversion Kit** and apply it to the inside of the **Control Panel Access Door**.

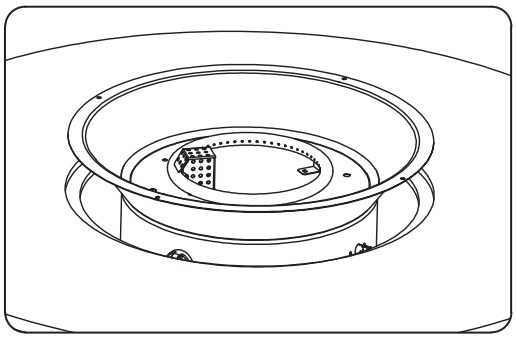

❷

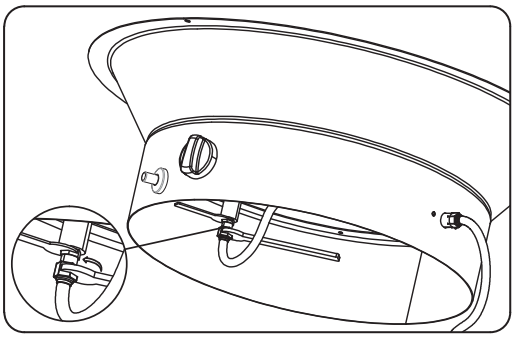

❸

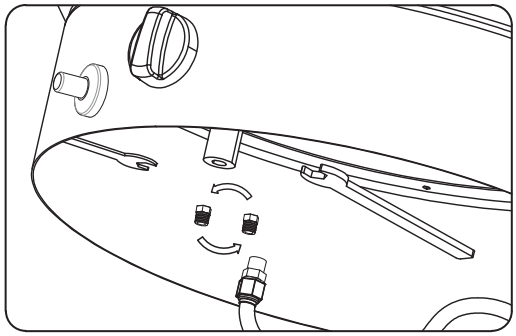

❹

ATTENTION:
This appliance can be used with LP gas and Natural gas. It is shipped from the factory adjusted for use with LP gas.
Affix this labels as close as possible to the conversion plate appliance on the appliance and on the Instruction Booklet.

This appliance was converted on_____(day/month/year) to _____ gas with kit code _____ by_____(name and address of organization making this conversion), which accepts the responsability that this conversion has been proberly made. This control has been converted for use with_____gas

Appliance model:_____ Appliance converted to:_____ **GAS** Mainfold Pressure:_____ **w.c.**

Imput rating of each man burner: see instruction booklet for details, paragraph **Adaptation to different types of gas conversicn kit code:**_____

A leak test must be performed according to the leak testing instructions found in the manual.

CONVERSION TO NATURAL GAS

Natural Gas Hook-Up

The gas appliance is designed to operate at an inlet pressure of 7 inches water column. The piping up to the appliance is the responsibility of the installer. Connect the inlet valve to rigid pipe, copper tube or an approved flexible metal connector, which complies with Z21.4/CSA 6.10. If using a gas hose (not supplied) connect the flared end of the hose to the connector on the end of the inlet valve. Tighten using two wrenches. (Do not use thread sealer/pipe dope.) Leak test all joints prior to using the appliance. Piping and valves upstream of the quick disconnect are not supplied. The gas supply pipe must be sufficiently sized to supply the BTU/h specified on the rating plate, based on the length of the piping run. The quick disconnect must not be installed in an upward direction and a readily accessible manual shut-off valve must be installed upstream of, and as close to, the quick disconnect as is feasible.

Purge the gas supply line of any trapped air prior to the first firing of the unit.

⚠ WARNING!

- The installation must be performed by a licensed gas fitter, and all connection must be leak tested before operating the appliance.
- Ensure all hose connections are tightened using two wrenches. Do not use Teflon tape or pipe dope on any hose connection.
- Ensure the hose does not contact any high temperature surfaces or it may melt and leak causing a fire.
- Locate the hose away from pathways where people may trip over it and areas where the hose may be subject to accidental damage.
- Leak test all the connections using a soap and water solution as per the leak testing instructions found in the manual.

CARE & MAINTENANCE

To enjoy years of outstanding performance from your fire pit, make sure you perform the following maintenance activities on a regular basis:

1. Use warm soapy water for cleaning. Never use flammable or corrosive cleaning agents.
2. While cleaning your unit, be sure to keep the area around the burner and control compartment dry at all times. Do not submerge the control valve assembly. If the gas control is submerged in water, do NOT use it. It must be replaced. Make sure fire pit has cooled completely before cleaning or covering with a cover.
   A. Keep the appliance area clear and free from combustible materials, gasoline and other flammable vapors and liquids.
   B. Do not obstruct the flow of combustion and ventilation air.
   C. Keep the ventilation opening(s) of the cylinder enclosure free and clear from debris.
3. Air flow must be unobstructed. Keep controls, burner, and circulating air passageways clean. Signs of possible blockage include:
   - Gas odor with extreme yellow tipping of flame.
   - Fire pit does NOT reach the desired temperature.
   - Fire pit glow is excessively uneven.
   - Fire pit makes popping noise.
   - Spiders and insects can nest in burner or orifices. This dangerous condition can damage fire pit and render it unsafe for use. Clean burner holes by using a heavy-duty pipe cleaner. Compressed air may help clear away smaller particles.
   - Carbon deposits may create a fire hazard. Clean burner screen with warm soapy water if any carbon deposits develop.

Note: in a salt-air environment (such as near an ocean), corrosion occurs more quickly than usual. Frequently check for corroded areas and repair promptly.

SERVICE:
Only a qualified service person should repair gas passages and associated components.

WARNING

FOR YOUR SAFETY
- Do NOT touch or move fire pit for at least 45 minutes after use.
- Burner is hot to the touch.
- Allow burner to cool before touching.

STORAGE:

Between uses:
- Turn control knob OFF.
- Disconnect LP source.
- Store fire pit in an area sheltered from direct contact with inclement weather (such as rain, sleet, hail, snow, dust and debris).
- If desired, cover fire pit to protect exterior surfaces and to help prevent build-up in air passages.

During periods of extended inactivity or when transporting:
- Turn control knob OFF.
- Disconnect LP source and move to a secure, well-ventilated location outdoors.
- Store fire pit in an area sheltered from direct contact with inclement weather (such as rain, sleet, hail, snow dust and debris).
- If desired, cover fire pit to protect exterior surfaces and to help prevent build-up in air passages. Never leave LP cylinder exposed to direct sunlight or excessive heat.

  Note: Wait until fire pit is cool before covering.

Caution: *Always allow fire pit to cool before attempting service.*

TROUBLESHOOTING

PROBLEM	POSSIBLE CAUSE	CORRECTIVE ACTION
Burner will not light	Propane cylinder is frosted over	Wait until the propane cylinder warms up and becomes unfrosted
	Blockage in orifice	Clear blockage
	Control knob is not in ON position	Turn control knob to ON
Burner flame is low	Gas pressure is low	Turn cylinder valve OFF and replace cylinder
	Outdoor temperature is less than 40°F and tank is less than 1/4 full	Use a full cylinder
	Control knob fully ON	Check burner and orifices for blockage
Carbon build-up Thick Black Smoke	Dirt or film on burner screen	Clean burner screen
	Blockage in burner	Remove blockage and clean burner screen inside and outside.

LIMITED WARRANTY

Customers in the Contiguous US

This product is warranted for a period of 1 year from original purchase date against defects in materials and workmanship under normal use. This warranty does NOT cover normal wear/weathering, exposure to water, freezing temperatures, oils, fluids, or chemicals, OR use in a commercial application if model is not designated as a commercial model. At Well Traveled Living's sole discretion, products under warranty will be repaired and/or replaced at no charge to the customer. Returns sent back to Well Traveled Living must be sent via prepaid freight in the original retail packaging.

For warranty service, contact Well Traveled Living at the address, phone numbers or website and email listed in this owner's manual. Be sure to have your sales receipt, date of purchase and catalogue/model numbers available when calling. All warranty service will be coordinated by Well Traveled Living's, Amelia Island, Florida service center. This warranty is extended only to the original owner. Proof of purchase will be required before warranty service is rendered. The sales receipt is the only valid proof of purchase. This warranty only covers failures due to defects in materials or workmanship which occur during normal use. Failures and/or damage which result from accident, negligence, misuse, abuse, neglect, mishandling, alteration or modification, failure to maintain, improper assembly or maintenance, service by unauthorized agency or use of unauthorized components or damage that is attributable to acts of God are NOT covered.

This limited warranty gives you specific legal rights and you may also have other rights which vary from jurisdiction to jurisdiction. The provisions of the United Nations Convention on Contracts for the Sales of Goods shall not apply to this limited warranty or the sale of products covered by this limited warranty.

- **THERE ARE NO EXPRESS WARRANTIES EXCEPT AS LISTED**
- **PURCHASER ASSUMES ALL RISKS IN THE ASSEMBLY AND OPERATION OF THIS UNIT**
- **FAILURE TO FOLLOW WARNINGS AND OPERATIONAL INSTRUCTIONS CONTAINED IN THIS MANUAL CAN RESULT IN SEVERE PROPERTY DAMAGE AND/OR PERSONAL INJURY**
- **IN NO EVENT WILL WELL TRAVELED LIVING, OR ITS DIRECTORS, OFFICERS OR AGENTS BE LIABLE TO THE PURCHASER OR ANY THIRD PARTY, WHETHER IN CONTRACT, IN TORT, OR ON ANY OTHER BASIS, FOR ANY INDIRECT, SPECIAL, PUNITIVE, EXEMPLARY, CONSEQUENTIAL, OR INCIDENTAL LOSS, COST, OR DAMAGE ARISING OUT OF OR IN CONNECTION WITH THE SALE, MAINTENANCE, USE, OR INABILITY TO USE THE PRODUCT, EVEN IF WELL TRAVELED LIVING OR ITS DIRECTORS, OFFICERS OR AGENTS HAVE BEEN ADVISED OF THE POSSIBILITY OF SUCH LOSSES, COSTS OR DAMAGES, OR IF SUCH LOSSES, COSTS, OR DAMAGES ARE FORESEEABLE. IN NO EVENT WILL WELL TRAVELED LIVING, OR ITS OFFICERS, DIRECTORS, OR AGENTS BE LIABLE FOR ANY DIRECT LOSSES, COSTS OR DAMAGES THAT EXCEED THE PURCHASE PRICE OF THE PRODUCT.**
- **SOME JURISDICTIONS DO NOT ALLOW THE EXCLUSION OR LIMITATION OF INCIDENTAL OR CONSEQUENTIAL DAMAGES, SO THE ABOVE LIMITATION OR EXCLUSION MAY NOT APPLY TO THE PURCHASER.**

EXTEND YOUR WARRANTY

When you purchase a Fire Sense, Patio Sense, or Avalon Home product, you have the peace of mind in knowing that it comes with a one-year warranty. Extend your warranty for ***an additional year*** when you write a review of your purchase on **www.wtliving.com** within 365 days of purchase.

Important Notice

Do NOT return to place of purchase—for customer service and warranty issues contact our Customer Service Center at **(866) 985-7877** or **cservice@welltraveled.net**, or go online and live chat at **wtliving.com**. Hours are: **9 a.m. – 6 p.m., EST, Monday – Friday**.

Distributed by:
Well Traveled Living
716 S 8th Street, Amelia Island, FL 32034
wtliving.com | cservice@welltraveled.net
(866) 985-7877

Fire Sense,® Patio Sense,® Avalon Home,® Mojave Sun,® Vulcan,® and Well Traveled Living® are registered trademarks of Well Traveled Imports, Inc.® All assembly instruction presentations are the property of Well Traveled Imports, Inc.® and are protected by U.S. copyrights and trademarks. All rights reserved.