HOME
DECORATORS
COLLECTION

Item#: 1013163207

Model#: TJ02-11V6120SG

ASSEMBLY INSTRUCTIONS

TERRYN 61 INCH VANITY

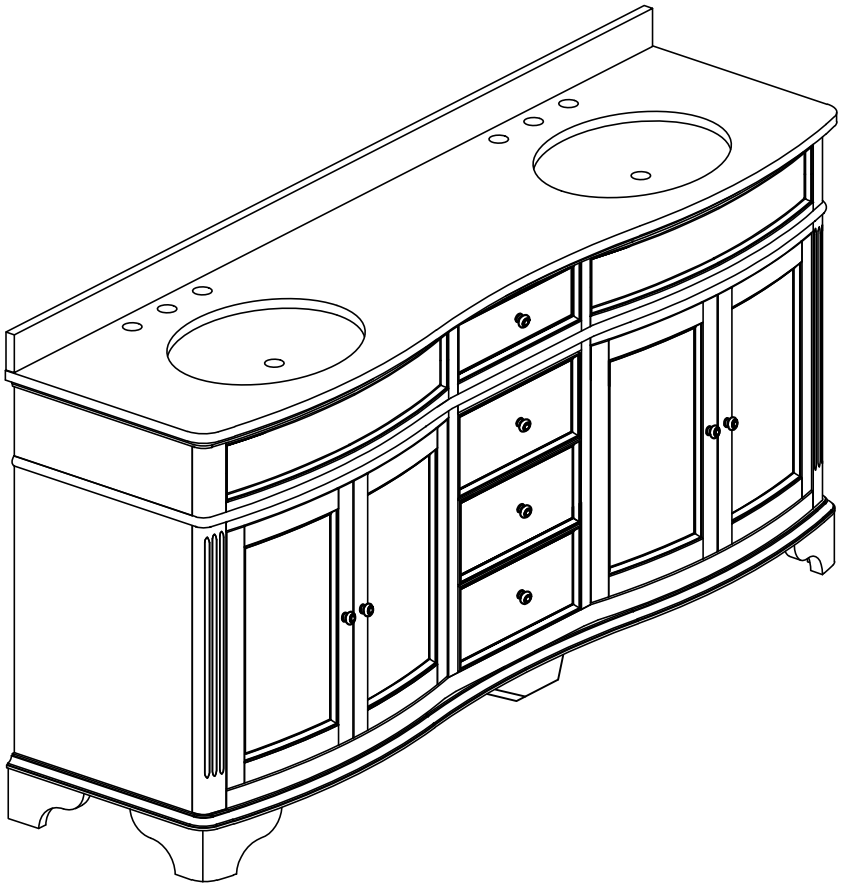

Questions, problems, missing parts? Before returning to the store,
call Home Decorators Collection Customer Service
8 a.m - 7 p.m., EST Monday- Friday, 9 a.m. 6 p.m.,EST, Saturday

1-800-998-7021

HOMEDEPOT .COM/HOMEDECORATORS

THANK YOU

We appreciate the trust and confidence you have placed in Home Decorators Collection through the purchase of this Vanity.We strive to continually create quality products designed to anhance your home. Visit us online to see our full line of products available for your home improvement needs.

Thank you for choosing Home Decorators Collection!

Table of Contents

Table of Contents.....2
Safety Information.....2
Warranty.....2
Limited lifetime Warranty.....3
What is Covered.....3
What is not Covered.....3
California and Minnesota Residents.....3
California residents.....3
Minnesota residents.....3
Pre-assembly.....4
Planning Assembly.....4
Tools Required.....4
Hardware Included.....4
Pre-assembly (continued).....5
Parts included.....5
Package Contents.....5
Assembly.....6&7&8&9&10
1 Adjusting the leveler 6
2 Adjusting the shelf.....6
3 Removing the drawers (optional).....7
4 Reinstalling the drawers (optional).....7
5 Installing the backsplash.....8
6 Aligning the doors (optional).....8&9
7 Replacing knobs (optional).....10
8 Installing the faucet.....10
Optional remove top.....11&12&13
1 Opening the doors and removing the top drawer 11
2 Taking out the top.....11&12
3 Reinstalling the existing top.....12
4 Installing the top drawer back 13
Maintenance.....14
Care and Cleaning.....14
Troubleshooting.....14

Safety Information

⚠ DANGER

- Keep small parts away from children during assembly.
- Failure to follow warning and cautions could result in serious injury.
- Product is designed to hold 290 lbs. Exceeding this limit may damage the product or cause injury to the user.
- DON'T use harsh bathroom cleaners or grout cleaners on any natural stone.

⚠ WARNING

- Read these instructions carefully and keep in a safe place.
- Adult assembly required.
- This product should only be used on flat, level surface.
- Do not over tighten connectors (screws, bolts, etc.) Overtightening can lead to product damage.
- Small parts may present choking hazard prior to assembly.
- Do not stand, step or climb on unit.

⚠ CAUTION

- USE preventative cleaning measures to keep your stone pristine.
- USE sealers according to the product specific directions.
- Blot spills quickly, and wash with mild soap and warm water.
- Stone countertops (Granite, Marble, etc.) are surprisingly resilient to stains and scratches. However, as a preventative measure, any spills on the stone surfaces should be wiped up within a reasonable amount of time. Don't let liquid sit on the stone overnight. Stones are most prone to staining by oil and acid, so be sure to blot these spills up as soon as they happen. Follow up by cleaning the stone with a mild non-abrasive soap and water.
- Be sure to check all packing materials carefully for small parts that may have come loose inside the carton during shipment. If parts are missing, contact THE HOME DEPOT to obtain any missing parts.
- Using abrasive cleansers will damage the surface.

Warranty

This warranty applies to the distributor's vanities installed for commercial and residential use. The distributor warrants that, when installed in accordance with the Recognized Plumbing Industry Practice, the vanities are free of manufacturing defects for a period of one (1) year from the date of purchase.

We guarantee your satisfaction with each vanity. Should any vanity not meet your satisfaction due to a visual defect, simply return it to your retailer with the original packaging, prior to installation, for a replacement.

This warranty applies only to the original purchaser and installation site and is not transferable.

LIMITED LIFETIME WARRANTY

WHAT IS COVERED

Home Decorators Collection products are manufactured with superior quality standards and workmanship and are backed by our limited lifetime warranty. Home Decorators Collection products are warranted to the original consumer purchaser to be free of defects in materials or workmanship. We will replace FREE OF CHARGE any product or parts that proves defective. Simply, return the product / part to any of The Home Depot retail locations or call 1-800-998-7021 to receive the replacement item. Proof of purchase (original sales receipt) from the original consumer purchaser must be made available for all Home Decorators Collection warranty claims.

WHAT IS NOT COVERED

This warranty excludes incidental/consequential damages and failures due to misuse, abuse or normal wear and tear. This warranty excludes all industrial, commercial & business usage, whose purchasers are hereby extended a five-year limited warranty from the date of purchase, with all other terms of this warranty applying except the duration of warranty. Some states and provinces do not allow the exclusion or limitation of incidental or consequential damages, so the above limitations may not apply to you. This warranty gives you specific legal rights and you may also have other rights that vary from state to state and province to province. Please see a store or contact 1-800-998-7021 for more details.

California and Minnesota Residents

CALIFORNIA RESIDENTS

⚠ **WARNING** THIS PRODUCT CAN EXPOSE YOU TO FORMALDEHYDE WHICH IS KNOWN TO THE STATE OF CALIFORNIA TO CAUSE CANCER. FOR MORE INFORMATION, GO TO WWW.P65WARNINGS.CA.GOV.

MINNESOTA RESIDENTS

"IMPORTANT HEALTH NOTICE.

SOME OF THE BUILDING MATERIALS USED IN THIS HOME (OR THESE BUILDING MATERIALS) EMIT FORMALDEHYDE. EYE, NOSE, AND THROAT IRRITATION, HEADACHE, NAUSEA AND A VARIETY OF ASTHMA-LIKE SYMPTOMS, INCLUDING SHORTNESS OF BREATH, HAVE BEEN REPORTED AS A RESULT OF FORMALDEHYDE EXPOSURE. ELDERLY PERSONS AND YOUNG CHILDREN, AS WELL AS ANYONE WITH A HISTORY OF ASTHMA, ALLERGIES, OR LUNG PROBLEMS, MAY BE AT GREATER RISK. RESEARCH IS CONTINUING ON THE POSSIBLE LONG-TERM EFFECTS OF EXPOSURE TO FORMALDEHYDE.

REDUCED VENTILATION MAY ALLOW FORMALDEHYDE AND OTHER CONTAMINANTS TO ACCUMULATE IN THE INDOOR AIR. HIGH INDOOR TEMPERATURES AND HUMIDITY RAISE FORMALDEHYDE LEVELS. WHEN A HOME IS TO BE LOCATED IN AREAS SUBJECT TO EXTREME SUMMER TEMPERATURES, AN AIR-CONDITIONING SYSTEM CAN BE USED TO CONTROL INDOOR TEMPERATURE LEVELS. OTHER MEANS OF CONTROLLED MECHANICAL VENTILATION CAN BE USED TO REDUCE LEVELS OF FORMALDEHYDE AND OTHER INDOOR AIR CONTAMINANTS.

IF YOU HAVE ANY QUESTIONS REGARDING THE HEALTH EFFECTS OF FORMALDEHYDE, CONSULT YOUR DOCTOR OR LOCAL HEALTH DEPARTMENT."

Pre-assembly

PLANNING ASSEMBLY

Check the vanity for damage before installation. If any part of the vanity is missing or damaged, contact the Customer Service Team at 1-800-998-7021.

Ensure that the vanity location is accessible to water supply and drain lines. It is recommended that you rough-in the water lines and drain before installing the vanity.

NOTE: A drain pipe and trap are not included with this vanity.

TOOLS REQUIRED

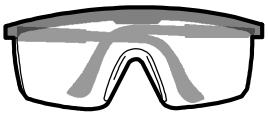

Safety goggles

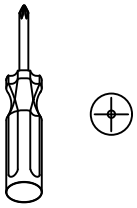

Phillips screwdriver



Level

HARDWARE INCLUDED

NOTE: Hardware not shown to actual size and pre-assembled on product.



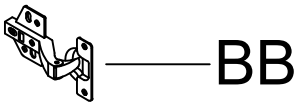

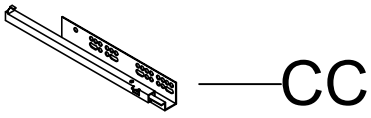

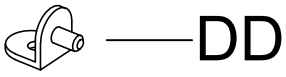

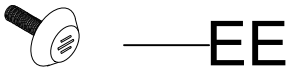

Part	Description	Quantity	Part code
AA1	Brushed gold knob (Pre-installed)	8	KN-00800360
BB	European hinge	8	EH-09001300
CC	Under mount glide	3	UG-14002300
DD	Adjust leveler	5	LV-51622020
EE	Shelf bracket	8	SB-00001300

Pre-assembly (continued)

PARTS INCLUDED

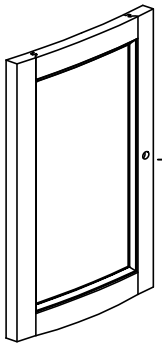

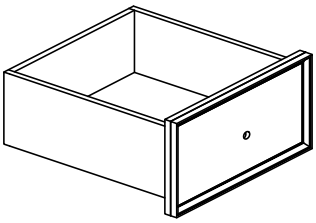

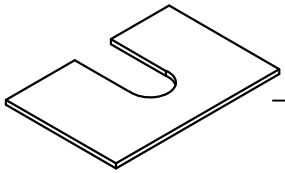

Part	Description	Quantity	Part code
C	Door	4	0211V6120SG-DO
D	Drawer	3	0211V6120SG-DR
E	Shelf	2	0211V6120SG-SH

PACKAGE CONTENTS

NOTE: Hardware not shown to actual size
There are two knob sets: One set is pre-installed, and the other with its screws are in hardware bag. Use which you prefer.



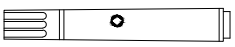

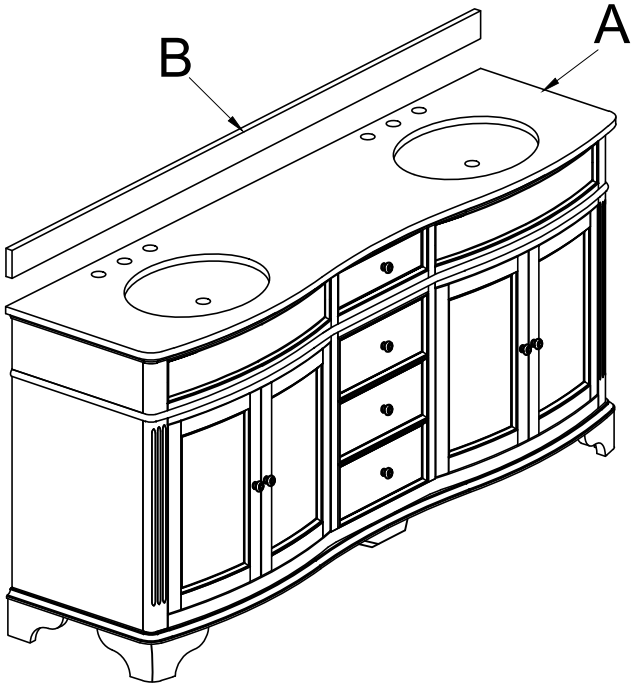

Part	Description	Quantity	Part code
A	Vanity	1	0211V6120SG-VN
B	Backsplash	1	BS-10161300
AA2	Brushed nickel knob (In hardware bag)	8	KN-00800350
FF	Touch-up pen	1	TP-11000000/W2209

Assembly

1 Adjusting the leveler

☐ Adjust the leg levelers to ensure that the vanity is even.

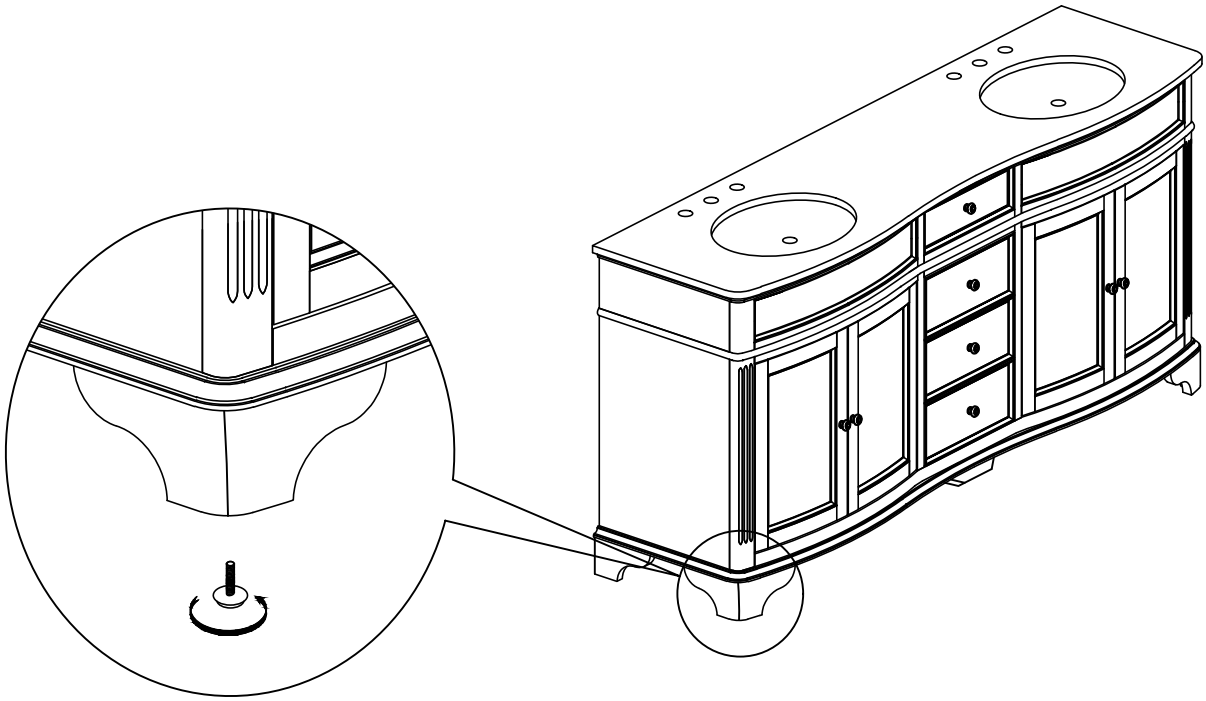

2 Adjusting the shelves

☐ Remove the shelf screws securing the shelf to the shelf bracket.

☐ Remove the shelf from the floor cabinet.

☐ Insert the shelf brackets info the desired holes. Ensure that all the shelf brackets are level.

☐ Gently insert the shelf info the vanity and secure it to the shelf brackets using the shelf screws.

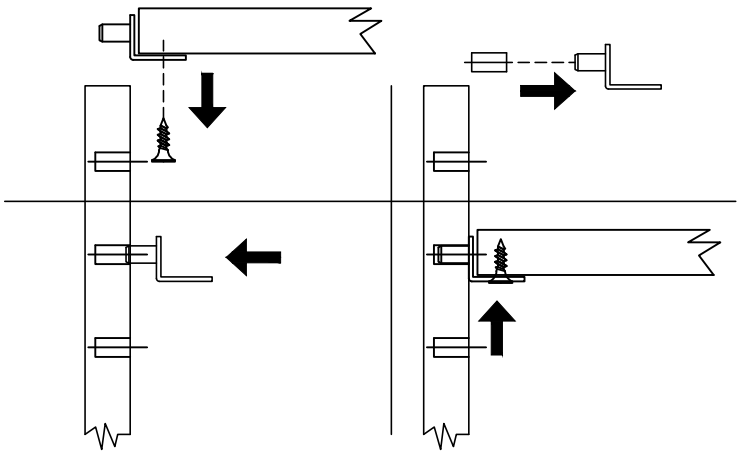

Assembly (continued)

3 Removing the drawers (optional)

- ☐ Fully extend drawers, and locate plastic levers on the metal glide tracks at left and right sides of the drawer box.
- ☐ Push on plastic levers on both sides at the same time to disengage the drawer box from the glides.
- ☐ Gently lift the drawer up to remove it from the glide tracks.

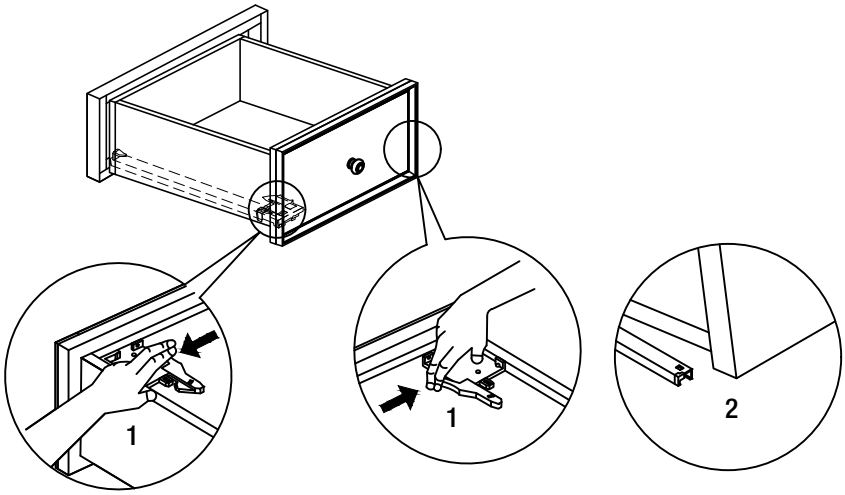

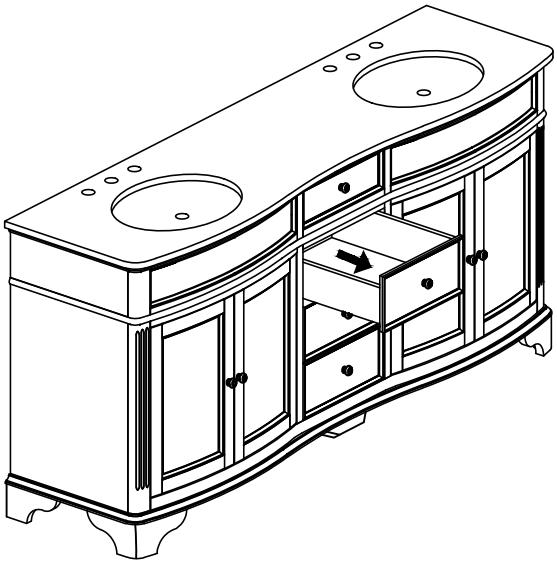

4 Reinstalling the drawers (optional)

- ☐ Fully extend the metal glide tracks, gently lower and slide the drawer box into the rear glide catch.
- ☐ Lower the drawer box down to completely rest on extended glides and push plastic levers to lock the drawer box in place.
- ☐ Spin the adjustment wheel to the left to raise the drawer box or spin the adjustment wheel to the right to lower the drawer box. You can adjust the left and right side height independently in order to find the drawer best alignment position.

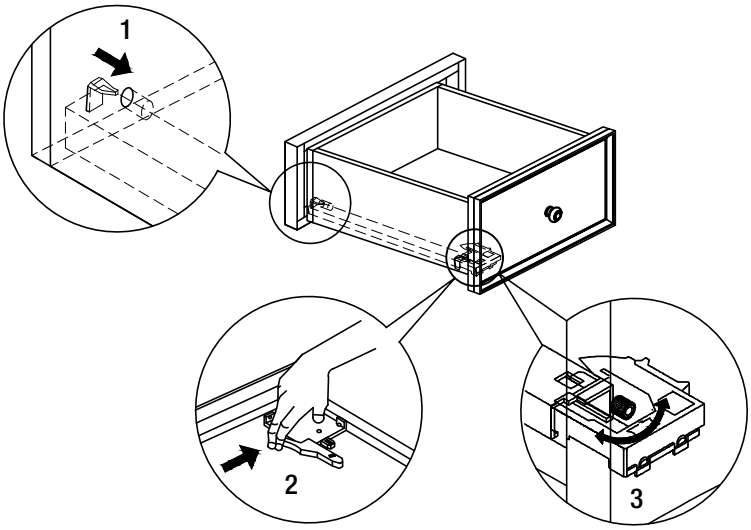

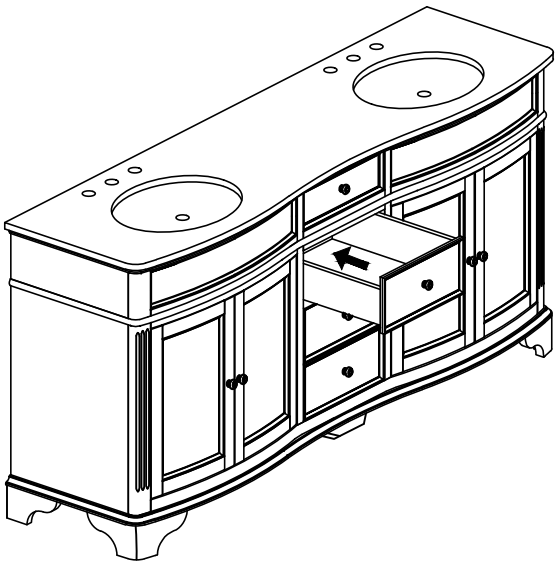

Assembly (continued)

5 Installing the backsplash

- ☐ Apply silicone to the bottom of the backsplash (B).
- ☐ Place the backsplash (B) on the vanity (A). Be sure to align the backsplash (B) with the top of the vanity (A).
- ☐ Gently remove excess glue from the connecting area.
- ☐ Let the vanity and backsplash sit for 24 hour before use.

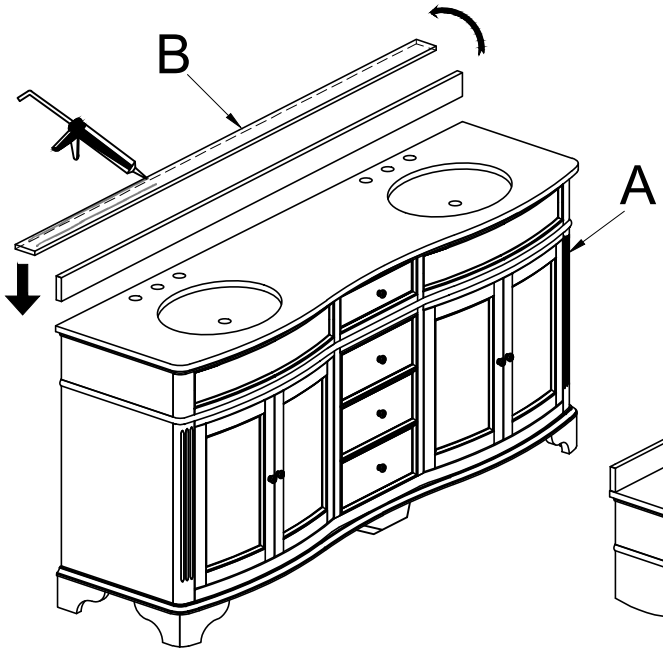

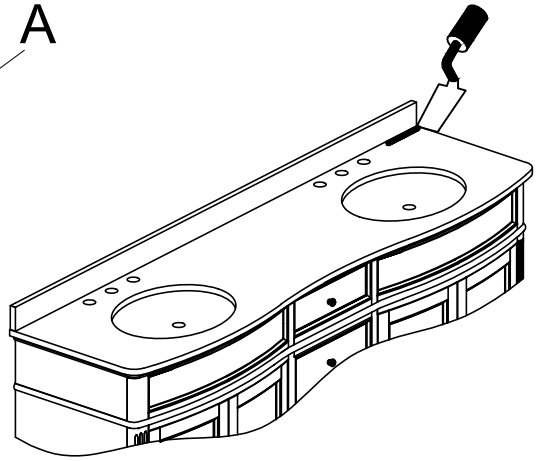



6 Aligning the doors (optional)

If you need to adjust the doors, do so in the following manner.

- ☐ To adjust the door up or down, loosen screws (a) on both hinges (1), adjust door (2), and retighten screws (3).

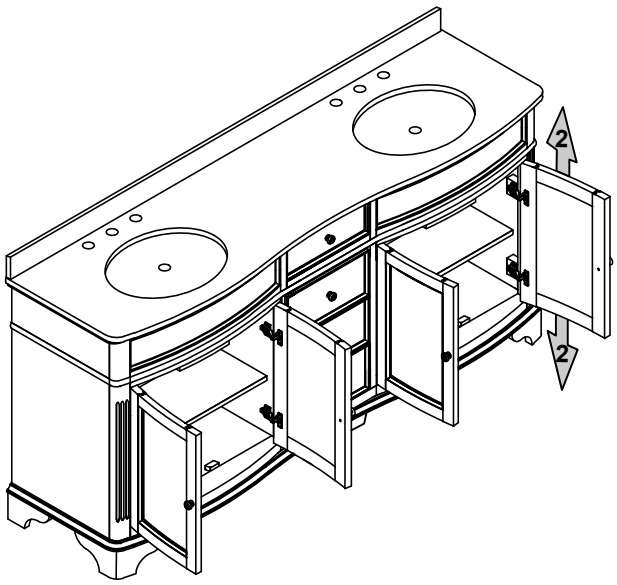

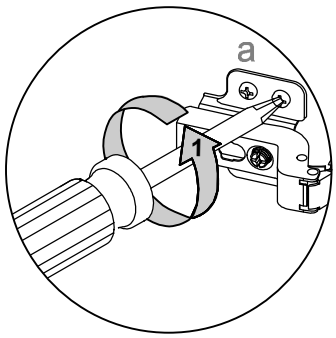

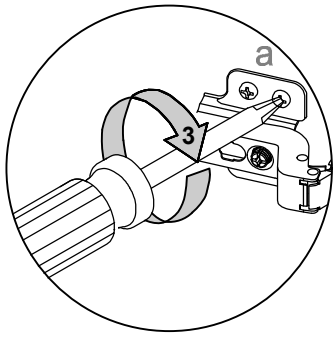

Assembly (continued)

☐ To adjust the door left or right, turn screws (b) on both hinges (1), in or out (2).

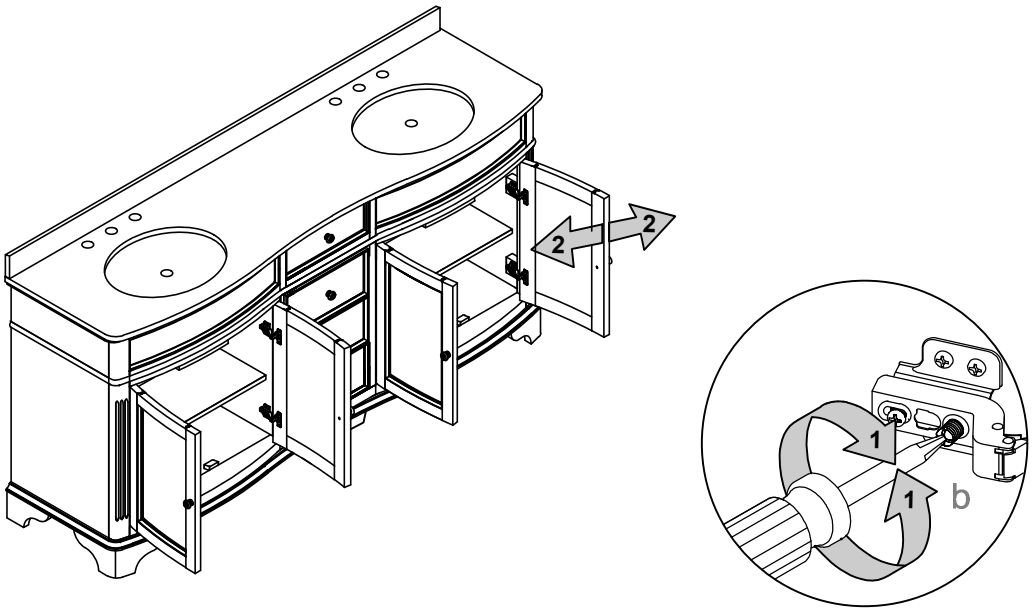

☐ To adjust the door in or out, loosen screws (C) on both hinges (1), adjust door (2), and retighten screws (3).

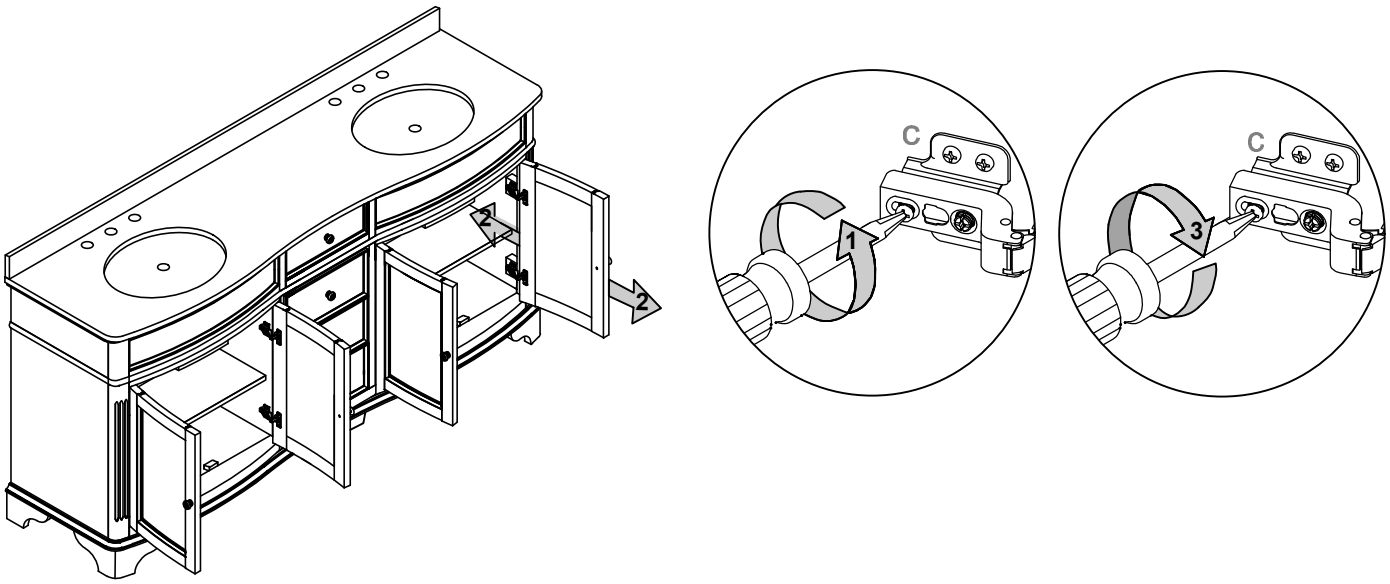

Assembly (continued)

7 Replacing knobs (optional)

- ☐ Open the doors and the drawers.
- ☐ Use a screwdriver (not provided) to unscrew the bolts of knob. Do not close the drawers and the doors unless the new knob is installed.
- ☐ Replace the knob: Secure the new knob with its own bolts.

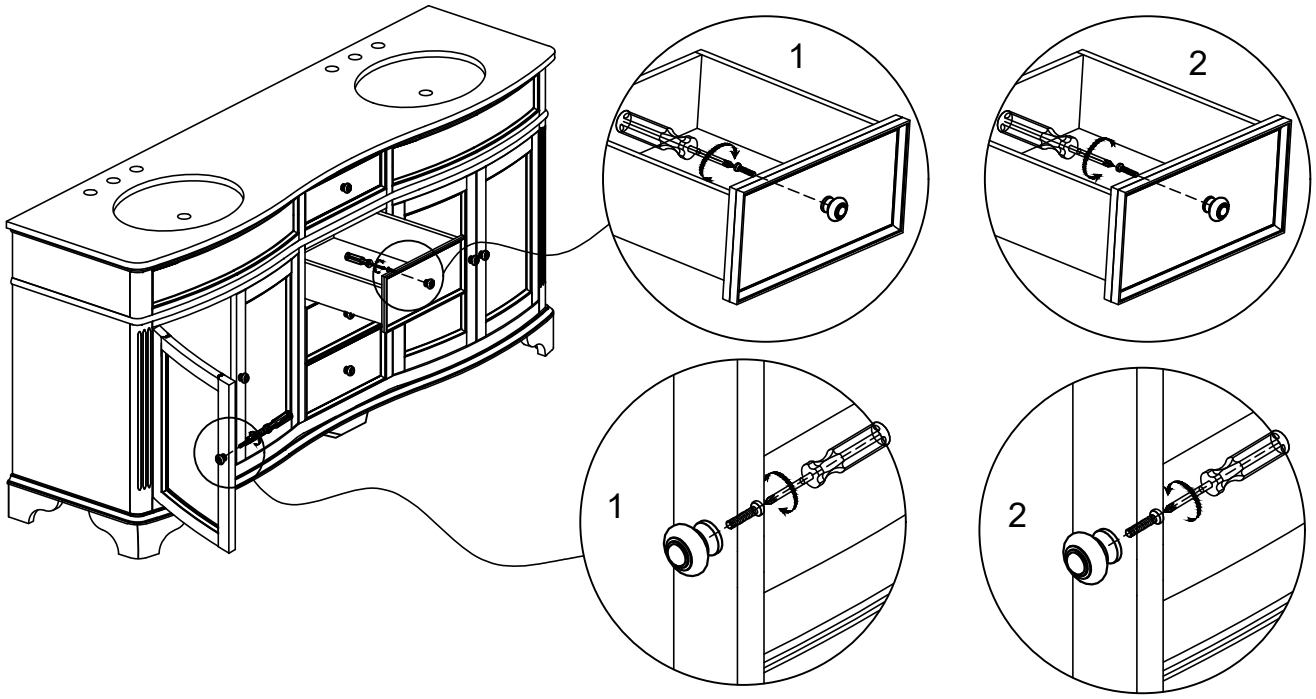

8 Installing the faucet (not included in the package)

- ☐ Make sure the thread of the faucet (L) is long enough to fix to the vanity top and connect the water system.
- ☐ Installing the faucet base on your own faucet instruction.

NOTE: A drain pipe and trap are not included with this vanity.

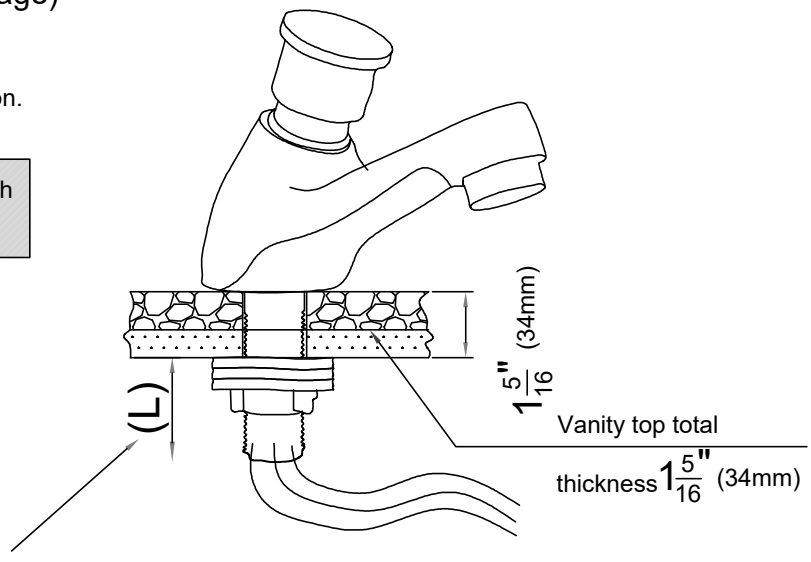

Make sure the thread of the faucet (L) is long enough to fix to the vanity top and connect the water system

Optional-Remove Top

1 Opening the doors and removing the top drawer
(Please refer the step 3 on page 7).

NOTE: When vanity top is pre-installed.

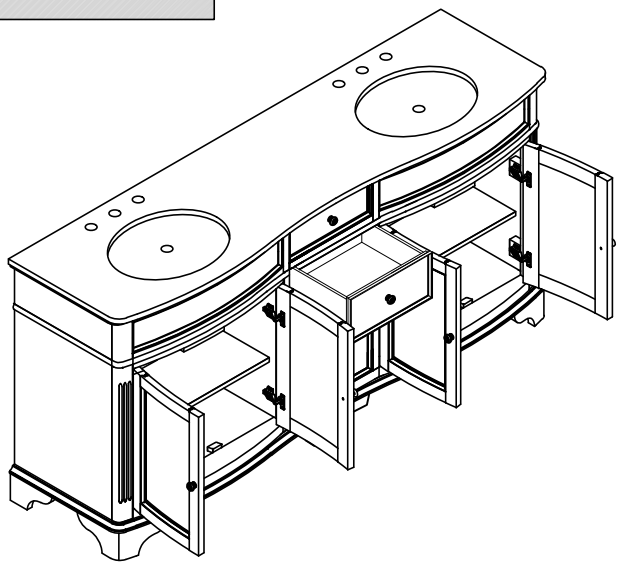

2 Taking out the top

Use a screwdriver (not provided) to unscrew the 9 screws to uninstall the top.

Screws for fixing top layout

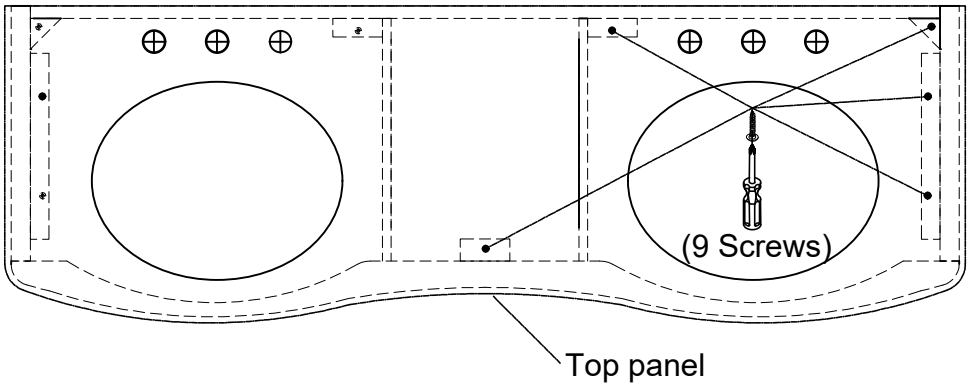

Optional-Remove Top (continued)

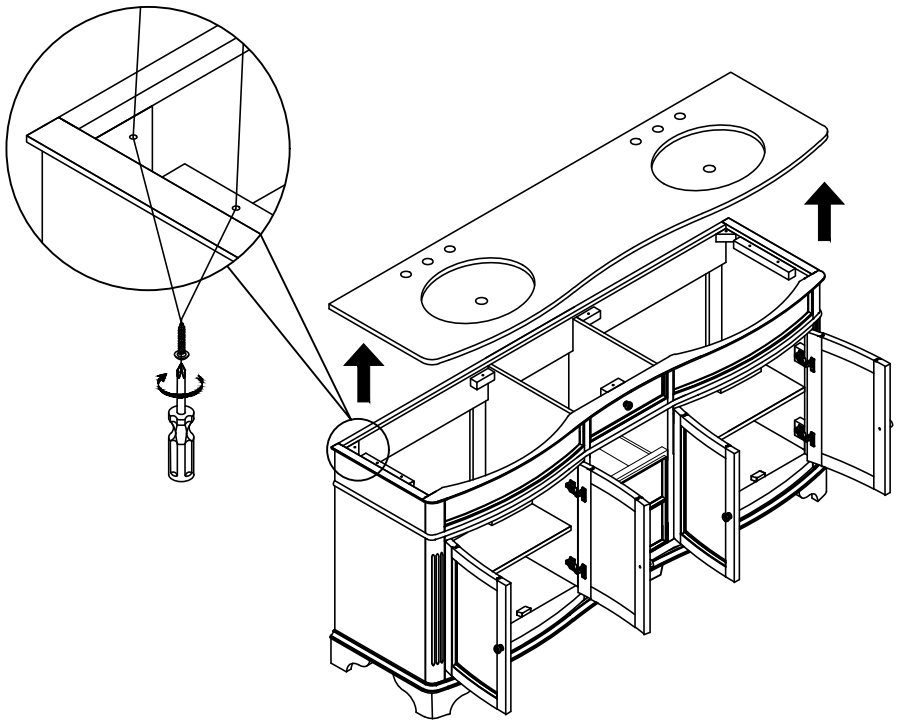

No.	Sketch	Qty
Wood Screw		9

3 Reinstalling the existing top.

- ☐ Place the top on the vanity. Make sure that it is centered on left-right and flush with the back.
- ☐ Use a screwdriver to secure the 9 wood screws.

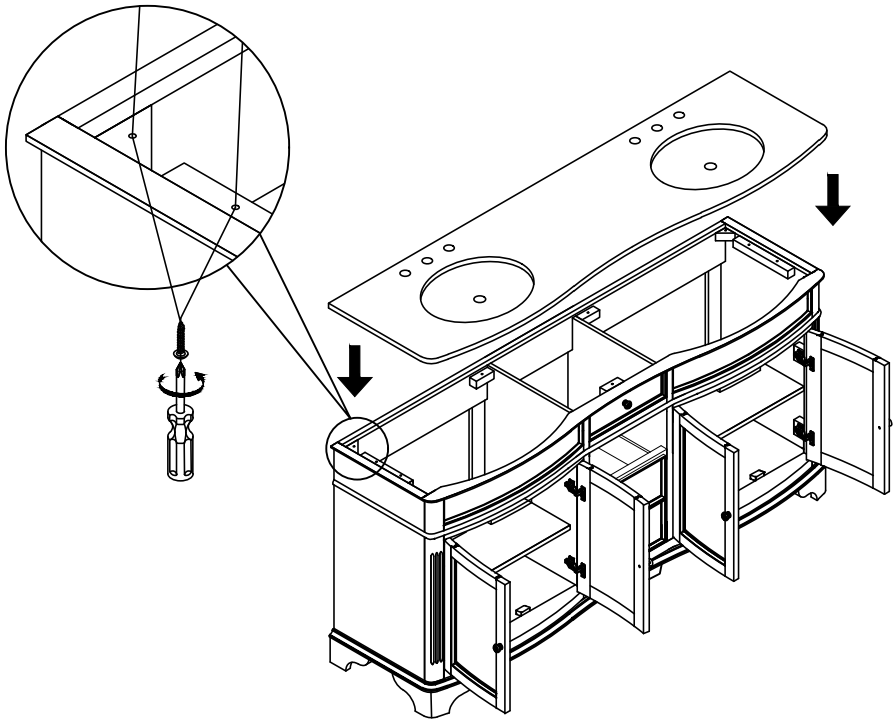

No.	Sketch	Qty
Wood Screw		9

Optional-Remove Top (continued)

4 Installing the top drawer back
(Please refer the step 4 on page 7).

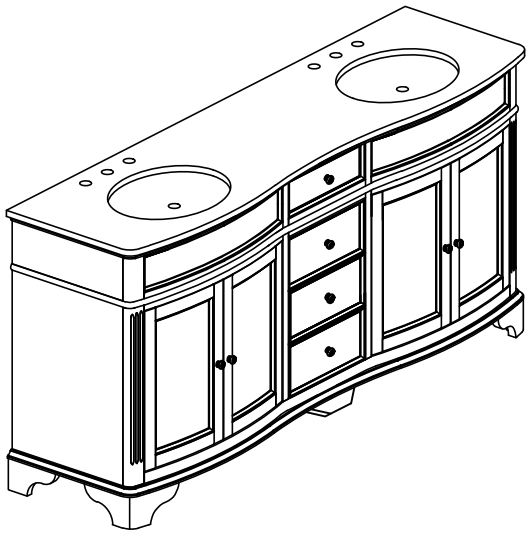

Maintenance

- ☐ In the event that your furniture is stained or otherwise damaged during use, we recommend that you call a professional to repair your furniture.
- ☐ Check bolts/screws periodically and tighten them if necessary.
- ☐ Tips for using touch-up pen (FF): For scratches, stroke in direction of scratch; for worn areas, stroke in direction of wood grain. Rub off excess colorant promptly with a soft cloth.

Care and Cleaning

- □ Rinse vanity top with clean, hot water frequently.
- □ Blot spills quickly, and wash with mild soap and warm water.
- □ Clean the surface with a glass cleaner or other household cleansers that are non-abrasive
- □ Remove oil-based stains with acetone, mineral spirits, or ammonia.
- □ Organic stains like coffee, tea, or juice can be removed with hydrogen peroxide, mixed with a few drops of ammonia.
- □ Water spots or rings can be removed by buffing the spots gently with 00-gauge steel wool.
- □ Small nicks and scratches can often be removed the same way.
- □ Larger scratches, chips, and resilient stains may require professional help. Please contact your local stonemason for details.
- □ *Use if you have Natural Stone* Your stone was sealed at the factory, but reapplication is necessary over time. How often is determined by the quality of the sealer used, and the frequency of use. We recommend using a penetrating non-toxic sealer for bath areas.

Troublesshooting

PROBLEM	POSSIBLE CAUSE	CORRECTIVE ACTION
The vanity is tilted.	The levelers are not level.	Adjust the levelers to ensure they are level.

HOME
DECORATORS
COLLECTION

Questions, problems, missing parts? Before returning to the store,
call Home Decorators Collection Customer Service
8 a.m - 7 p.m., EST Monday- Friday, 9 a.m. 6 p.m.,EST, Saturday

1-800-998-7021

HOMEDEPOT .COM/HOMEDECORATORS

Retain this manual for future use.