Wicker Sofa Set

sku:PH18-BN1/2 PH19-GY1/2 PH21-NLG1/2

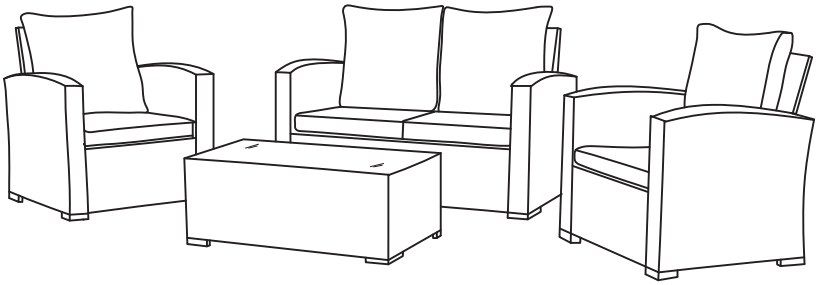

Thank you for choosing Joivi!

Our goal is to provide high quality outdoor furniture with outstanding customer service-all at an affordable price. Please let us know how we are doing!

Problems?

(Missing pieces, wrong pieces...)

We will fix it immediately. Send us an email at **help@joivi.com**.

Happy?

Please leave us a review!
You can make others happy too!



IMPORTANT, RETAIN FOR FUTURE REFERENCE: READ CAREFULLY.

Safety

- ☑ For domestic use only.
- ☑ Always use on firm level ground.
- ☑ Don't tighten all the bolts before the product is fully assembled.
- ☑ It would be useful to ask someone to help you assemble the product.
- ☑ Periodic structural checks of this product should be undertaken, do not use if you have any doubts about its fitness for purpose.
- ☑ Do not stand on the seat and table.
- ☑ Do not sit on the armrest and table.
- ☑ Do not let children play with this product.

At the beginning of the season

- ☑ Check to ensure that all components and fixings of this product are secure, do not use if you have any doubts about its fitness for purpose.

At the end of the season

- ☑ This product should be stored under cover during prolonged spells of adverse weather (wet or cold) and also during the winter (ideally in a garden shed or garage).
- ☑ Always clean and dry thoroughly before storage.

Tips for Cushions

In order to compress the package, we put the cushions in the gap of some parts. So there may be crinkle on the fabric. Don’t worry. Just flap every corner of the cushion evenly and it will get back into its original shape soon.

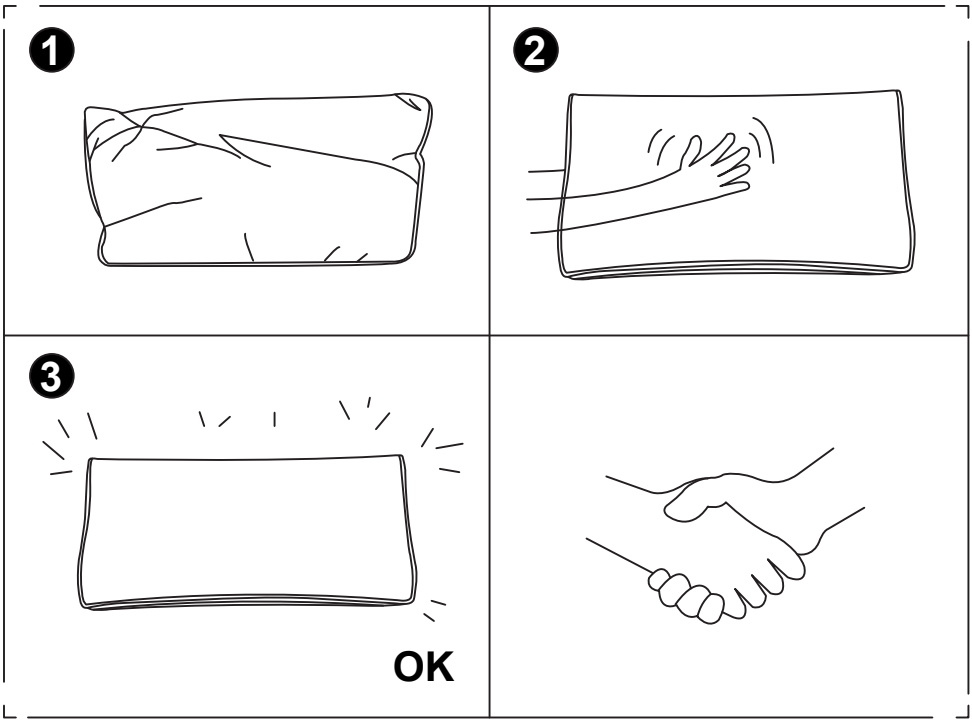

COMPONENT LIST - LOVESEAT

Item no.	Reference Image	Description	Qty.
A1	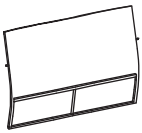	Back	1
B		Right Armrest	1
B1	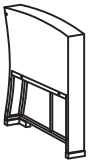	Left Armrest	1
C1		Seat Base	1
G		Side Panel	1
E	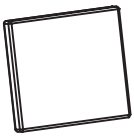	Back Cushion	2
F		Seat Cushion	2

COMPONENT LIST - LOVESEAT

Item no.	Reference Image	Description	Qty.
L1	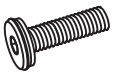	M6X35 Head Cap Screws	4
L2	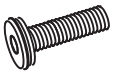	M6X30 Head Cap Screws	12
M		Washer	16
N		Allen Key	1

NOTE:
Do NOT tighten any screws fully first until you have tightened all the screws.
This may cause the frame to warp.
If there is still wobbles or screw holes cannot be aligned, loosen the screws and tighten sequentially.
If the Loveseat is not stable it could lead to damage to the product.

1

Attach the Left Armrest (B1) to the Back (A1) by securing with
M6*30 Head Cap Screws (L2) and Washers (M). Do this in 2 places.

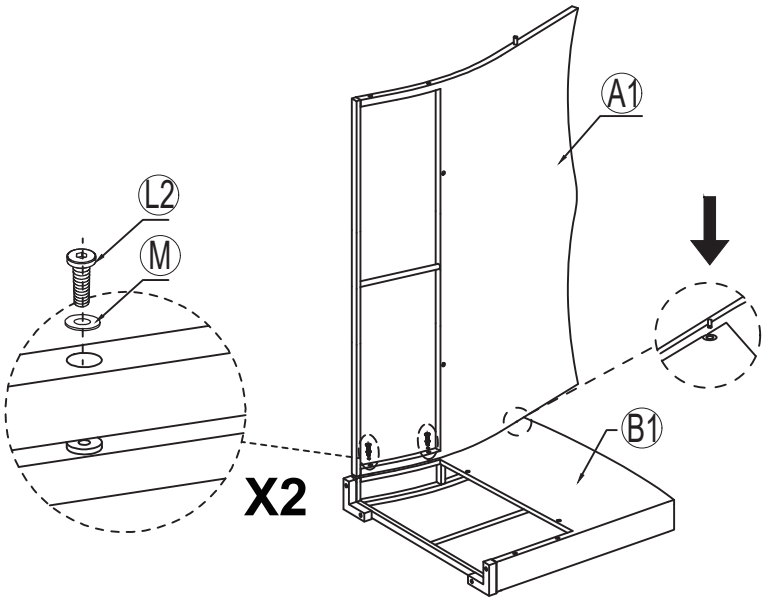

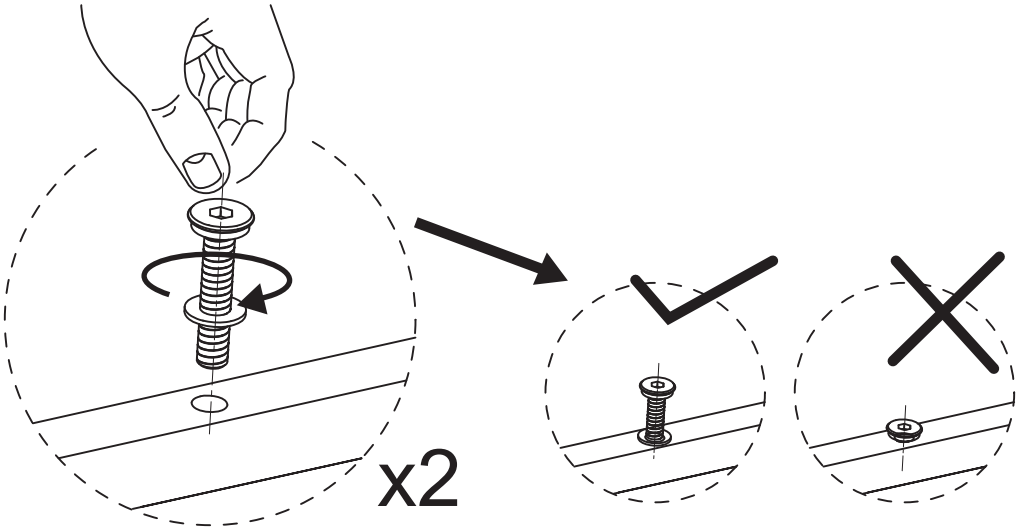

NOTE:DO NOT TIGHTEN THE SCREWS COMPLETELY.

2

Attach the Seat Base (C1) to the Left Armrest (B1) by securing with M6*30 Head Cap Screws (L2) and Washers (M). Do this in 2 places.
Attach the Seat Base (C1) to the Back (A1) by securing with M6*35 Head Cap Screws (L1) and Washers (M). Do this in 2 places.

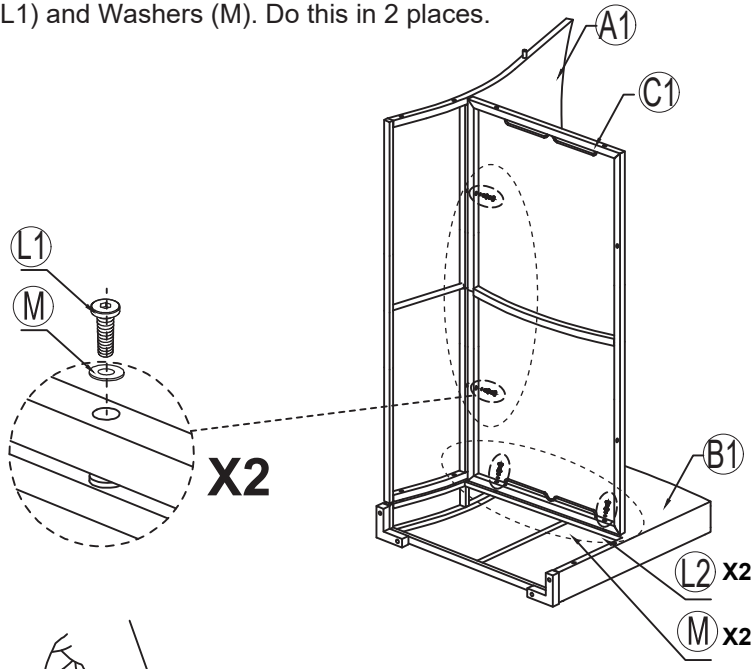

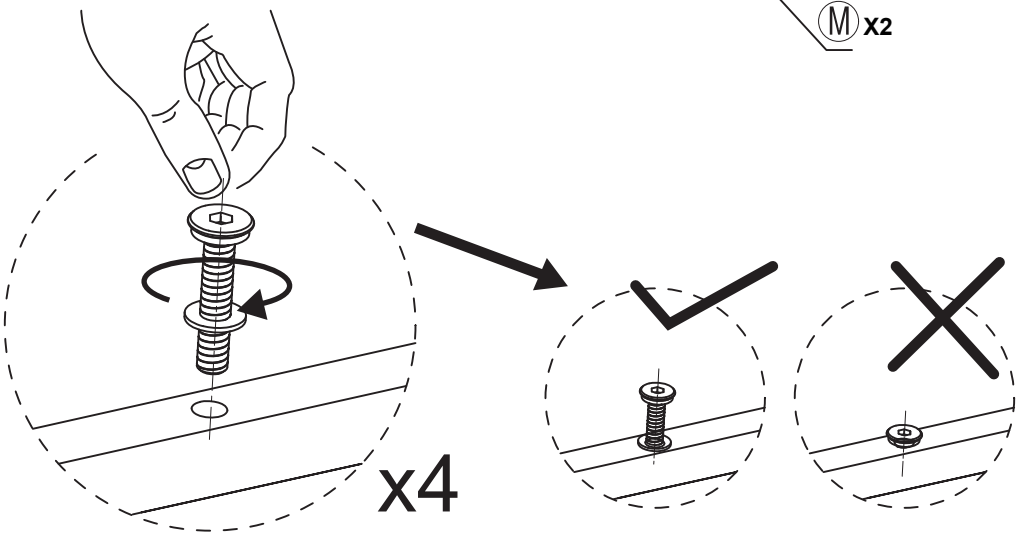

NOTE:DO NOT TIGHTEN THE SCREWS COMPLETELY.

3

Attach the Left Armrest (B1) to the Side Panel (G) by securing with M6*30 Head Cap Screws (L2) and Washers (M). Do this in 2 places.
Attach the Seat Base (C1) to the Side Panel (G) by securing with M6*35 Head Cap Screws (L1) and Washers (M). Do this in 2 places

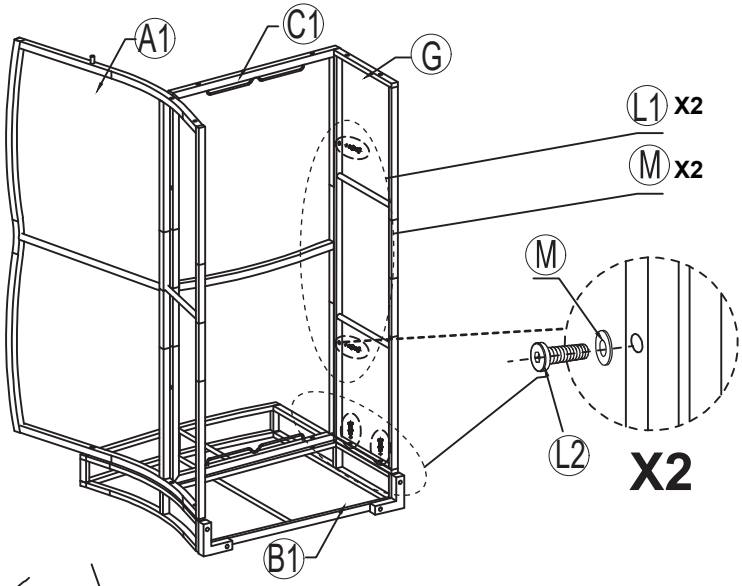

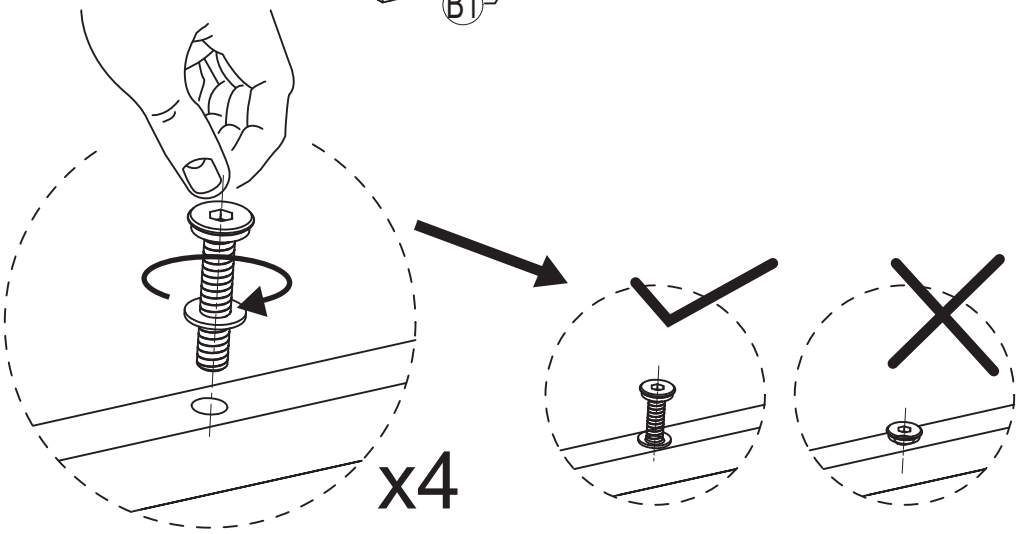

NOTE:DO NOT TIGHTEN THE SCREWS COMPLETELY.

4

Attach the Right Armrest (B) to the Back (A1) and the Seat Base (C1) and the Side Panel (G) by securing with M6*30 Head Cap Screws (L2) and Washers (M). Do this in 6 places.

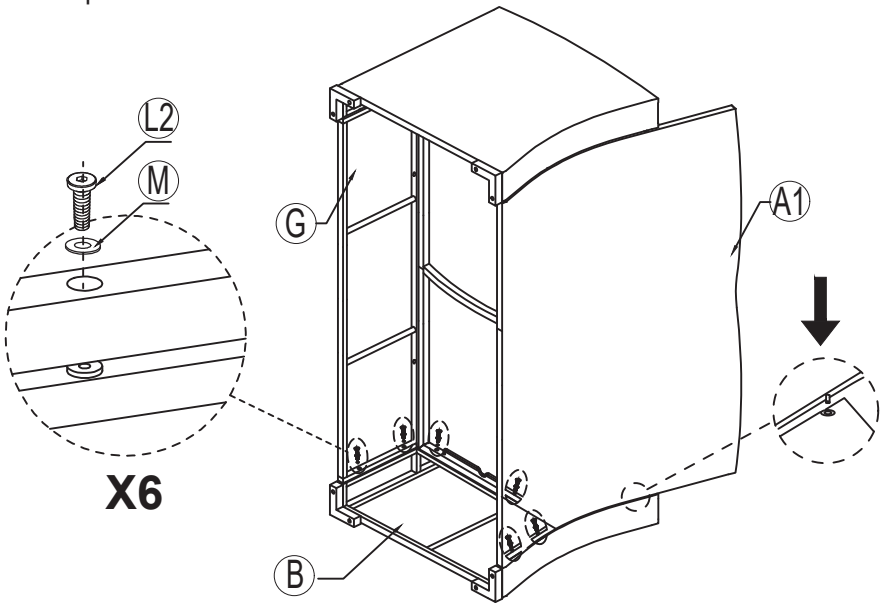

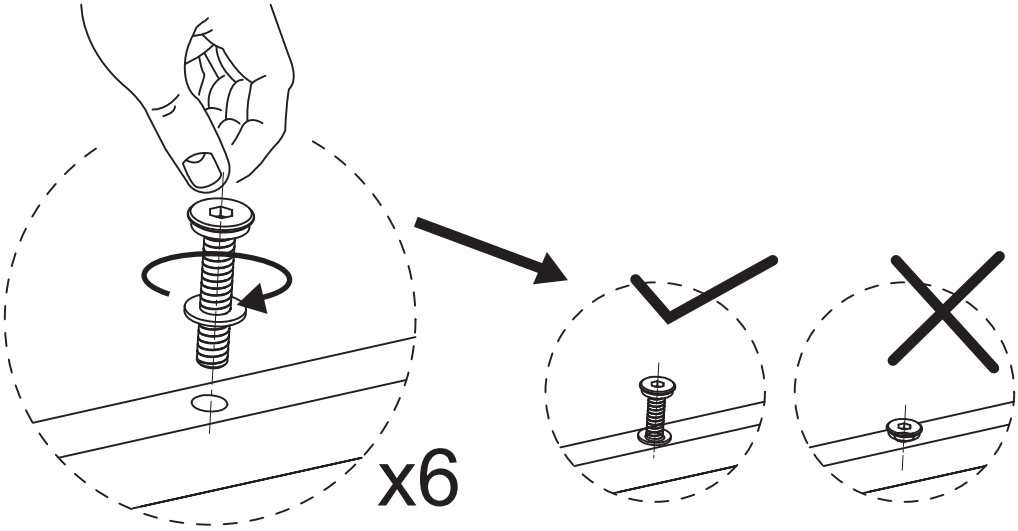

NOTE:DO NOT TIGHTEN THE SCREWS COMPLETELY.

5

Tighten all 16 Screws into place with Allen Key (N).

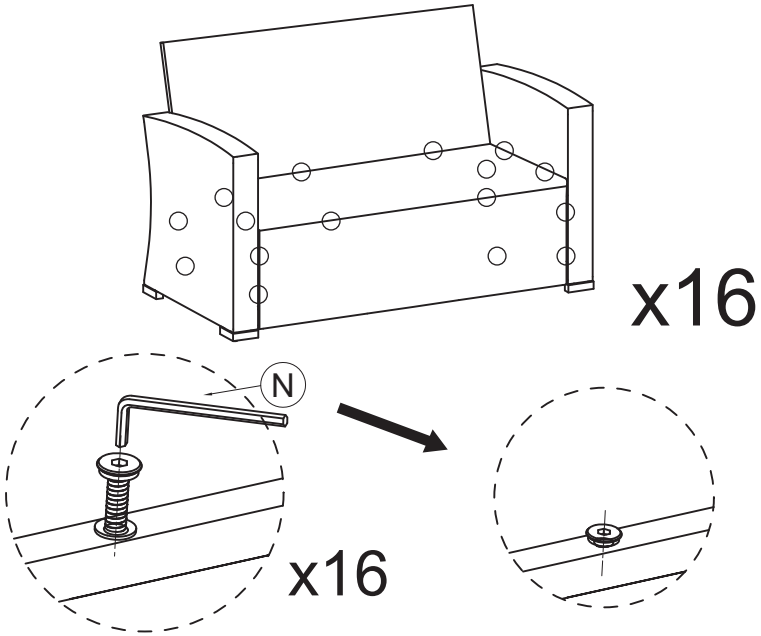

NOTE:IF ANY SCREW HOLES CANNOT BE ALIGNED, LOOSEN ALL THE SCREWS AND GO BACK STEP 1 AND RESTART ASSEMBLY.

6

Place the loveseat on a level surface.
Place Back Cushions (E)and Seat Cushions (F) on the loveseat and your loveseat is ready for use.

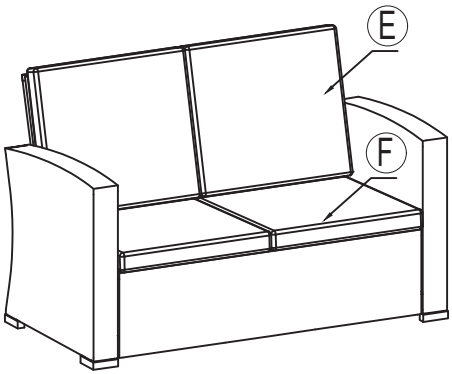

COMPONENT LIST - ARMCHAIR X 2

Item no.	Reference Image	Description	Qty.
A		Back	1
B		Right Armrest	1
B1	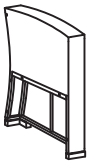	Left Armrest	1
C	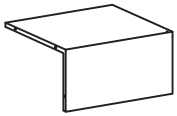	Seat Base	1
E	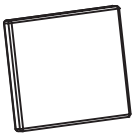	Back Cushion	1
F		Seat Cushion	1

COMPONENT LIST - ARMCHAIR X 2

Item no.	Reference Image	Description	Qty.
L1	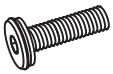	M6X35 Head Cap Screws	1
L2	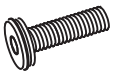	M6X30 Head Cap Screws	12
M		Washer	13
N		Allen Key	1

NOTE:
Do NOT tighten any screws fully first until you have tightened all the screws.
This may cause the frame to warp.
If there is still wobbles or screw holes cannot be aligned, loosen the screws and tighten sequentially.
If the Chair is not stable it could lead to damage to the product.

1

Attach the Left Armrest (B1) to the Back (A) by securing with
M6*30 Head Cap Screws (L2) and Washers (M). Do this in 2 places.

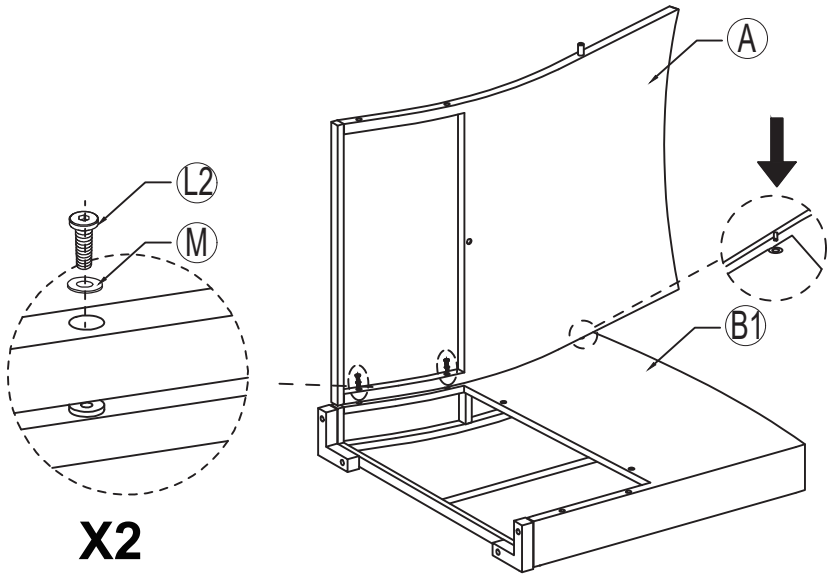

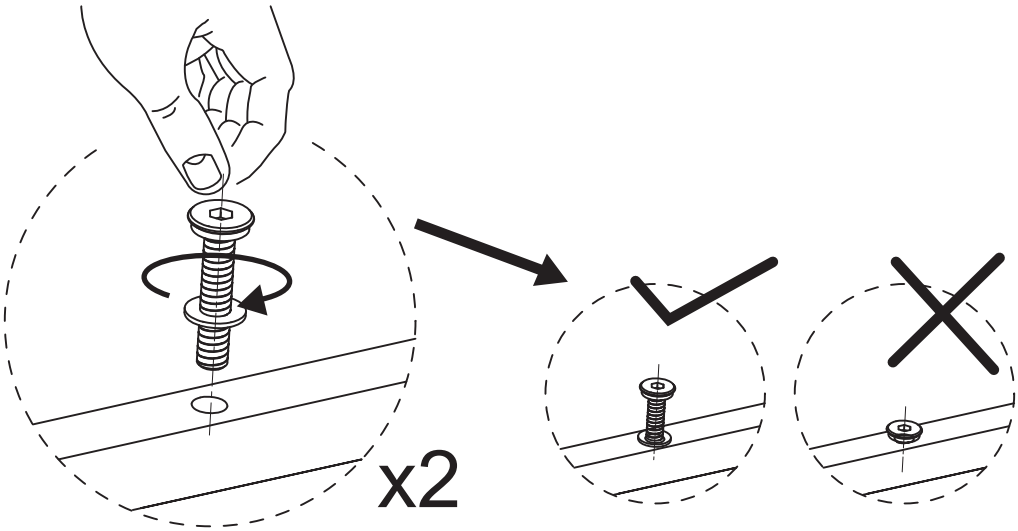

NOTE:DO NOT TIGHTEN THE SCREWS COMPLETELY.

2

Attach the Seat Base (C) to the Left Armrest (B1) by securing with M6*30 Head Cap Screws (L2) and Washers (M). Do this in 4 places.
Attach the Seat Base (C) to the Back (A) by securing with M6*35 Head Cap Screws (L1) and Washers (M). Do this in 1 place.

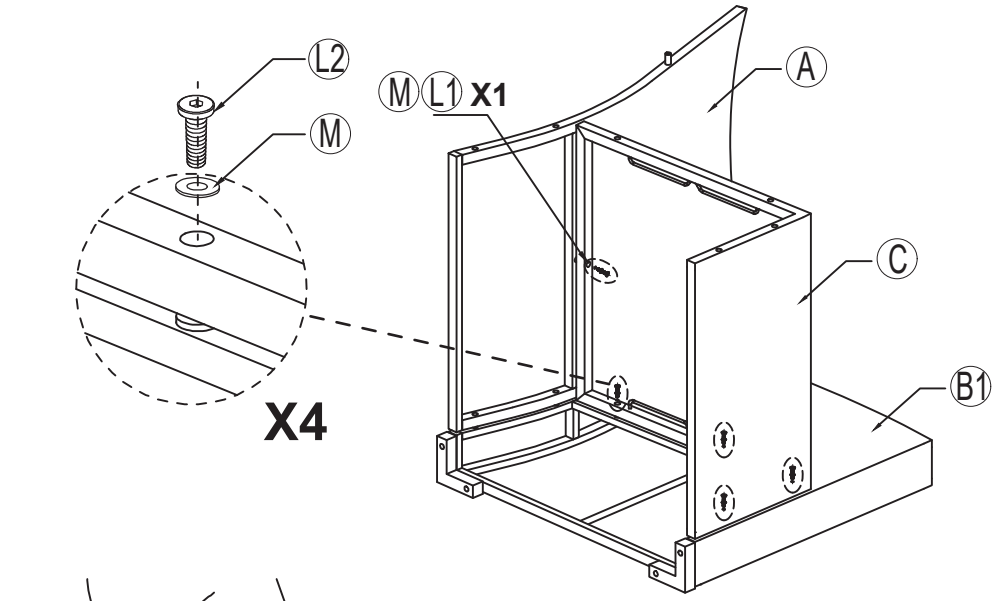

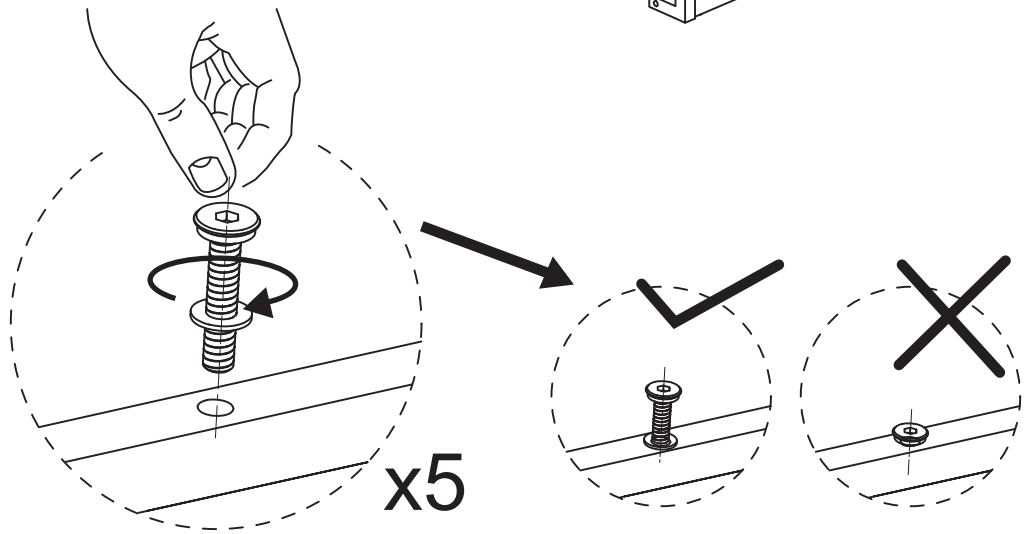

NOTE:DO NOT TIGHTEN THE SCREWS COMPLETELY.

3

Attach the Right Armrest (B) to the Back (A) and the Seat Base (C) by securing with M6*30 Head Cap Screws (L) and Washers (M). Do this in 6 places.

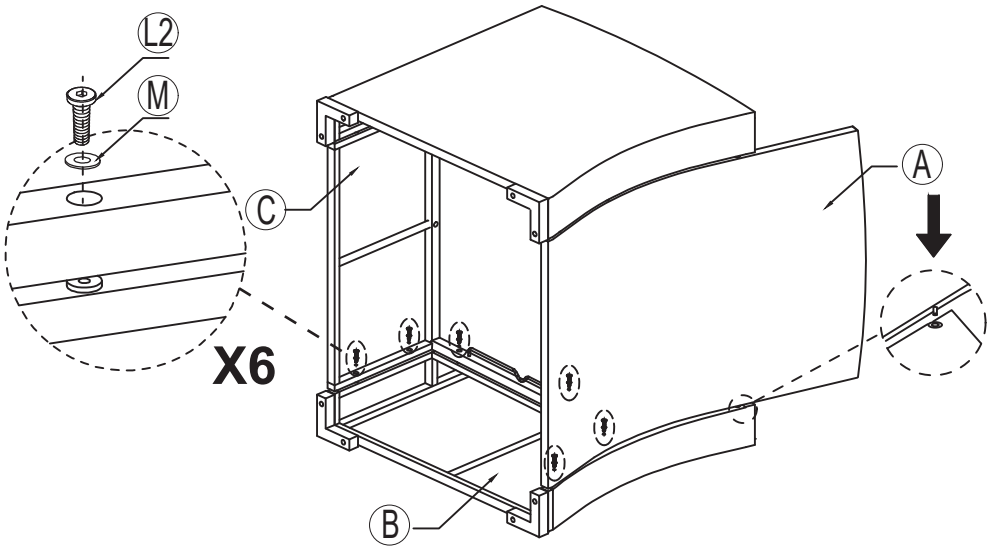

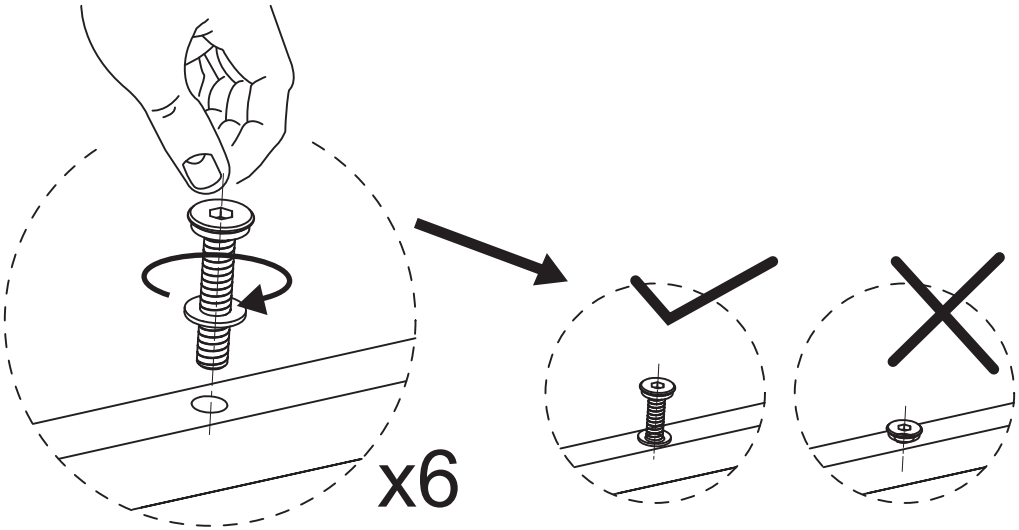

NOTE:DO NOT TIGHTEN THE SCREWS COMPLETELY.

4

Tighten all 13 Screws into place with Allen Key (N).

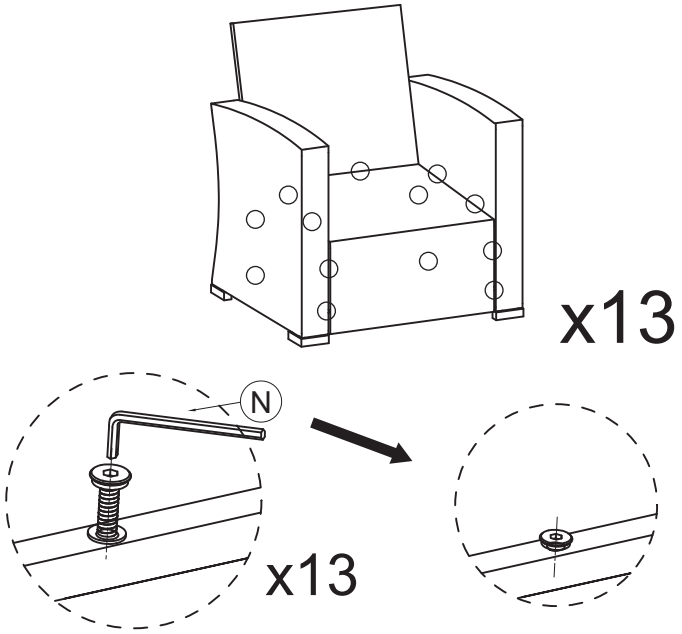

NOTE:IF ANY SCREW HOLES CANNOT BE ALIGNED, LOOSEN ALL THE SCREWS AND GO BACK STEP 1 AND RESTART ASSEMBLY.

5

Place the chair on a level surface.
Place Back Cushion (E)and Seat Cushion (F) on the chair and your chair is ready for use.

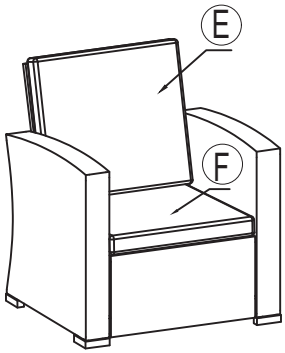

COMPONENT LIST - TABLE

Item no.	Reference Image	Description	Qty.
O	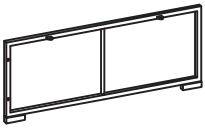	Table side Panel	2
P		Table side Panel	2
J		Table Glass	1
L1	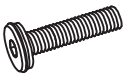	M6X35 Head Cap Screws	8
M		Washer	8
N		Allen Key	1

1

Attach the Table side Panel (O) to the Table side Panels (P) by securing with M6X35 Head Cap Screws (L1) and Washers (M). Do this in 4 places.

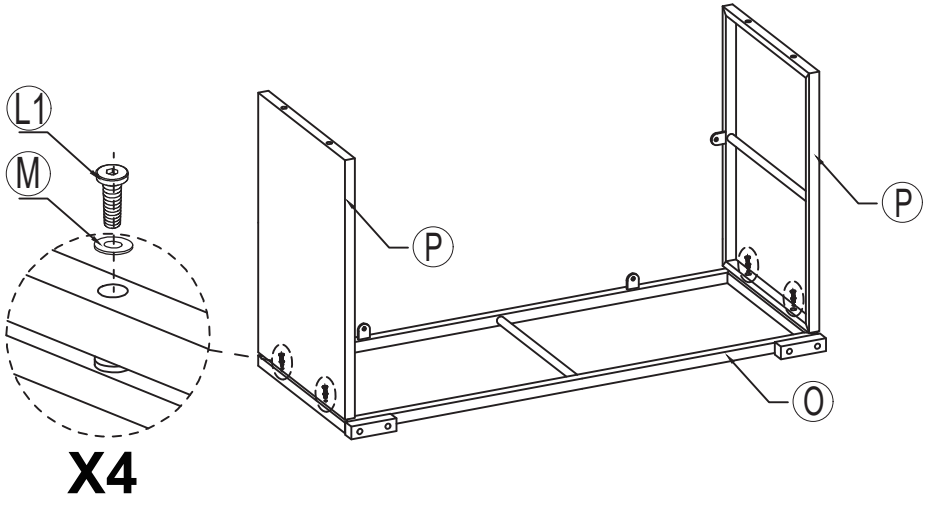

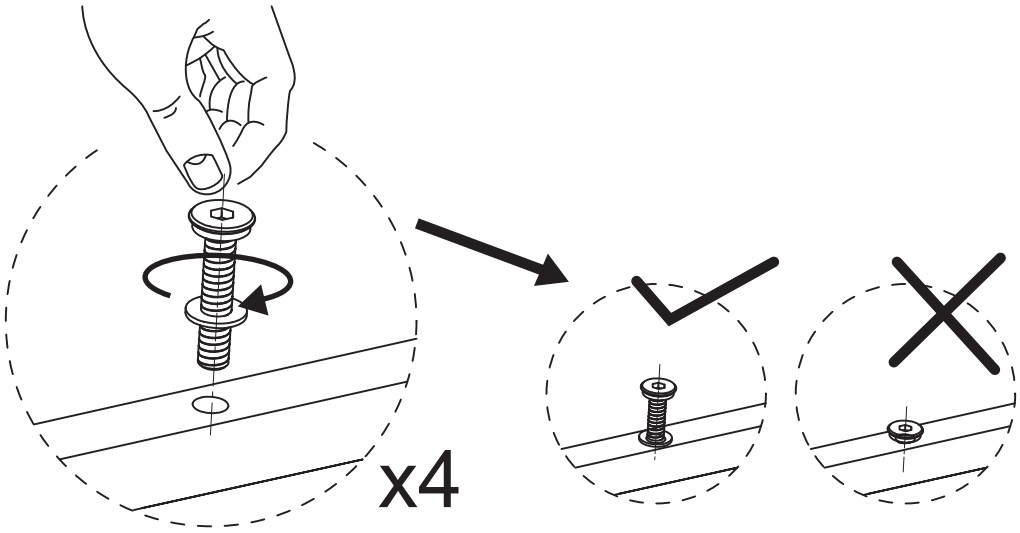

NOTE:DO NOT TIGHTEN THE SCREWS COMPLETELY.

2

Attach the another Table side Panel (O) to the Table side Panels (P) by securing with M6X35 Head Cap Screws (L1) and Washers (M). Do this in 4 places.

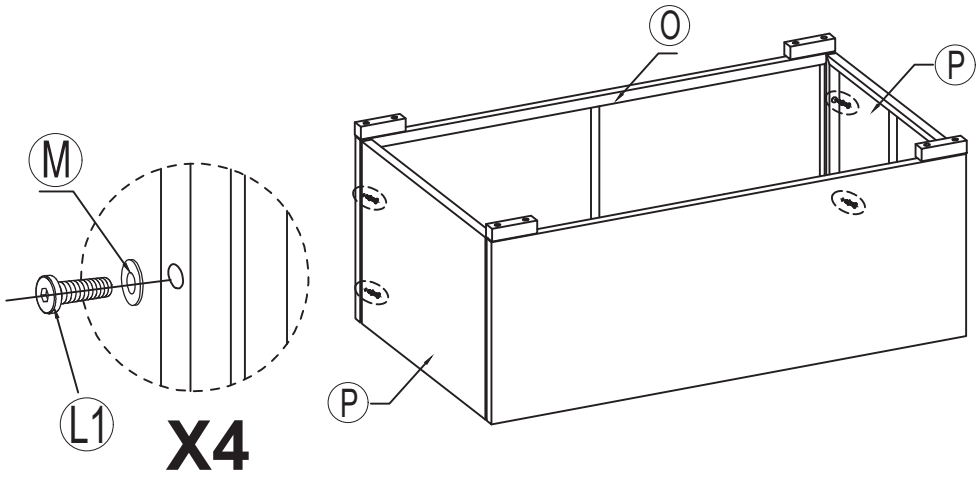

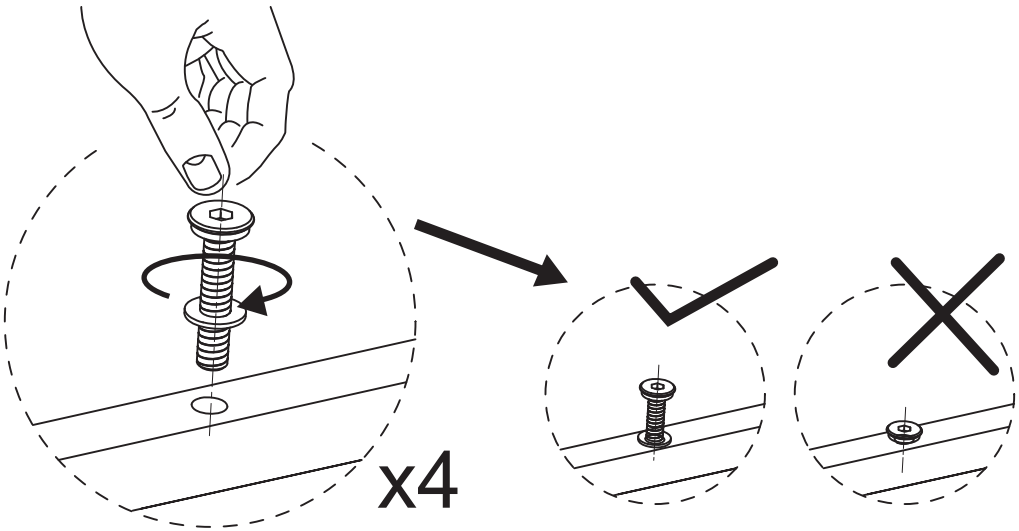

NOTE:DO NOT TIGHTEN THE SCREWS COMPLETELY.

3

Tighten all 8 Screws into place with Allen Key (N).

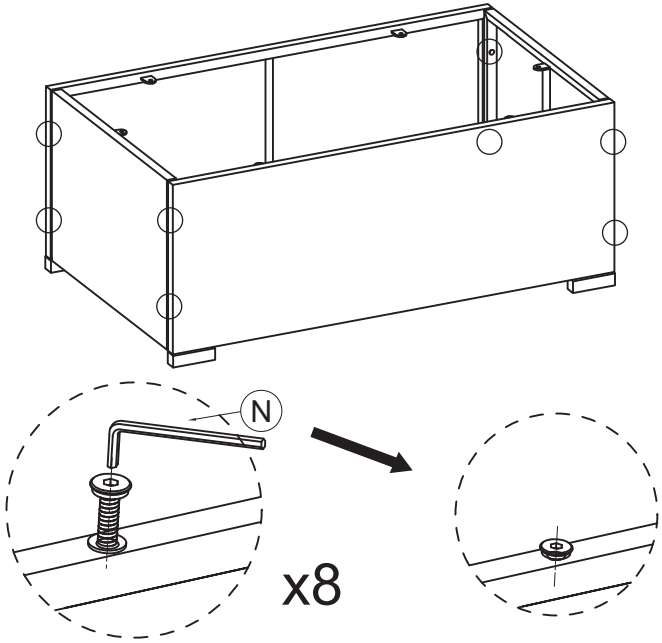

NOTE:IF ANY SCREW HOLES CANNOT BE ALIGNED, LOOSEN ALL THE SCREWS AND GO BACK STEP 1 AND RESTART ASSEMBLY.

4

Put the Table Glass (J) on the Table.
Your table is ready for use.

