Manufacture's Limited Warranty for Precision Pull Behind Accessories

The limited warranty set forth below is given by Precision Products Inc. with respect to new merchandise purchased and used in the United States, its possessions and territories.

Precision Products Inc. warranties the product(s) listed against defects in material and workmanship, and will at our option, repair or replace, free of charge, any part found to be defective in materials or workmanship. This limited warranty shall only apply if this product has been assembled, operated, and maintained in accordance with the owner's manual furnished with the product, and has not been subject to misuse, abuse, neglect, accident, improper maintenance, alteration, vandalism, theft, fire, water, or damage because of other peril or natural disaster.

Normal wear parts or components thereof are subject to separate terms as follows: All normal wear parts or component failures will be covered on the product for a period of one year. Parts found to be defective within the warranty period will be replaced at our expense. Our obligation under this warranty is expressly limited to the replacement or repair, at our option, of parts found to be defective in material and workmanship.

Contacting Service

Warranty parts replacements are available, ONLY WITH PROOF OF PURCHASE, through our Customer Service Department.

Call **1 (800) 225-5891**

This limited warranty does not provide coverage in the following cases:

1. Routine maintenance items such as lubricants and filters.
2. Normal deterioration of the exterior finish due to use or exposure.
3. Transportation and/or labor charges.

No implied warranty, including any implied warrant of Merchantability of fitness for a particular purpose, applies after the applicable period of express written warranty above as to the part as identified below. No other expressed warranty, whether written or oral, except as mention above, given by any person or entity, including a dealer or retailer, with respect to any product, shall bind Precision Products, Inc. during the period of the warranty, the exclusive remedy is repair of replacement of the product as set forth above. The provisions as set forth in this warranty provide the sole and exclusive remedy arising from the purchase.

Precision Products, Inc. will not be liable for incidental or consequential loss or damage including, without limitation, expenses incurred for substitute or replacement lawn care services, or for rental expenses to temporarily replace a warranted product.

Some states do not allow the exclusion or limitation of incidental or consequential damages, or limitation on how long an implied warranty lasts, so the above exclusions or limitations may not apply to you.

During the warranty period, the exclusive remedy is replacement of the part. In no event shall recovery of any kind be greater that the amount of the purchase price of the product sold. Alteration of safety features of the product shall void this warranty. You assume the risk and liability for loss, damage, or injury to you and your property and/or to others and their property arising out of the misuse or inability to use this product.

This limited warranty shall not extend to anyone other than the original purchaser or to the person for whom it was purchased as a gift.

Local Law to this Warranty

This limited warranty gives you specific legal rights, and you may also have other rights which vary from state to state.

Warranty Period

The warranty period stated below begins with the **Proof of Purchase**. Without the proof of purchase, the warranty period begins from the date of manufacture, determined by the serial number's manufacturing date.

Product Warranty Period

The warranty period for this product is as follows: All parts are covered for 1 year.

Precision Owner's Manual | TBS7019 | Trail Behind Broadcast Spreader

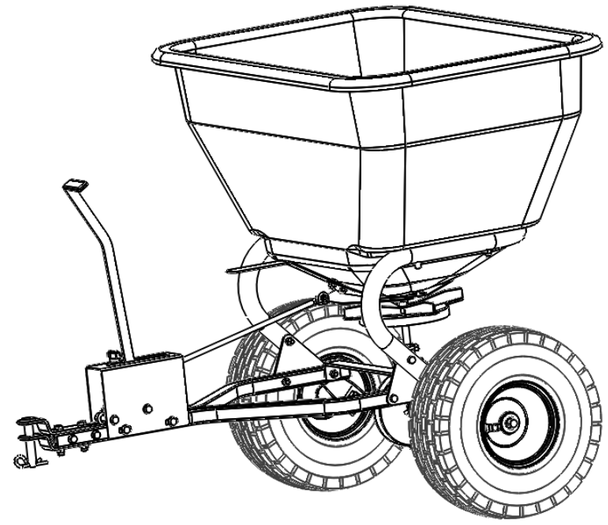

Tread pattern on tires may vary.

Manual Contents

Safety Instructions 2
Assembly 3-5
Application Chart 6-7
Operation 8
Maintenance 9
Parts 10-11
Warranty 12

Your New Trail Behind Broadcast Spreader

Congratulations on the purchase of your new Precision Product Inc. Trail Behind Broadcast Spreader. Your Spreader has been engineered and built to give you the most dependable and best performing product possible.

If you experience any problem you can not easily resolve, please feel free to contact our knowledgeable and helpful customer service department toll-free at **1 (800) 225-5891.**

Caution: Carefully read all rules and instructions

(Rev. 01/20)

Safety Instructions

All power equipment can cause injury or property damage if operated improperly. Please read and observe the following safety rules and exercise caution at all times when operating equipment.

- Read and understand your tractor owner's manual and towing safely rules. Know how to operate your tractor before using any attachment.
- Never allow children to operate the towing vehicle. Do not allow adults to operate the vehicle without having read the owner's manual or without receiving proper instruction.
- Do not allow anyone to ride or sit on tow behind equipment during operation.
- Keep all people and animals at a safe distance.
- Always wear substantial footwear. Do not wear loose fitting clothing that may get caught in moving parts.
- Keep your eyes and mind on your tractor/attachment and area being covered. Do not let yourself be distracted.
- Tractor braking and stability may be affected with the attachment of this unit. Be aware of changing conditions on slopes. Refer to safety rules in your tractor owner's manual concerning safe operation on slopes. **Stay Off Steep Slopes.**
- Always operate up and down a slope, never across the face of a slope.
- This equipment should be operated at reduced speed(s) on rough terrain, along creeks and ditches and on hillsides, to prevent tipping or loss of control.
- Always begin with the transmission in first (low) gear and engine at low speed, and gradually increase speed as conditions permit.
- Keep the tractor and attachment in good operating condition and keep safety devices in place.
- Keep all nuts, bolts and screws tight to be sure the equipment is in safe working condition.
- The tractor and attachment should be stopped and inspected for damage after striking a foreign object. Any damage should be repaired before restarting and operating the equipment.
- Follow the maintenance instructions as outlined in this owner's manual.
- Should not be towed at more than 4 miles per hours.
- The maximum recommended operating weight for this unit is 200 pounds.
- Care must be taken with any weed killer, pesticide, or combination product. They can be harmful to other plant life in the yard.

Carton Contents

1. Hitch Arm Assembly
2. Hopper Assembly

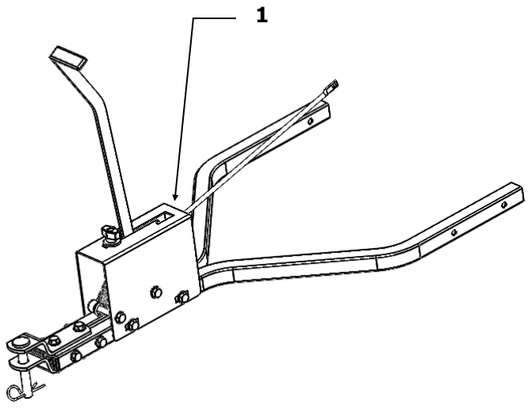

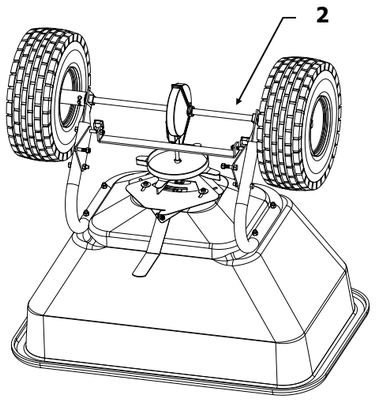

TBS7019

Ref No.	Part No.	Qty.	Description
1	2155BLK	1	Hopper
2	2151R	1	Wrap Around
3	2154R	1	Cross Brace
4	635R	1	Control Handle
5	2152	2	Hitch Arm
6	2167	1	Spread Adjustment Plate
7	2197	2	Wheel
8	603B	1	Control Housing
9	637B	1	Control Rod
10	704TS	1	Tractor Spring Extension
11	2614	1	Spinner Disc
12	2166	1	Vinyl Handle Cap (for Slide Plate)*
13	2169	1	Spreader Slide Plate Handle
14	2168	1	Slide Plate
15	4265R	2	Clevis Plate
16	2153	2	Side Bracket
17	2173	6	5/16" x 3" Hex Head Bolt
18	4041	12	5/16" x 2" Hex Head Bolt
19	2170	1	Rain Cover
20	1061	1	1/4" x 1" Hex Head Bolt
21	1416	1	Carr Bolt 1/4 x 3/4
22	1643	1	1/4" x 1-1/2" Hex Head Bolt
23	1647	2	1/4" x 1/2" Hex Head Bolt
24	2828	1	Wing Nut
25	1643SS	3	1/4" x 3/4" Hex Head Bolt (Stainless Steel)
26	2175	1	E—Clip
27	2190	1	Axle
28	1044	29	5/16" Flat Washer
29	1275	2	Hex Head Nut 5/16"
30	6143SS	3	1/4" Fender Washer
31	2149	1	Gear Case Assembly
32	1817	6	1/4" Flat Washer
33	960	2	5/8" Flat Washer
34	705TI	1	Indicator
35	1749	20	5/16" Nylock Nut
36	1558	4	1/4" Nylock Nut
37	1262	2	1/8" x 1—1/4" Cotter Pin
38	2148PU	1	Agitator Pin
39	2160	1	Spinner Shaft Bushing
40	2176	4	1" Square Tube Plug
41	2178	2	5/16" x 5/16" Rubber Roller
42	1042	1	#14 Hitch Pin Clip
43	2150	2	Axle Bearing
44	4289	1	1/2" x 3—1/2" Clevis Pin
45	709T	1	3/4 x 2" Handle grip
46	2198	1	Clevis Pin 1/4" x 1—5/8"
47	2189	1	#213 Hitch Pin Clip
48	2171B	1	Strainer (Not Shown)*
49	1817SS	3	1/4" Flat Washer (Stainless Steel)
50	1558SS	3	1/4" Nylock Nut (Stainless Steel)
51	3254	2	Spacer 3/8" x 3/8 12Ga
53	5068	1	Washer 1/4 Nylon Fender
56	2157MOD	1	Compression Spring
57	1644	1	HH Bolt 5/16—18 x 3 Grade 8
58	9229	1	HH Bolt Full Thread 5/16 x 3 G5

*Not all parts shown.

Parts and Support

STOP ***Please do not return this product to the store prior to contacting the number below.***

At Precision Products Inc. our goal is to deliver quality, value and outstanding service. If for any reason our product does not meet your expectations, please contact us and we will take care of any problem you may have with this unit.
When ordering replacement parts please have the model number, part description, part number, inspector number and date on box, available so that we can best serve you.

1 (800) 225-5891
www.precisionprodinc.com
Precision Products Inc.
316 Limit St.
Lincoln IL 62656

Control Housing Assembly

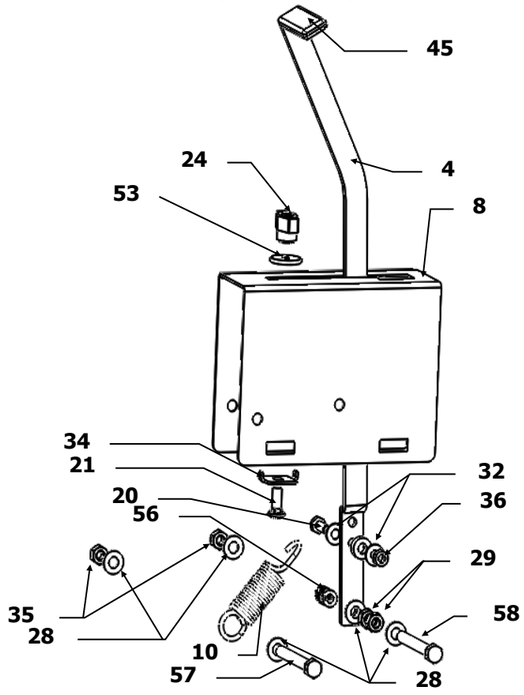

Hopper Assembly

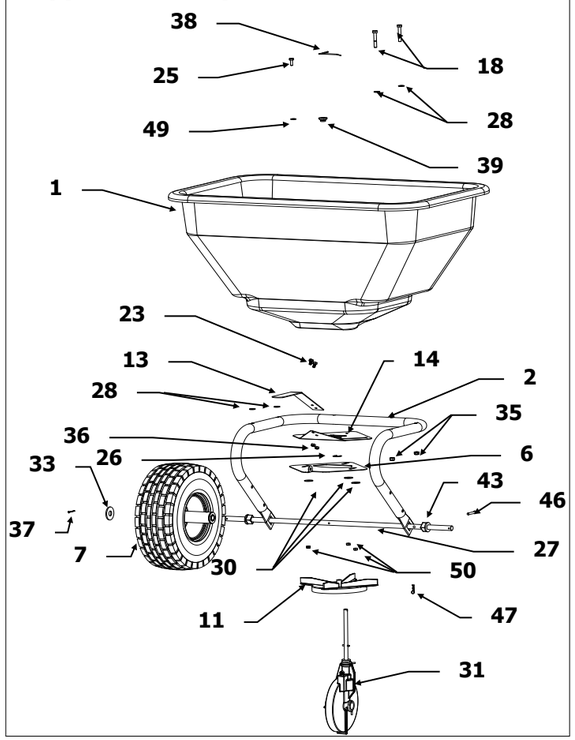

Hitch Arm Assembly

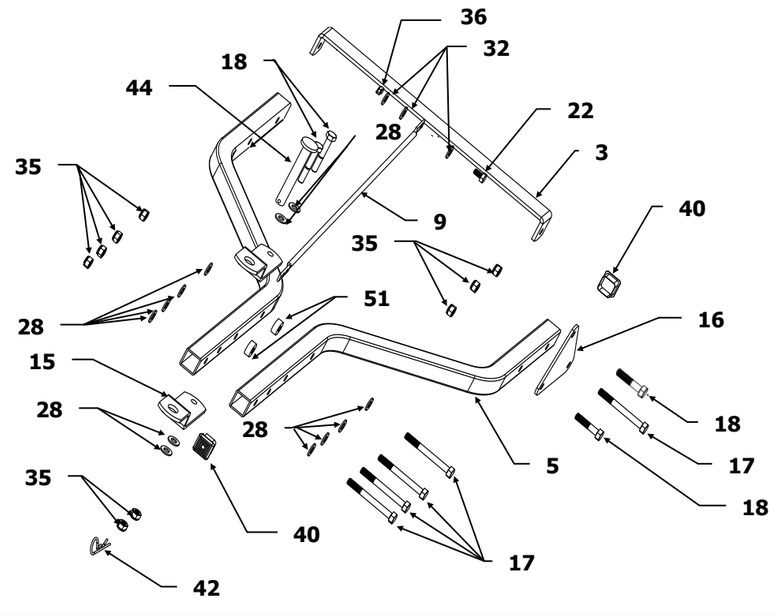

Assembly Instructions

Tools Required for Assembly

Minimum
(2) 1/2” Wrenches
(2) 7/16” Wrenches

Remove from Carton

Remove all parts and hardware packages from the carton.

Assembly

Note: Bolts on the Hitch Arm Assembly are not fully tightened to make assembly easier.

1. Remove two pre-attached 5/16” x 2” Hex Head Bolts in front holes and the two 5/16” x 3” Hex Head Bolts in rear holes. Remove the 5/16” Nylock Nuts (both sides) and Cross Brace. It is not necessary to remove the tire for this step, this is shown only for clarity. See Figure 1.

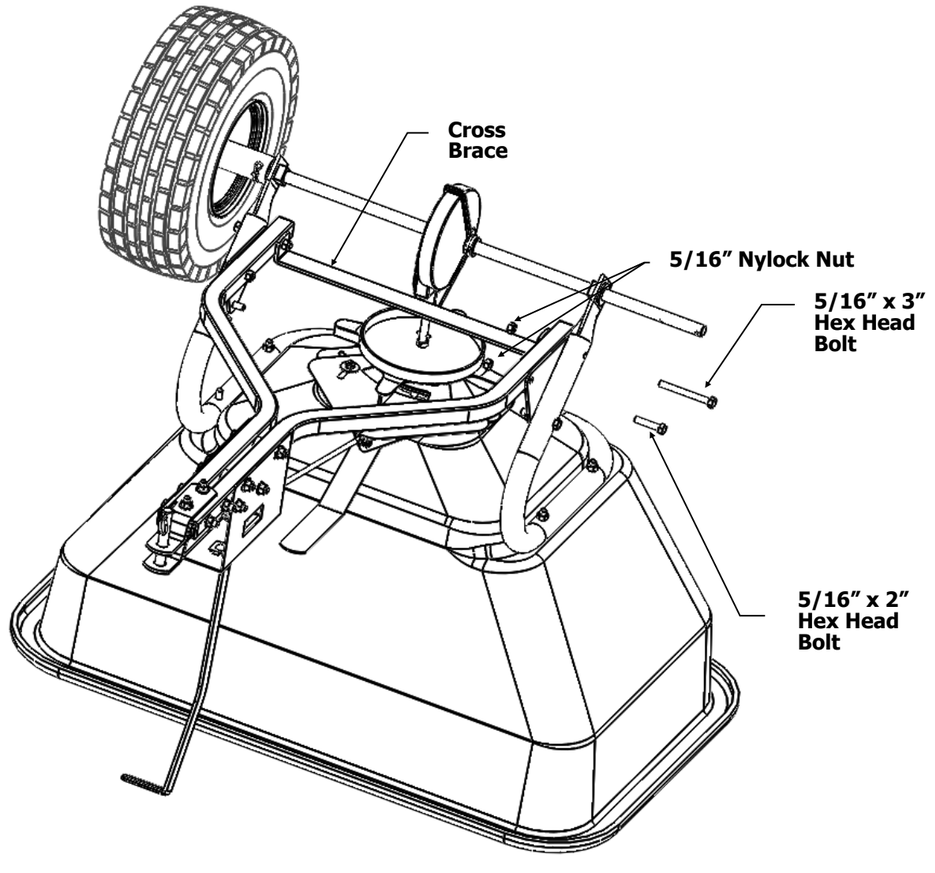

Figure 1

2. Remove the front 1/4" x 1/2" Hex Head Bolts and 1/4" Nylock Nut from the Spreader Slide Plate, turn the Spreader Adjustment Handle until both holes are aligned. Re-insert the Bolt and attach the nut. See Figure 2.

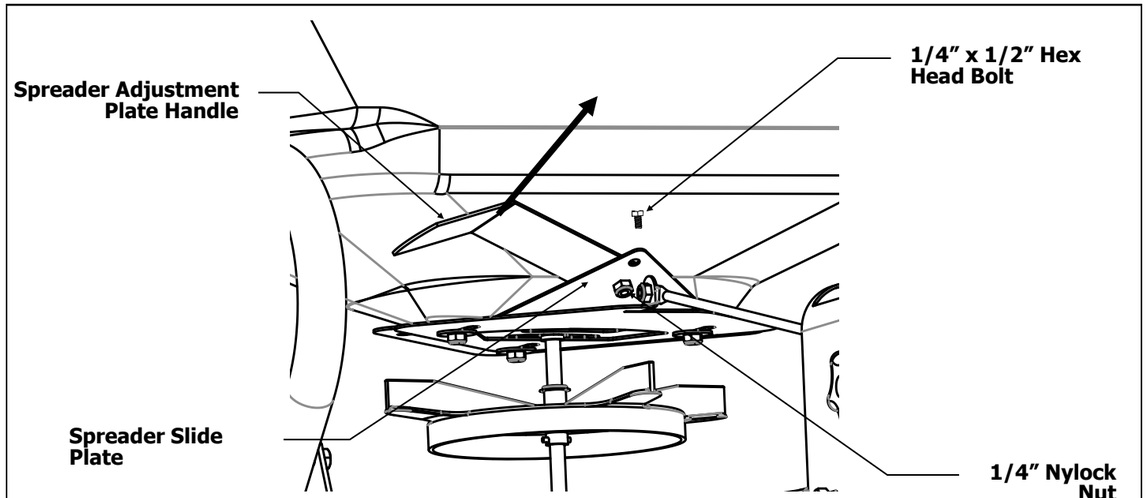

Figure 2

3. Attach the Hitch Arm Assembly and re-insert the Cross Brace inside both sides of the Hitch Arm Assembly. Secure with the two removed 5/16" x 2" Hex Head Bolts and two 5/16" x 3" Hex Head Bolts then reattach the four 5/16" Nylock Nuts. See Figure 3.

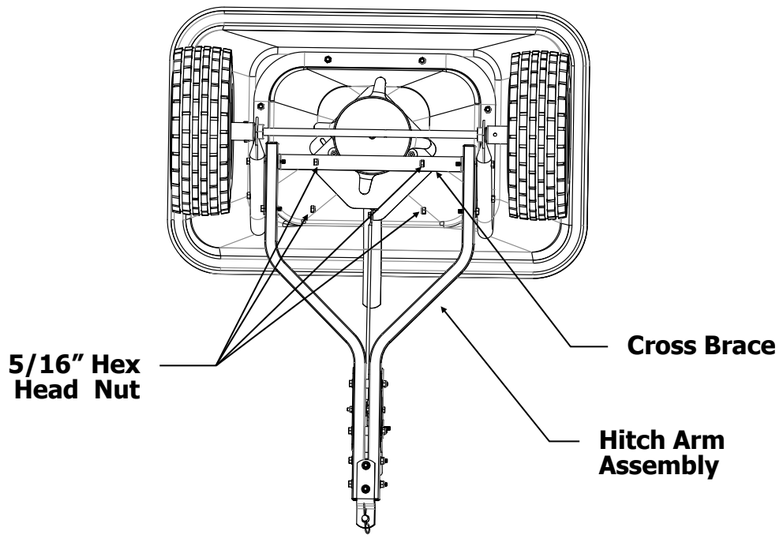

Figure 3

Free-Wheel Option

Your TBS7019T Spreader has a unique feature which allows the spreader to be transported over long distances, at greater speeds without wear and tear on the gear case assembly. Remove #213 Hitch Pin Clip, next remove 1/4" x 1-5/8" Clevis Pin. "Free Wheel" option turns only the wheels and leaves the axle and the gear case assembly at rest. See Figure 6.

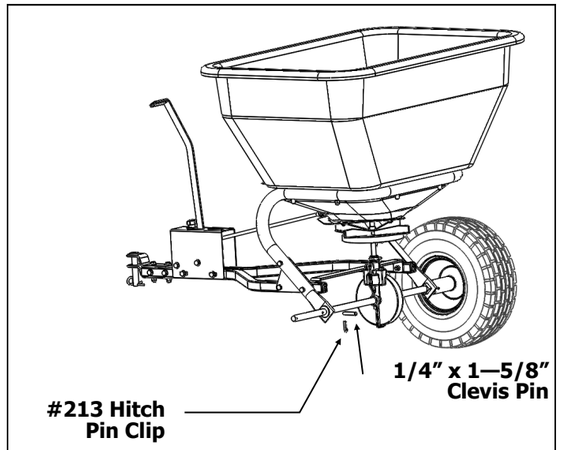

Figure 6

REMEMBER: If you are traveling with a loaded hopper at higher speeds, the spreader stands a greater chance of becoming unstable and turning over. **BE CAUTIOUS OF THE TERRAIN!** The more un-even the terrain is, the more you need to lower your speed.

Maintenance

1. Before each use, check all nuts and bolts for tightness.

2. Empty Hopper after each use. Do not store spreader with material left in hopper.

3. Wash spreader thoroughly and wipe dry. The key to years of trouble-free service is to keep your unit clean and dry.

4. If rust should develop, sand lightly and then paint area with enamel.

5. Lubricate all moving parts. Use a grease gun to apply grease to the gearbox assembly.

6.

CAUTION: Use a reasonable amount of grease. DO NOT pack gearbox full of grease. Apply oil to spinner shaft (including area where the shaft extends through hopper), slide plate and where the spinner shaft and axle extend through the gearbox.

Storage

1. Rinse inside of hopper and exterior of spreader and allow to dry before storing.

2. Store in a clean, dry area.

Slide Plate/ Control Housing Adjustment

1. For proper calibration the Slide Plate must be zeroed-out first. This means that the Slide Plate must be fully closed when the Handle is in the Closed position.

2. Place the Handle in the closed position. Check inside the Hopper to make sure there is no gap between the Slide Plate and the Hopper opening on the bottom. If there is a gap, adjust the Control Housing either forward or back until the gap closes to the edge of the Hopper bottom. Once this is accomplished, tighten the two bolts on the Control Housing to lock the adjustment in place. See Figure 5.

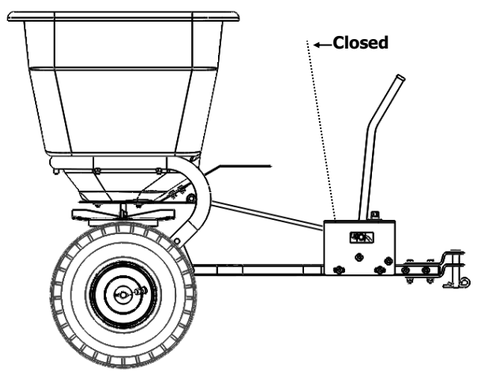

Figure 5

Calibration

The calibration numbers are based on pounds per 1,000 square feet. These calculations are based on testing with a popular brand of fertilizer, so results may vary slightly. Calculate the amount of fertilizer that needs to be applied according to the bag of fertilizer you plan to use. To do this: first read how much the bag weighs. Divide the total bag weight by how many square feet the manufacturer says the bag will cover. Take your total (which will be pounds per square foot) and multiply by 1,000 to get pounds per 1,000 square feet total. For example, a 50 lb. bag of fertilizer says it will of pounds per 1 square foot). Multiply .00333 by 1,000 to get 3.33. This is the total pounds per 1,000 square feet you will need to apply. Round the number down to 3, and set the Calibration Strip to the desired setting. Tighten the Control Knob.

Operation

1. Always have the Control Lever in CLOSED position before filling the hopper.

2. Always pull the spreader forward to operate; do not operate in reverse.

3. Start moving forward before pushing the control lever to the OPEN position. Pull the control lever to OFF position before stopping or turning.

4. Pull the spreader at a steady speed (approximately 4 mph is recommended).

5. To avoid misses or striping, space each pass across the lawn so approximately 20% of the spread width overlaps on the previous pass. This provides a "feathered" overlap to even out distribution over the width of the spread.

CAUTION: Care must be taken with any weed killer, pesticide, or combination product. They can be harmful to other plant life in the yard.

DO NOT allow spreader to sit stationary with material in the hopper and control lever in the OPEN position.

If you spill the fertilizer or feel you have over fertilized, the antidote is plenty of water. Water pushes the fertilizer past the roots so it will not burn plants

Maximum recommended operating weight is 200 lbs.

4. Remove the 1/4" x 1" Hex Head Bolt and 1/4" Nylock Nut from the end of the Control Rod. Attach the Control Rod to the Slide Plate on the Hopper Assembly using the 1/4" x 1" Hex Head Bolt first place one 1/4" Flat Washer onto bolt, insert bolt through hole in Connect Rod and place another 1/4" Flat Washer on to the bolt, then insert bolt through hole on the front of the Slide Plate, place another 1/4" Flat Washer and secure with 1/4" Nylock Nut. See Figure 4.

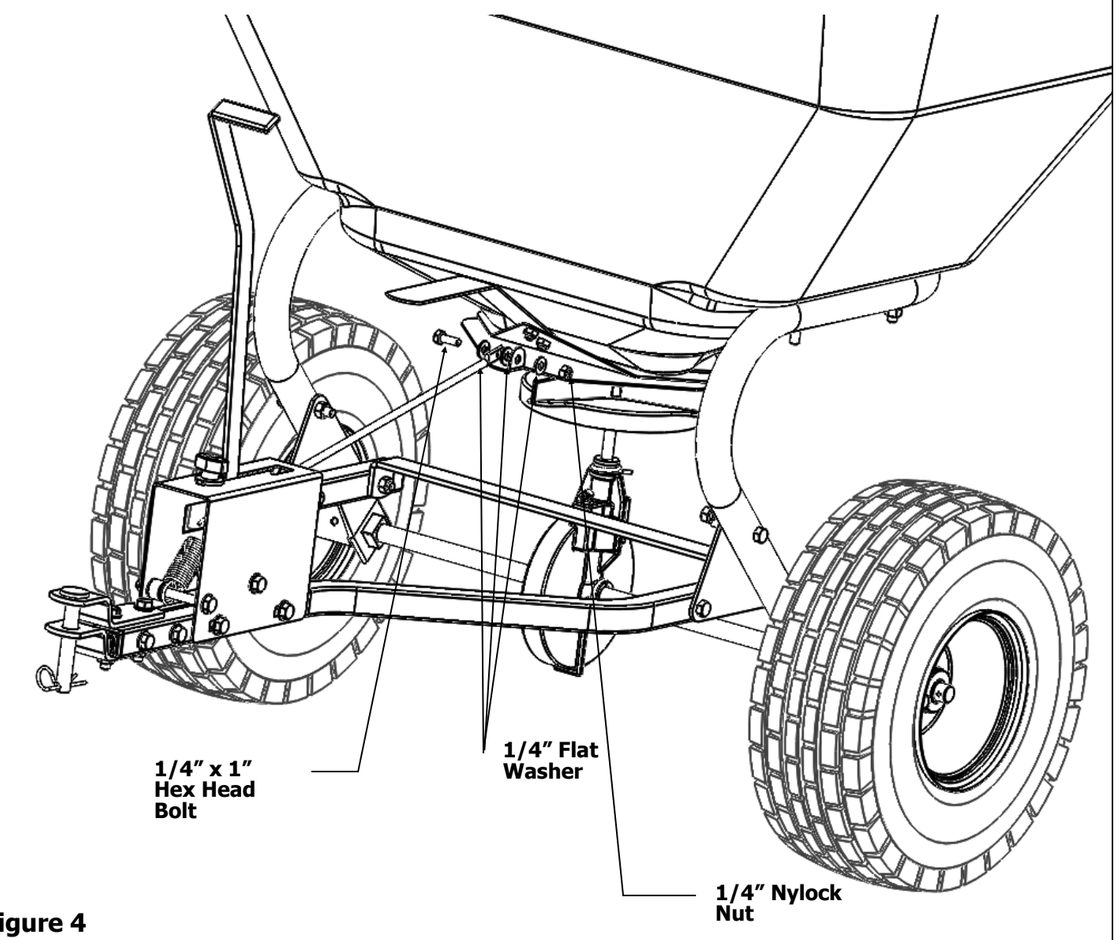

Figure 4

5. Tighten the four bolts used to hold the Hitch Arm and Hopper Assemblies together. Tighten the two Clevis Plate bolts and Hitch Arm End bolts.

6. Check and tighten all loose nuts and bolts.

Broadcast Spreader Application Chart

Applying Product

1. **Set Flow Rate**
   - Calculate or find the rate setting for the product being spread. See the calculation chart on the next page.
   - Slide the Control handle to the calculated flow rate and set the Indicator using Wing nut.
2. **Fill the Hopper**
   - With the spreader control lever in the off position, fill the spreader over a patch of bare ground or sidewalk/driveway.
   - **DO NOT** fill the spreader on the lawn. Sweep up any spilled product.
3. **Apply**
   - While unit is in motion at approximately 3 miles per hour, push spreader control lever up to calibration indicator button to release product.

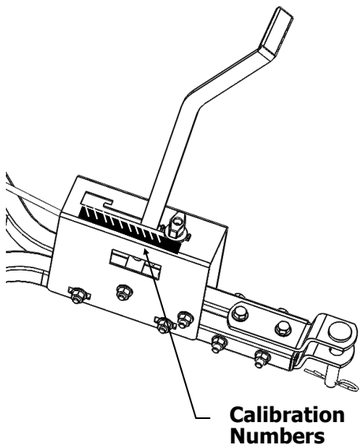

Application Tips

- **For rectangular lawns,** apply two header strips at each end of the lawn and then go back and forth between the header strips. Close spreader at the end of each pass and reopen at the start of next pass.
- **For irregular-shaped lawns,** apply one header strip around the entire lawn, and then go back and forth.
- To avoid streaks or misses, slightly overlap each strip over the edge of the previous strip.
- Use the settings under "Standard Settings" Section for most applications by figuring lbs. per 1000 square feet.
- These numbers are for a one pass application.
- A two pass application is recommended, using a crisscross pattern. If using this method, us half the setting number given.
- If you think too much is being applied, cut down your setting. The solution for too much fertilizer is water.
- Close Spreader at the end of each pass. Open again at the start of your next pass.

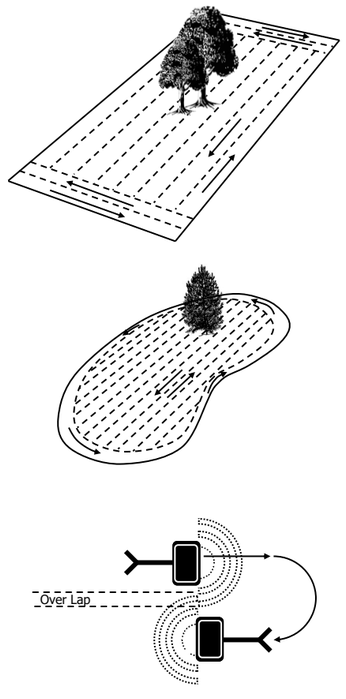

Calculating Your Flow Setting

To calculate how many pounds of material to spread per 1000 square feet of lawn. Follow these steps.

1. Read on your material bag how many square feet of area the contents of the bag will cover and how many pounds the bag weighs.
   Example:
   You have purchased a bag of fertilizer that states that it will cover 5,000 square feet, and weighs 16.0 pounds.

2. To calculate coverage divide bag weight by suggested coverage to obtain pounds per square foot that is needed to be applied.
   Example:
   16.0 lbs. ÷ 5,000 sq. ft. = .0032 lbs./sq. ft.

3. To calculate how much you need for 1000 sq. ft. multiply the pounds per square foot obtained above by 1000.
   Example:
   .0032 lbs/sq. ft. x 1000 = 3.2 lbs./1000 sq. ft.

4. Refer to standard settings table and locate the appropriate settings number.
   Example:
   3.2 lbs./1000 sq. ft is closest to a 3 lbs./1000 sq. ft so the spreader setting is a 3.

These are general information setting intended to be used as only references.

STANDARD SETTINGS

Fertilizer Lbs. per 1000 sq. ft.	Setting Broadcast Spreaders
2.5	2
3.0	3
3.5	3
4.0	4

Grass Seed	Setting
Blue Grass	3
Bent Grass	3
Fine Mixture	10
Coarse Seed	10

Insecticide (Diazinion)	Setting 2

Caution

On the bag of **fertilizer** there should be a **chart** that gives the recommended settings for that particular bag. Because different manufactures of **fertilizer** make the granules different sizes it is impossible for spreader manufactures to give guidelines for all of the different fertilizers. In addition to this walking speed and terrain, may vary, therefore settings may need to be adjusted. Because of these conditions, GroundWork makes no warranty as to the uniformity of coverage actually obtained from any of these calculations.

_____Length

X_____Width

=_____Total sq. ft.

-_____Non-Lawn Area
House, drive etc.

=_____Total sq. ft.
Coverage
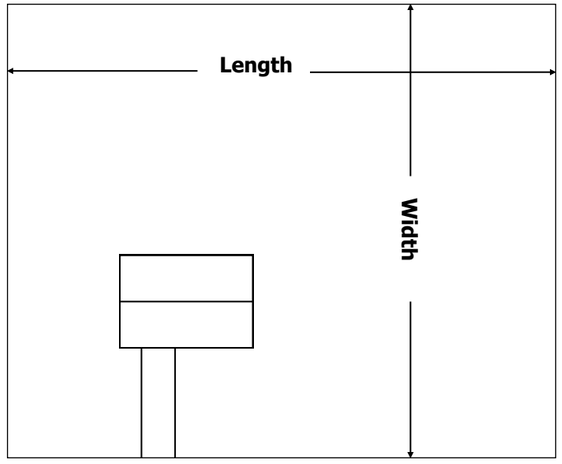
CALCULATING COVERAGE AREA