SEAHORSE
PROTECTIVE EQUIPMENT CASES

SE720

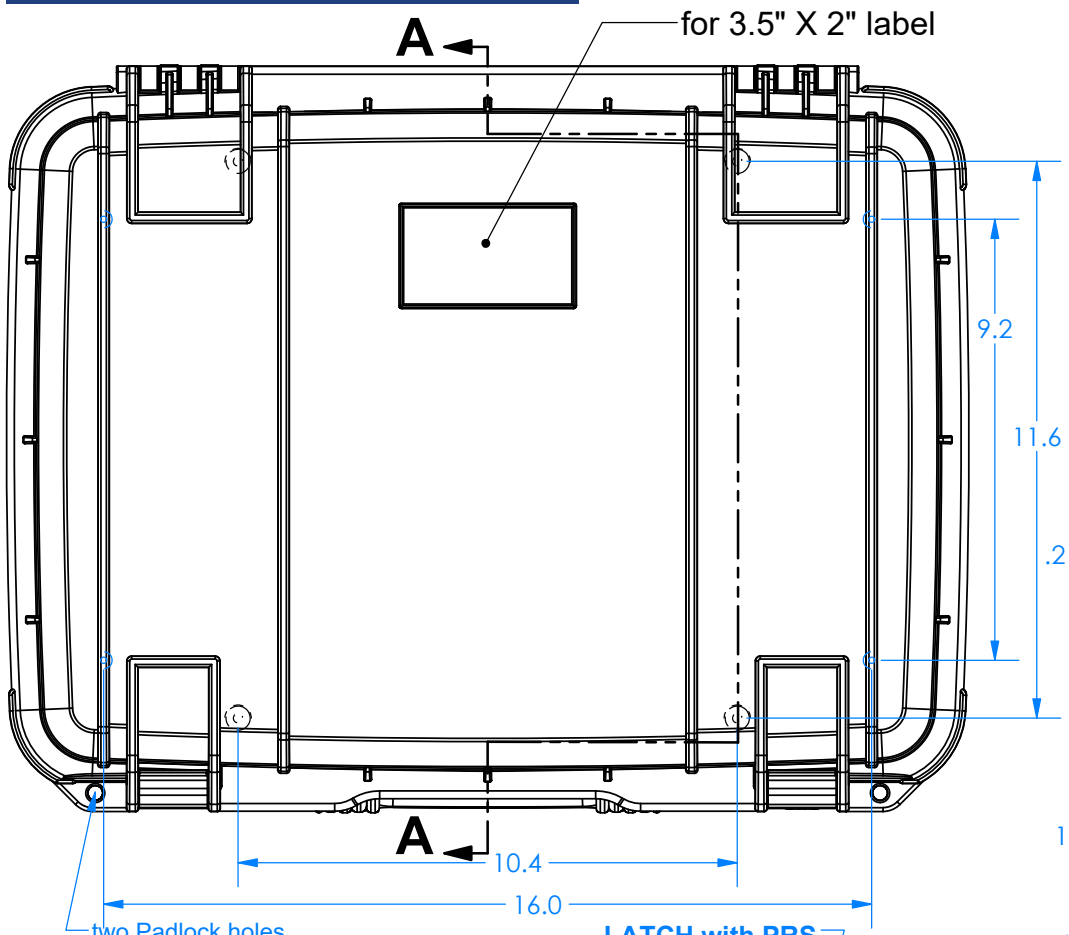

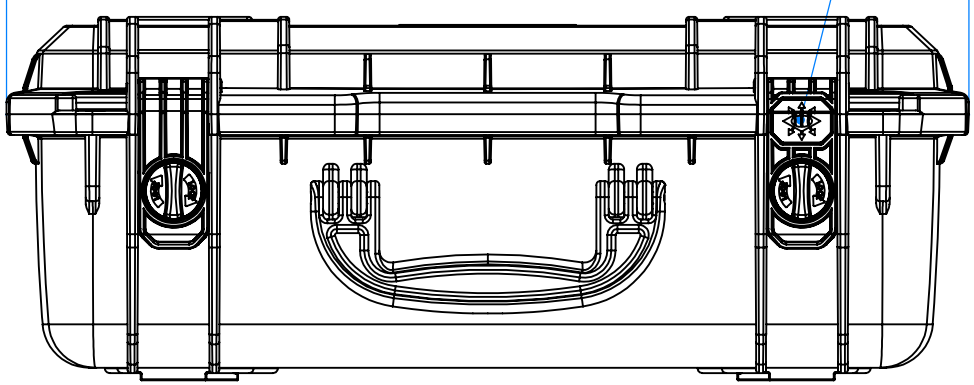

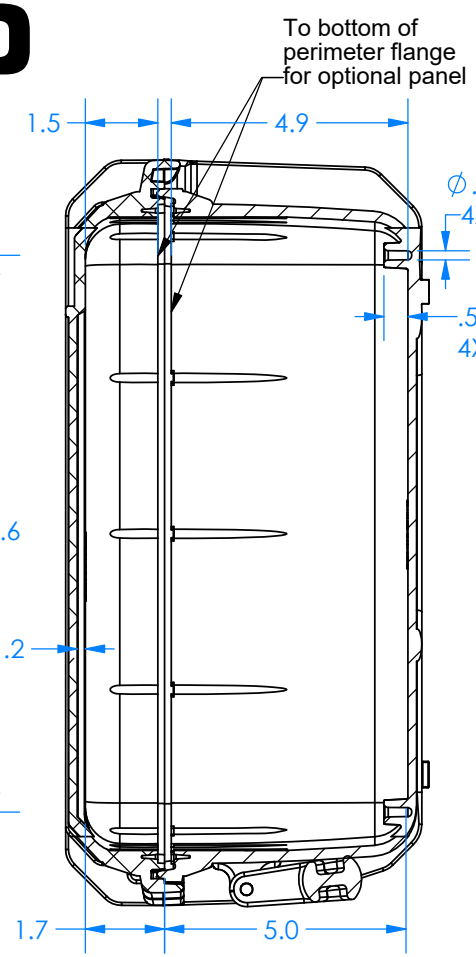

SECTION A-A

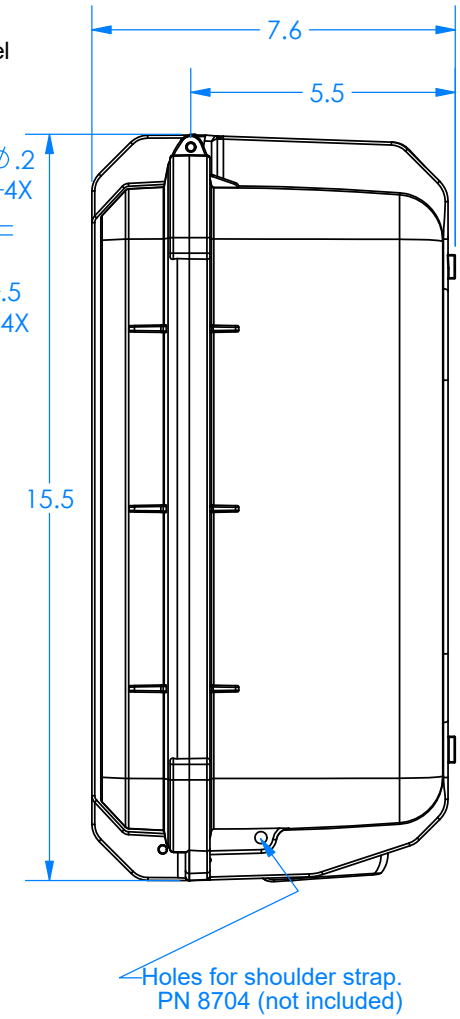

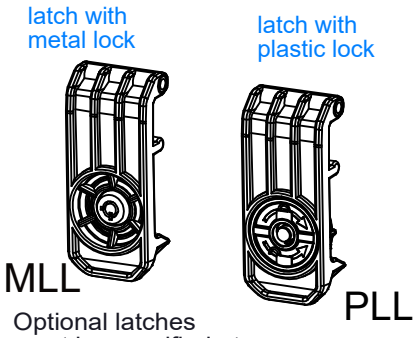

Optional latches must be specified at time of order. See note 2

NOTES:

1) Max. usable inside dimensions are:

18 5/16" X 13 3/16" X 6 1/4" (top of boss)

(6 5/8" bottom of boss) (18.3" X 13.2" X 6.7")

2) With Metal Lock Latches p/n SE720ML and Plastic Lock Latches p/n SE720PL are optional.

6/23/14

2009 Wright Ave. La Verne, CA 91750
Ph. (626) 339-6673 Fx. (626) 331-8584 www.seahorse.net