Replacement Parts List

Pritchhand 2-Handle Spring Neck Pull-down Sprayer Bridge Kitchen Faucet

MODEL	SKU #	Internet SKU #	FINISH
HD67080W-1008D2	1005169830	312570814	Stainless Steel

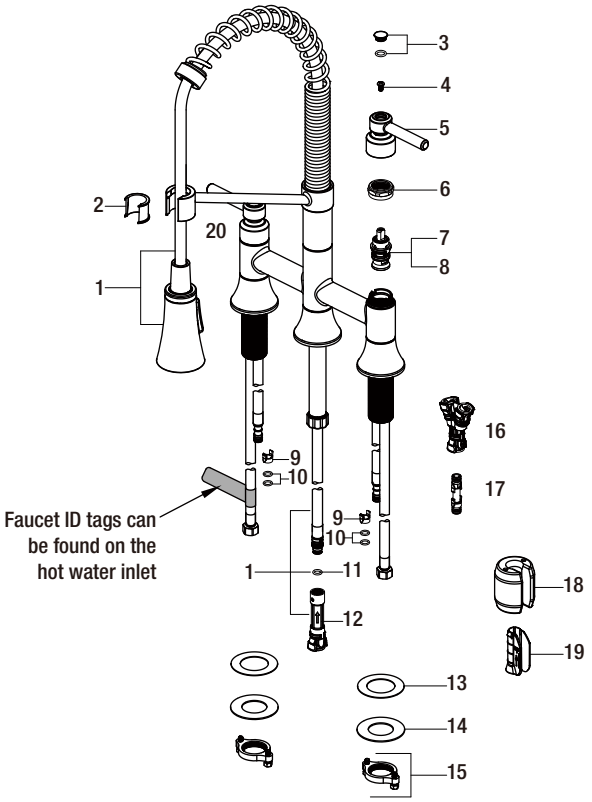

Many replacement parts can be purchased online or at your local store. Please use the table below to identify the part SKU number needed, go to HOMEDEPOT.COM, and check for online and store availability. If you can't find the part you are looking for, please call 1-855-HD-GLACIER.

Part	Description	Part #	Internet SKU #	Store SKU #
1	Spray head and Hose	RP3846808D2		
2	Inverter	RP70715		
3	Index & O-ring	RP8037408D2		
4	Screw	RP50154		
5	Handle	RP1371508D2		
6	Bonnet nut	RP70723		
7	Cartridge H	RP20067		
8	Cartridge C	RP20068		
9	Block	RP70711		
10	O-ring	RP60002		

Part	Description	Part #	Internet SKU #	Store SKU #
11	O-ring	RP60089		
12	Quick connect assembly	RP70697		
13	Plastic washer	RP64131		
14	Metal washer	RP64188		
15	Nut & Screw	RP56115		
16	Quick connect assembly	RP70735		
17	Quick connector	RP70736		
18	Weight	RP70689		
19	Weight clip	RP64204		
20	Index & O-ring	RP8037308D2		