LOFT BED
ASSEMBLY INSTRUCTIONS
ITEM MF199509/199510

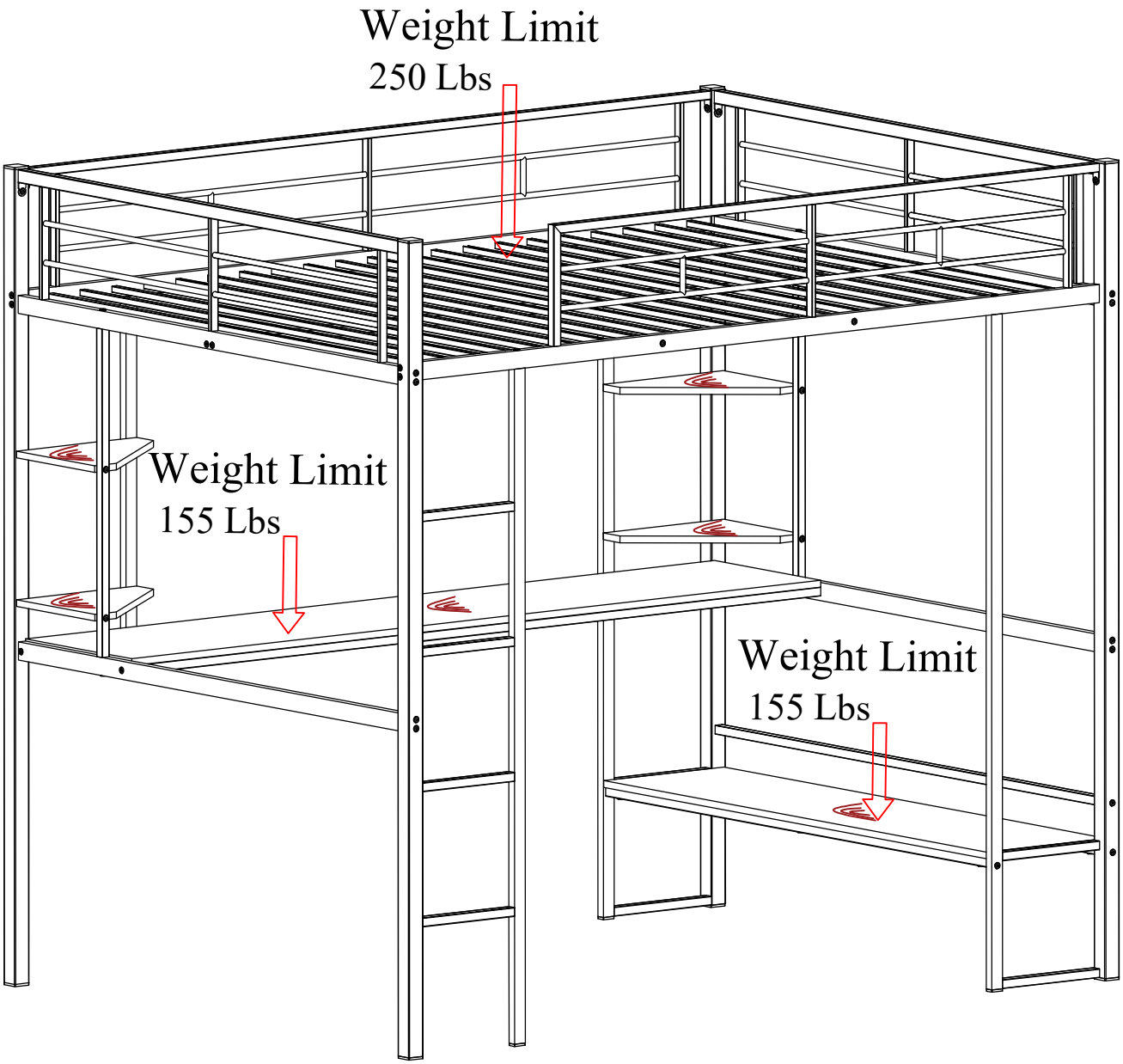

If you have any questions, please feel free to contact us.
Email: service@qualfurn.net

SAFETY WARNINGS AND GENERAL NOTES:

1. Follow the information on the warnings on the bunk bed end structure and on the carton. Do not remove the warning label from the bed.
2. Always use the recommended size mattress on mattress support, or both, to help prevent the likelihood of entrapment or falls.
3. Do not allow children under 6 years of age to use the upper bunk.
4. Periodically check and ensure the guardrail, ladder and other components are in their proper position, free from damage, and all connectors are tight.
5. Do not allow horseplay on or under beds.
6. Always prohibit jumping on the bed.
7. Prohibit more than one person on upper bunk.
8. Always use the ladder for entering and leaving the upper bunk.
9. Do not use substitute parts.Contact the manufacturer or dealer for replacement parts.
10. Use of a night-tight may provide added safely precaution for a child using the upper bunk.
11. Always use guardrails on both long sides of the upper bunk.
12. If the bunk bed will be placed next to a wall, the guardrail that runs the full length of the bed should be placed against the wall to prevent entrapment between the bed and the wall.
The use of water or sleep flotation mattresses is prohibited.
13. STRANGULATION HAZARD-Never attach or hang items to any part of the bunk bed that are not
designed for use with the bed.
14. Keep these instructions for future reference.
15. We recommend assembling your bunk bed on the shipping carton to protect your floor or carpet.
16. Be certain all staples are out of the box before beginning assembly on the shipping carton.
17. USE ONLY MATTRESSES WHICH ARE AS THE TABLE BELOW ON UPPER AND ON LOWER BUNKS.
Up bed (bunk bed and tribed included)

Bed type	Length	Width	Thickness
Full Standard	74” – 75”	53 ½’’	6’’ max

18. SURFACE OF MATTRESS MUST BE AT LEAST 5" (127MM) BELOW THE UPPER EDGE OF GUARDRAILS.
19. Replacement Parts:
Replacement Parts, including additional guardrails, may be obtained from any of our (GIGACLOUD TECHNOLOGY(USA) INC.) dealers

DETAIL VIEW

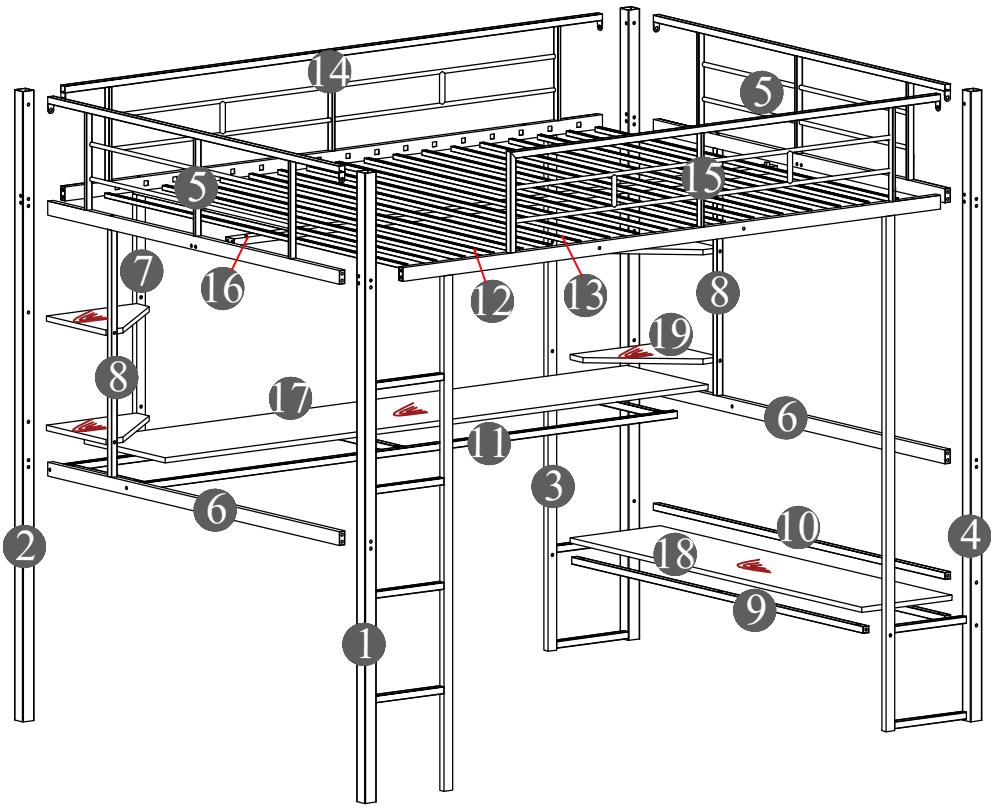

LOFT BED
ASSEMBLY INSTRUCTIONS
ITEM MF199509/199510

PART LIST MF199509

⑪ Table Frame 1PC	⑭ Guard Bar 1PC	⑮ Guard Bar 1PC	
⑯ Horizotal bar 1PC	⑰ Wooden table panel 1PC	⑱ Wooden shelf panel 1PC	⑲ Wooden shelf panel 2 Left & 2 Right 4PCS

PART LIST MF199510

① Vertical frame 1PC	② Vertical bar 1PC	③ Vertical frame 1PC
④ Vertical frame 1PC	⑤ Headboard 2PCS	⑥ Horizotal bar 2PCS
⑦ Vertical bar 1PC	⑧ Vertical bar 2PCS	⑨ Horizotal bar 2PCS
⑩ Horizotal bar 1PC	⑫ Slats 19PCS	⑬ Slats 2PCS

HARDWARE LIST MF199509

Ⓐ Bolts 1/4"*55 36PCS	Ⓑ Bolts 1/4"*50 4PCS	Ⓒ Bolts 1/4"*35 12PCS	Ⓓ Bolts 1/4"*30 20PCS

Ⓔ Bolts 1/4"*15 11PCS	Ⓕ Pipe plug 40*40 8PCS	Ⓖ Pipe plug 30*20 3PCS	Ⓗ Allen key 4*59 1PC	Ⓘ Connect wall 1/4"*40 2Set

This set is included 2 boxes if don't receive full 2 boxes please contact our customer service team.

LOFT BED
ASSEMBLY INSTRUCTIONS
ITEM MF199509/199510

STEP 1 : Following below illustration Assembly Frame # 1.
Using hardware #A, #E, #F, #G connect #1 & #2 with #5, #6 & #8 to complete Frame #1.

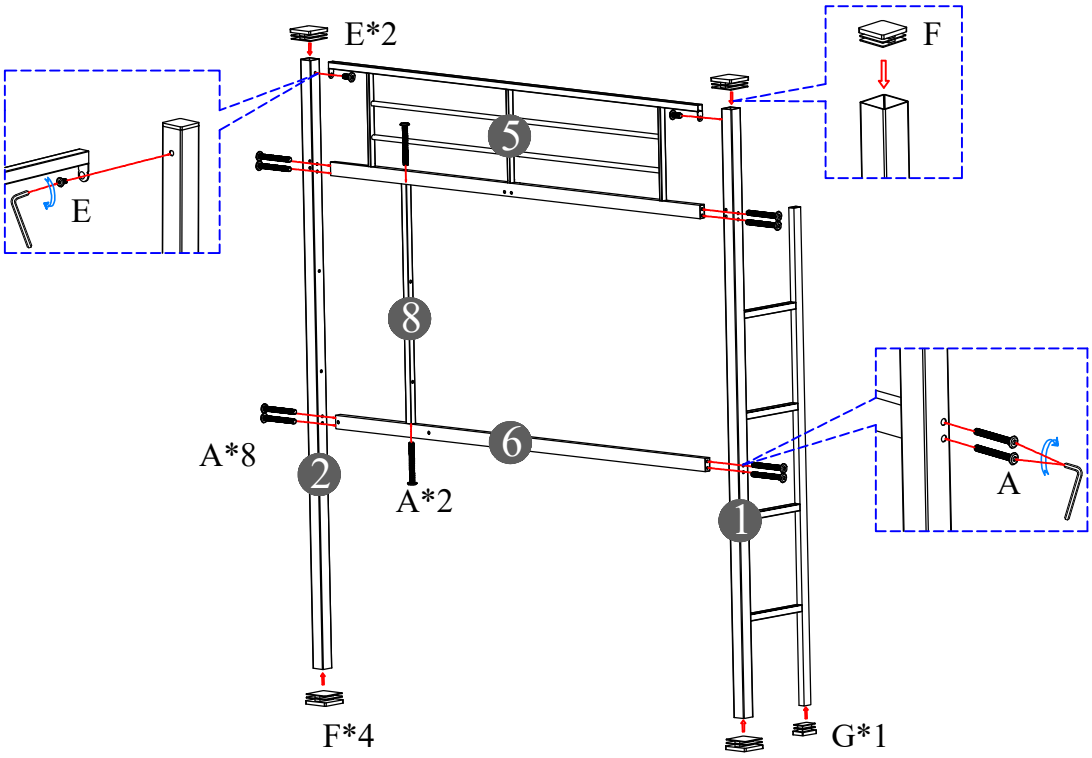

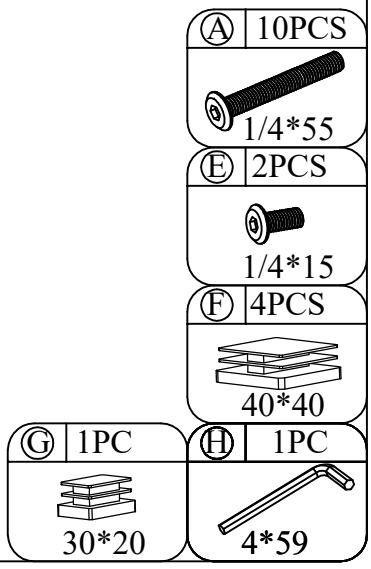

NOTE:In this step, DO NOT tighten any bolt until you connect all part together.

STEP 2 : Following below illustration Assembly Frame # 2.
Using hardware #A, #C, #E, #F, #G connect #3 & #4 with #5, #6, #8, #9, #10 to complete Frame #2.

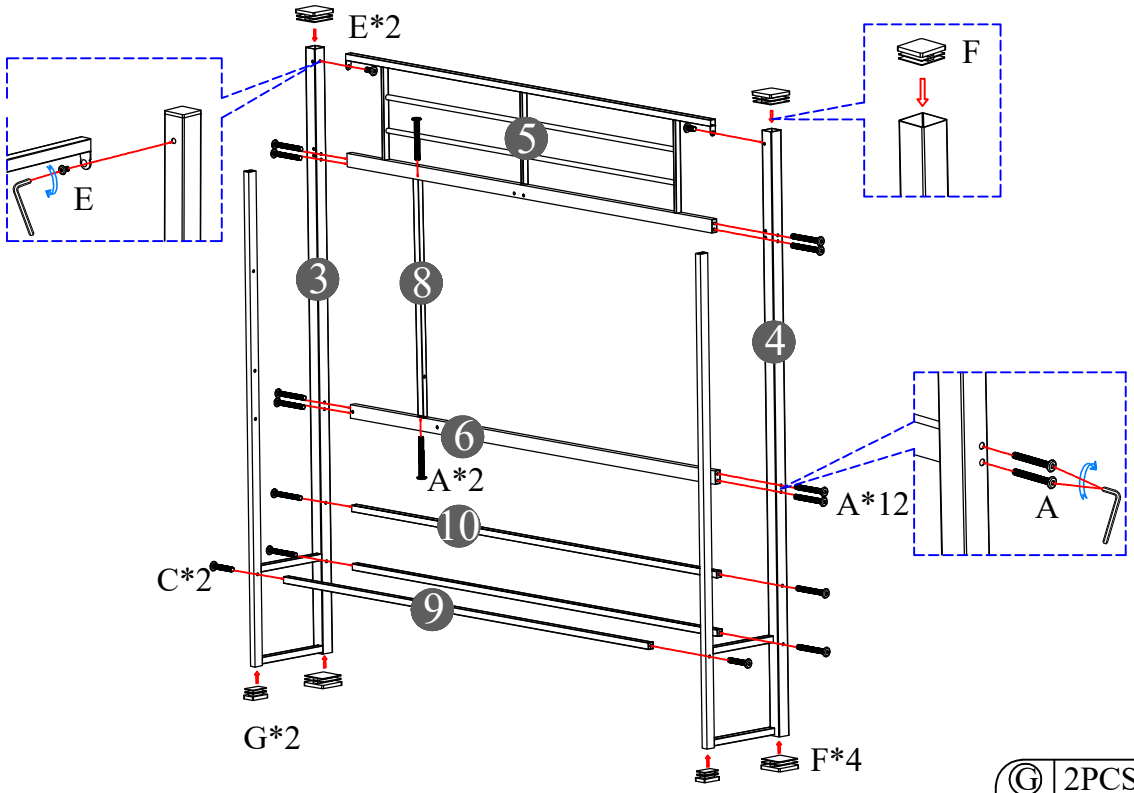

Ⓐ	14PCS
Ⓒ	2PCS
Ⓔ	2PCS
Ⓕ	4PCS
Ⓖ	2PCS
Ⓗ	1PC

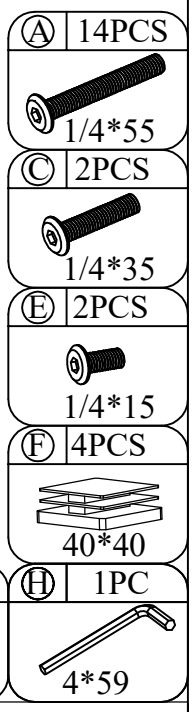

NOTE:In this step, DO NOT tighten any bolt until you connect all part together.

STEP 3 : Following below illustration Assembly Frame # 3.
Using hardware #E connect #14 , #15 with #12, #13 to complete Frame #3.

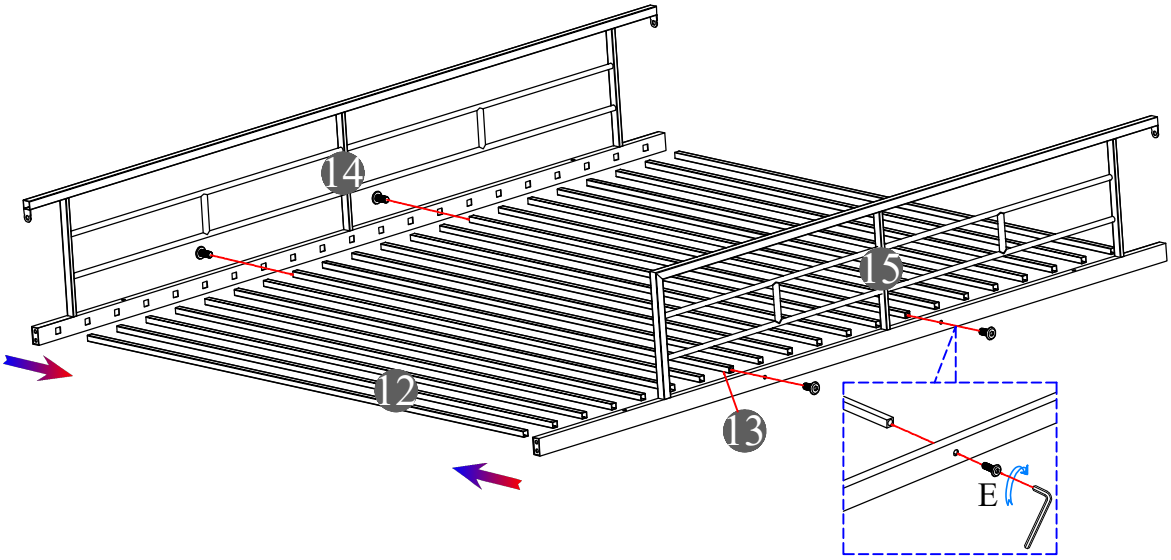

Ⓔ	4PCS
Ⓗ	1PC

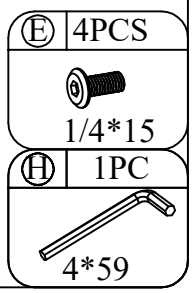

NOTE:In this step, DO NOT tighten any bolt until you connect all part together.

STEP 4 : Following below illustration Assembly Frame # 4.
Using hardware #A, #C, #E connect Frame #1 , Frame #2 with Frame #3, #16 to complete Frame #4.

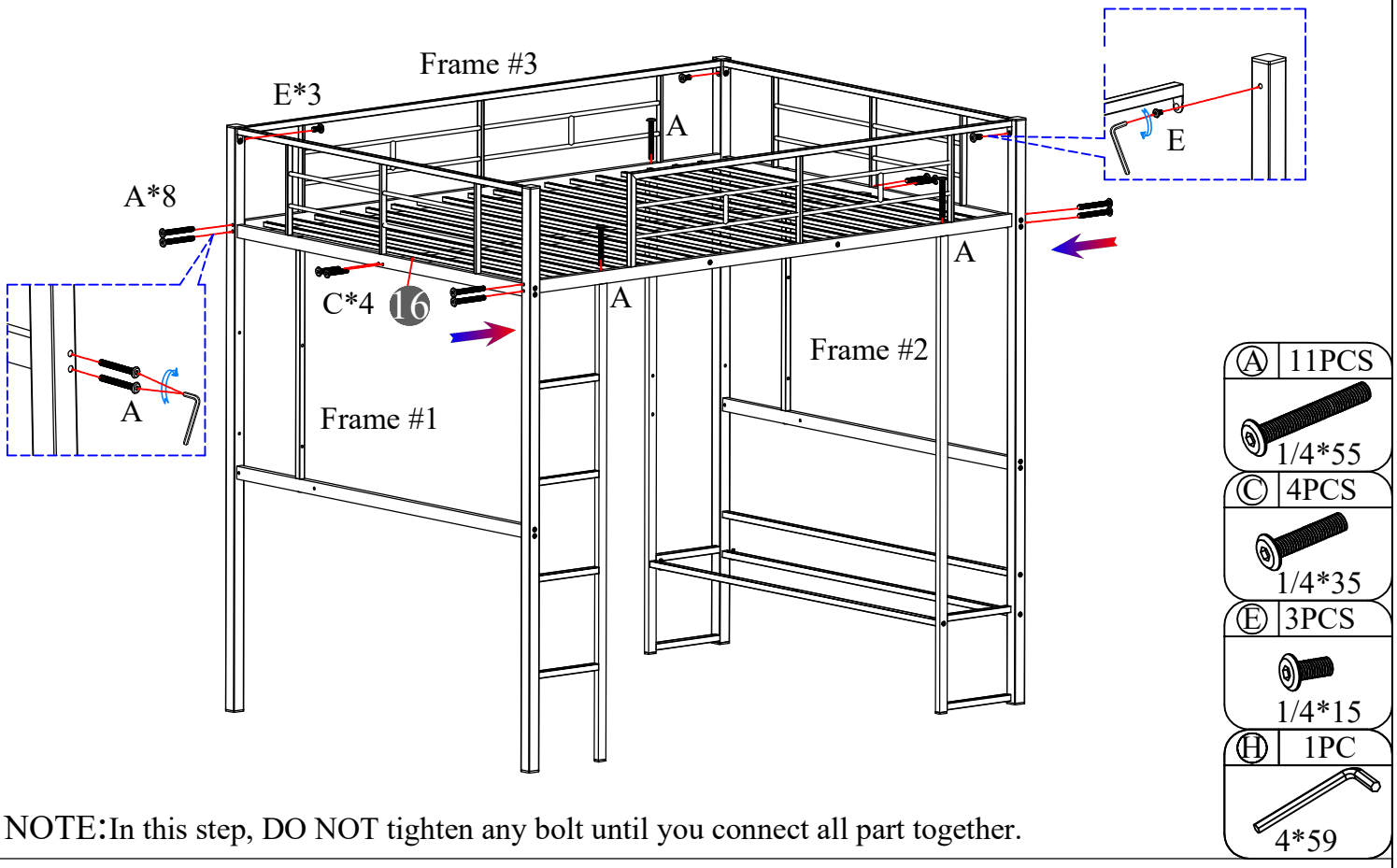

NOTE:In this step, DO NOT tighten any bolt until you connect all part together.

STEP 5 : Following below illustration Assembly Frame # 5.
Using hardware #A, #C connect Frame #4 with #7, #11 to complete Frame #5.

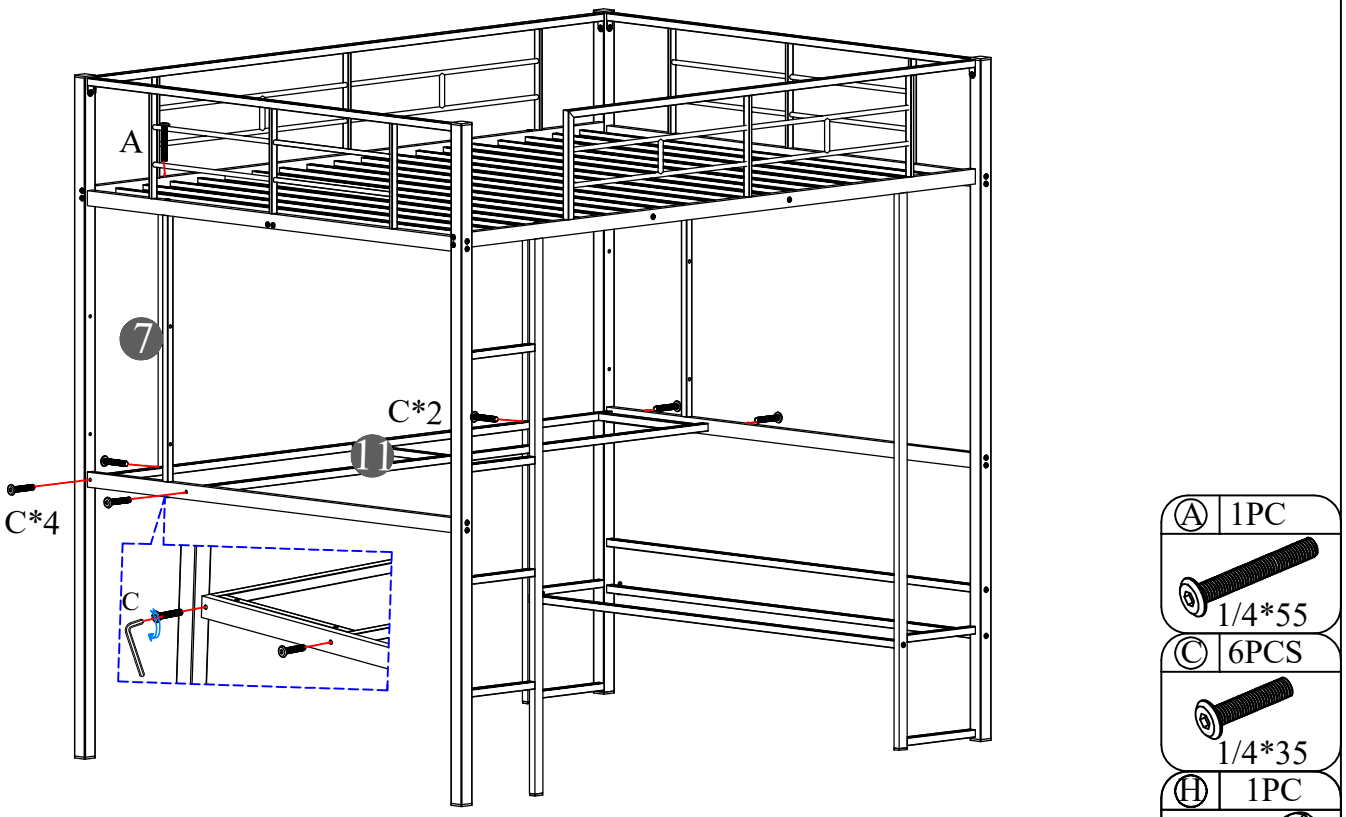

NOTE:In this step, DO NOT tighten any bolt until you connect all part together.

LOFT BED
ASSEMBLY INSTRUCTIONS
ITEM MF199509/199510

STEP 6 : Following below illustration Assembly Frame # 6.
Using hardware #B, #D connect Frame #5 with #17, #18, #19 to complete Frame #6.

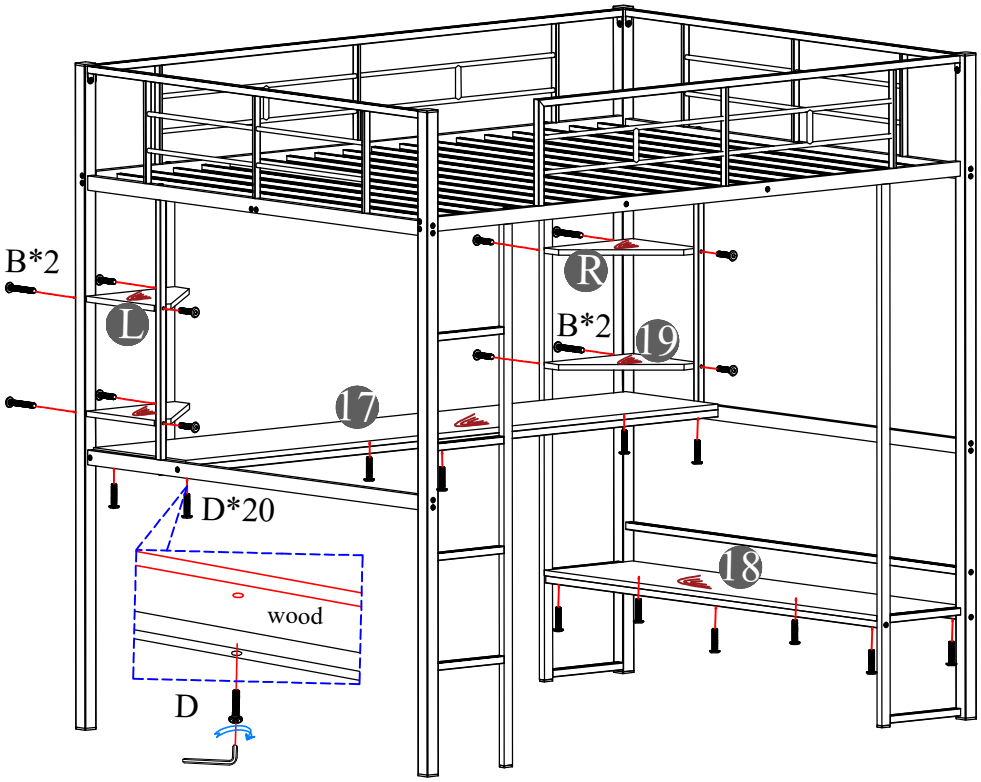

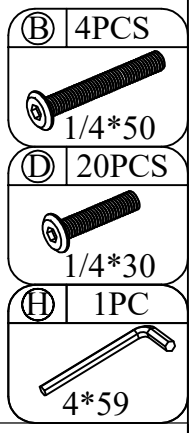

NOTE:In this step, DO NOT tighten any bolt until you connect all part together.

STEP 7 : Following below illustration Assembly Frame # 7.
Using hardware #I connect Frame #6 with Wall to complete .

COMPLETED LOFT BED

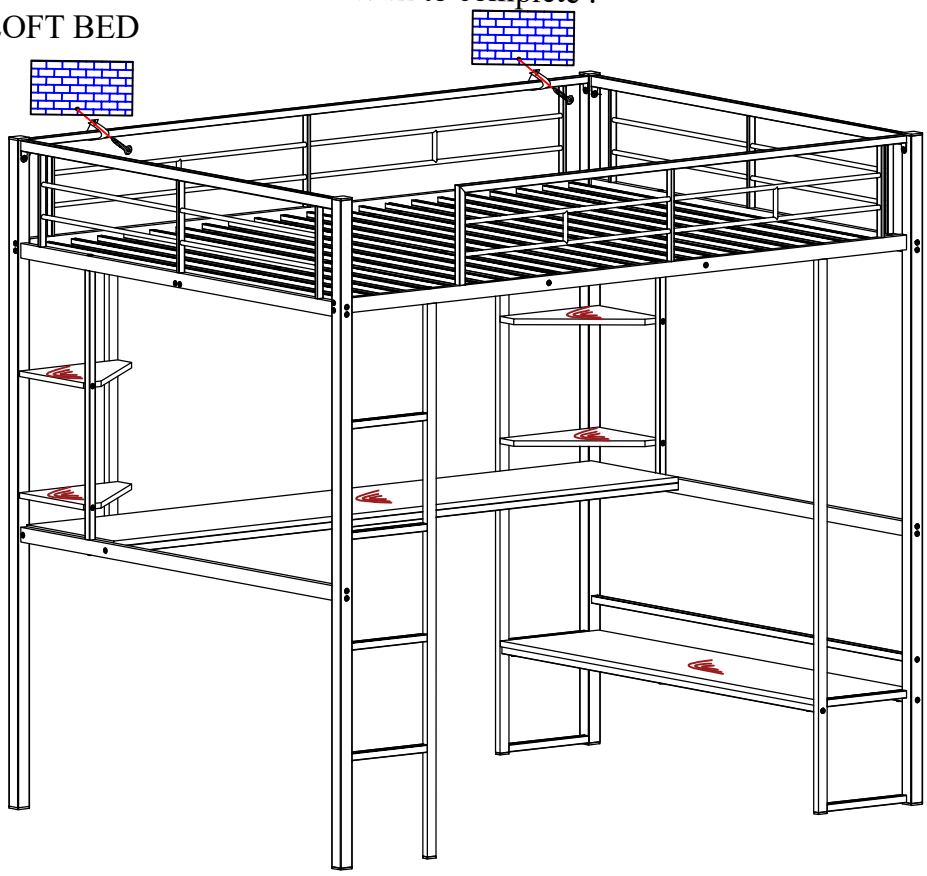

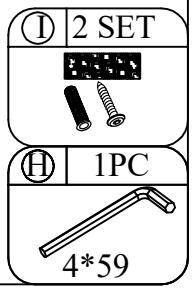

NOTE: Tighten all step before using. Thank you.