ENGLISH

FORNO®
Alta Qualita



DUAL FUEL RANGE
MODEL NUMBER SERIES
JKD36A1/JKD48A1

FFSGS6113-36WHT | FFSGS6113-36BLK | FFSGS6113-48WHT | FFSGS6113-48BLK

INSTRUCTION MANUAL

Read these instructions carefully before using your appliance, and keep it carefully.
If you follow the instructions, your appliance will provide you with many years of good service.

07/2024

Contents

Customer Care 4

Safety Instructions ..... 5~7

Unpackage instruction 8

Installation Instructions ..... 9~18

Cooktop Operation ..... 19~21

Oven Operation ..... 22~23

Broiler Operation 24

Griddle Operation 25

Care & Cleaning ..... 26~27

Troubleshooting 28

Ng to LPG conversion..... 29-32

! WARNING

If the information in this manual is not followed exactly, a fire or an explosion may result causing property damage, personal injury or even death.

Do not store or use gasoline, liquid propane cylinder or other flammable vapors and liquids in the vicinity of this appliance.

What to do if you smell gas?

Do not try to light any appliance.

Do not touch any electrical switch.

Do not use any phone in your residence.

Immediately call your gas supplier from a neighbor's phone. Follow the gas supplier's instructions.

If you cannot reach your gas supplier, call the fire department.

For installation and service of your range product, it must be performed by a licensed installer, an approved service agency or your gas supplier.

DUAL FUEL RANGE

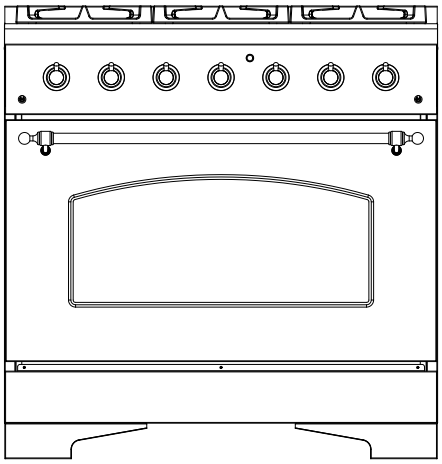

MODEL NUMBER SERIES

JKD36A1

FFSGS6113-36WHT

FFSGS6113-36BLK

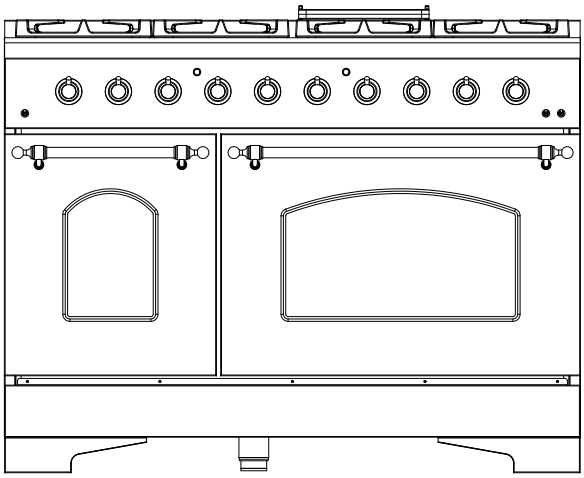

MODEL NUMBER SERIES

JKD48A1

FFSGS6113-48WHT

FFSGS6113-48BLK

Customer Care

Thank you for purchasing a Frono product. Please read the entire instruction manual before operating your new appliance for the first time. Whether you are an occasional user or an expert, it will be beneficial to familiarize yourself with the safety practices, features, operation and care recommendations of your appliance.

Both the model and serial number are listed inside the product. For warranty purposes, you will also need the date of purchase .

Product Information

Model Number : _____

Serial Number : _____

Date of Purchase :_____

Purchase Address And Phone : _____

_____

_____

Service Information

Use these numbers in any correspondence or services calls concerning your product.

If you received a damaged product, immediately contact Forno.

To save time and money, before you call for serviced, check the troubleshooting guide. It listed the causes of minor operation problems that you can correct yourself.

Model And Serial Number

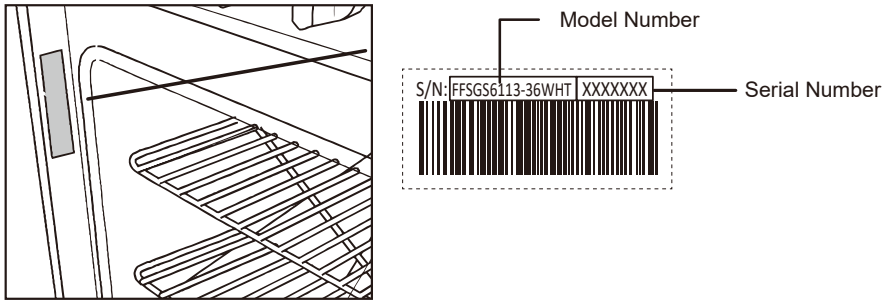

"Need some quick help? Simply scan the qr code and get access to our fast support form. We're always here to assist you with any questions or concerns you may have. So, don't hesitate to reach out!"

Services in Canada and Untied States

Keep the instruction manual handy to answer your questions. If you don't understand something or need more assistance, please visit our website for fast support. Please provide us your name, number, address,serial number of the product that troubleshooting, proof of purchase, and a short description of the issue. A customer service representative will contact you as soon as possible. All warranty work needs to be authorized by FORNO customer service. All our authorized service providers are carefully selected and rigorously trained by us.

SAFETY INSTRUCTIONS

Definitions

This is a safety alert symbol. It will alert you to potential personal or property safety hazards. Obey all safety messages to avoid any property damage, personal injury or death.

WARNING

WARNING indicates a potentially hazardous situation which, if not avoided, could result in serious injury or death.

CAUTION

CAUTION indicates a moderate hazardous situation which, if not avoided, could result in minor or moderate injury.

CAUTION

CAUTION – when used without the safety alert symbol, indicates a potentially hazardous situation which, if not avoided, could result in property damage.

IMPORTANT

IMPORTANT used for installation, operation and maintenance information that are not related to safety.

If the information in this manual is not followed exactly, a fire or an explosion may result causing property damage, personal injury or even death.

Do not store or use gasoline, liquid propane cylinder or other flammable vapors and liquids in the vicinity of this appliance.

Save this manual for future references.

SAFETY INSTRUCTIONS

What to do if you smell gas?

- Do not try to light any appliance.
- Do not touch any electrical switch.
- Do not use any phone in your residence.
- Immediately call your gas supplier from a neighbor's phone. Follow the gas supplier's instructions.
- If you cannot reach your gas supplier, call the fire department.

IMPORTANT

The installation and service of your range product must be performed by a licensed installer, an approved service agency or your gas supplier.

⚠ WARNING



⚠ WARNING

Tip-Over Hazard

A child or adult can tip the range and be killed.

Verify the anti-tip bracket has been installed.

Ensure the anti-tip bracket is engaged when the range is moved.

Do not operate the range without the anti-tip bracket in place.

Failure to follow these instructions can result in death or serious burns to children and adults.

Show specific manufacturer illustrations for checking installation/engagement of anti-tip brackets.

CONSUMER INFORMATION — THE INSTALLER SHALL NOT REMOVE

Before removing label, ensure anti-tip bracket is properly installed.

To reduce the risk of tipping the appliance, the appliance must be secured by properly installed anti-tip device packed with the appliance.

All ranges can tip and cause injuries.

Install anti-tip device packaged with range

Follow all Installation Instructions.

Make sure the anti-tip bracket is installed:

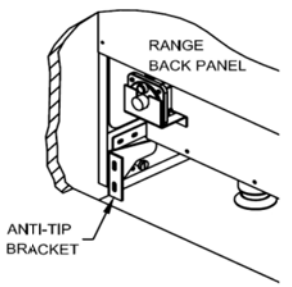

Slide range forward.

Make sure the anti-tip bracket is securely attached to the wall behind the range.

Safely tilt the front of the range upward slightly and move back against wall, Making sure the pin slides under bracket.

SAFETY INSTRUCTIONS

WARNING

Do not store or use gasoline, liquid propane cylinder or other flammable vapors and liquids in the vicinity of this appliance.

The installation and service of your range must be performed by a qualified installer, an approved service agency or the gas supplier.

Gas appliances can cause minor exposure to four of these substances, namely benzene, carbon monoxide, formaldehyde and soot, caused primarily by the incomplete combustion of natural gas fuel. When operating your range on natural gas, the flames from the burners should be blue in color. In addition, the flames should be stable, free of yellow tipping, excessive noise and lifting. However, this yellow tipping should be restricted to the primary flame kernels only. Properly adjusted burners, indicated by a bluish rather than a yellow flame, will minimize incomplete combustion. Exposure to those substances can be minimized by venting with an open window or use of a ventilation fan or hood.

ELECTRICAL GROUNDING INSTRUCTIONS

IMPORTANT

This indoor cooking appliance is equipped with a three-prong (grounding) plug for your protection against shock hazard and should be plugged directly into a properly grounded three-pronged receptacle. DO NOT cut or remove the grounding prong from this plug.

UNPACKING AND HANDLING

WARNING

Extremely Heavy.

Proper equipment and adequate manpower when move the range to avoid personal injury or damage to the unit or the floor. The unit is heavy and rests on adjust able steel legs.

Failure to follow this advice may result in damage or personal injury.

WARNING

DO NOT lift range by the oven door handles !!



CORRECT



INCORRECT



INCORRET

INSTALLATION AND OPERATION INSTRUCTIONS

To ensure proper and safe operation, read all instructions before using the product. Install or locate the product only in accordance with the provided Installation Instructions.



- All servicing should be performed to a qualified technician.
- Do not attempt to adjust, repair, service or replace any part of your appliance unless it is specifically recommended in this guide.
- Do not use the range for warming or heating the room.
- Do not leave children alone or unattended in the area where the range is in use. Never allow them to sit or stand on any part of the range. Do not let children play with the range.
- Have the technician show you the location of the gas shut off valve and how to shut it off in an emergency situation.
- Always disconnect power to appliance before any type of servicing.
- Do not use abrasive or caustic cleaners or detergents on this appliance. They may cause permanent damage to the surface.
- When cooking, set the burner controls so that the flame heats only the bottom of the utensil and does not overlap at the sides of the utensil.
- Utensils (pots and pans) that conduct heat slowly, i.e. glass pots, should be used in conjunction with burner flames at a low or medium setting.
- Turn off all controls and wait for appliance parts to cool down before touching them. Do not touch the burner grates or surrounding areas until cool.
- Do not use water on grease fires.
- Clean appliance with caution.
- Always turn pot handles to the side or back of the range. Do not turn handles towards the area where they can be easily burned. Handles should not extend over the adjacent burners.
- Use the range only for cooking tasks as outlined in this manual. When using the range, do not touch the grates, burner caps, burner bases, or any other parts in proximity to the flame. These components may be hot enough to cause burns.
- Use dry pot holders. Moist or damp pot holders on hot surfaces may result in burns from steam.
- Remove pot holder away from hot surface areas.
- Do not use a towel or other bulky cloth.
- Do not heat unopened food containers. Build up of pressure may cause the container to explode and result in injury.
- During and after use, do not touch interior surfaces of the oven until cool.

INSTALLATION INSTRUCTIONS

IMPORTANT

Keep appliance area clear and free from combustible materials, gasoline, and other flammable vapors.

Gas Supply Requirements

Installation of this range must conform with local codes, or in the absence of local codes, the National Fuel Gas Code, ANSI Z223.1 / NFPA 54. In Canada, installation must conform to the current natural Gas Installation /code, CAN 1-1.1-M81 and with local codes where applicable. This range has been design-certified according to ANSI Z21.1b-2012 latest edition.
A statement of the maximum gas supply pressure in accordance with the inlet pressure rating of the gas appliance pressure regulator supplied.

MINIMUM GAS SUPPLY PRESSURE TO APPLIANCE FOR LP GAS---14.0 IN.W.C.
MINIMUM GAS SUPPLY PRESSURE TO APPLIANCE FOR NG --- 6 IN.W.C.
APPLIANCE REGULATOR IS SET AT 5.0 IN. W.C. OUTLET PRESSURE.

Do not obstruct the flow of combustion air into the range and ventilation air away from the range.

Ventilation: it is recommended that the unit be operated with an oven head, vented exhaust hood of sufficient size and capacity.

Before installing the range, you must locate and secure the included anti-tip bracket to the wall for your range.

⚠CAUTION

The use of cabinets for storage above the appliance may result in a potential fire hazard. Combustible items may ignite; metallic items may become hot and cause burns. If a cabinet storage is to be provided, the risk can be reduced by installing a range hood that projects horizontally a minimum of 5" (12.7cm) beyond the bottom of the cabinets.



The appliance shall not be used for space heating. This information is based on safety considerations. All openings in the wall behind the appliance and in the floor under the appliance shall be sealed.

INSTALLATION INSTRUCTIONS

Dimensions and Clearances

The range may be installed flush to the rear wall. You may install a non-combustible material on the rear wall above the range and up to the vent hood. It is not necessary to install non-combustible materials behind the range below the counter top height.

The minimum distance from the side of the range above the counter top to combustible sidewalls must be at least 10 inches.

INSTALLATION INSTRUCTIONS

FFSGS6113-36WHT
FFSGS6113-36BLK

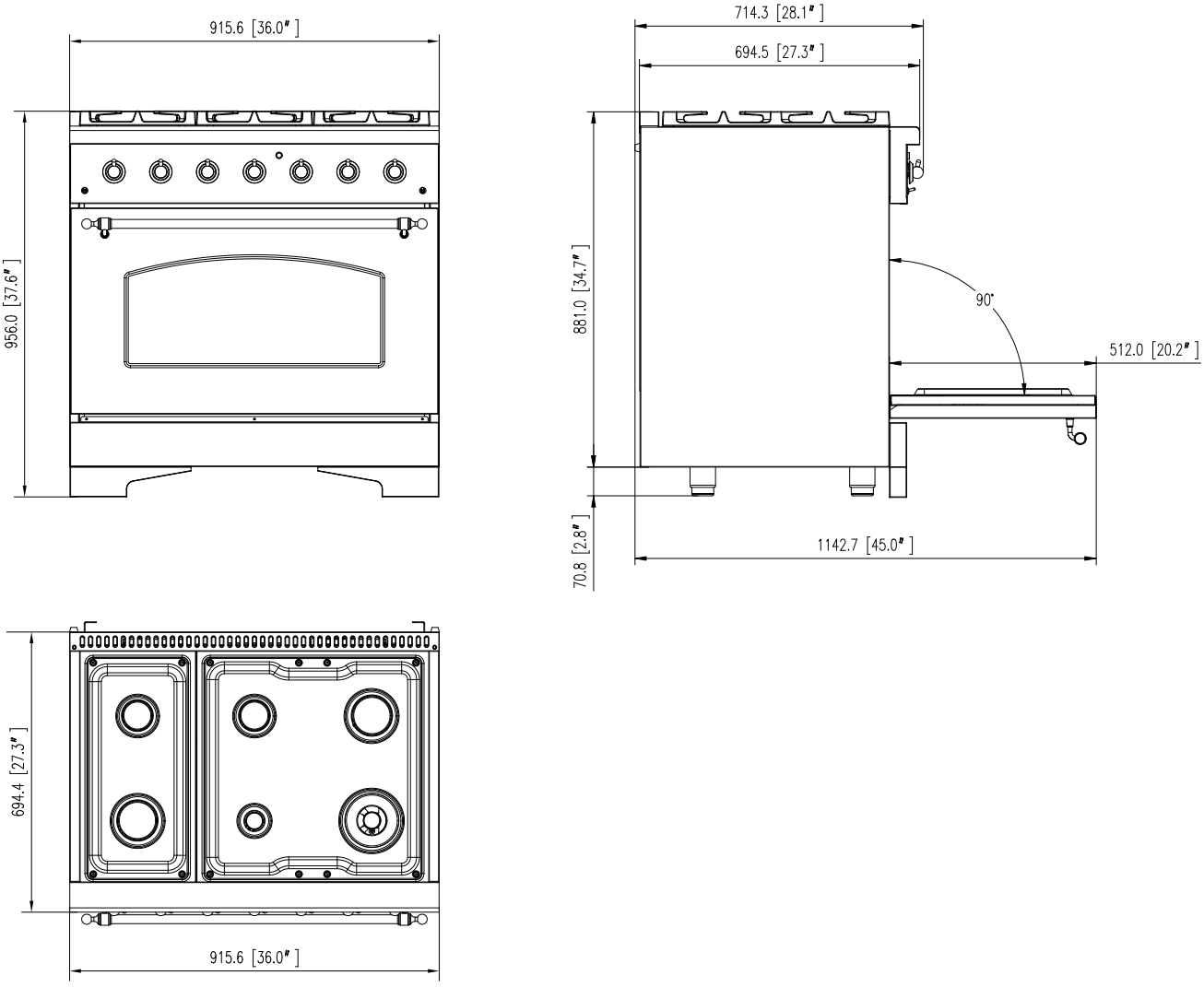

Product features may not match. Image meant for dimension reference only.

FFSGS6113-48WHT
FFSGS6113-48BLK

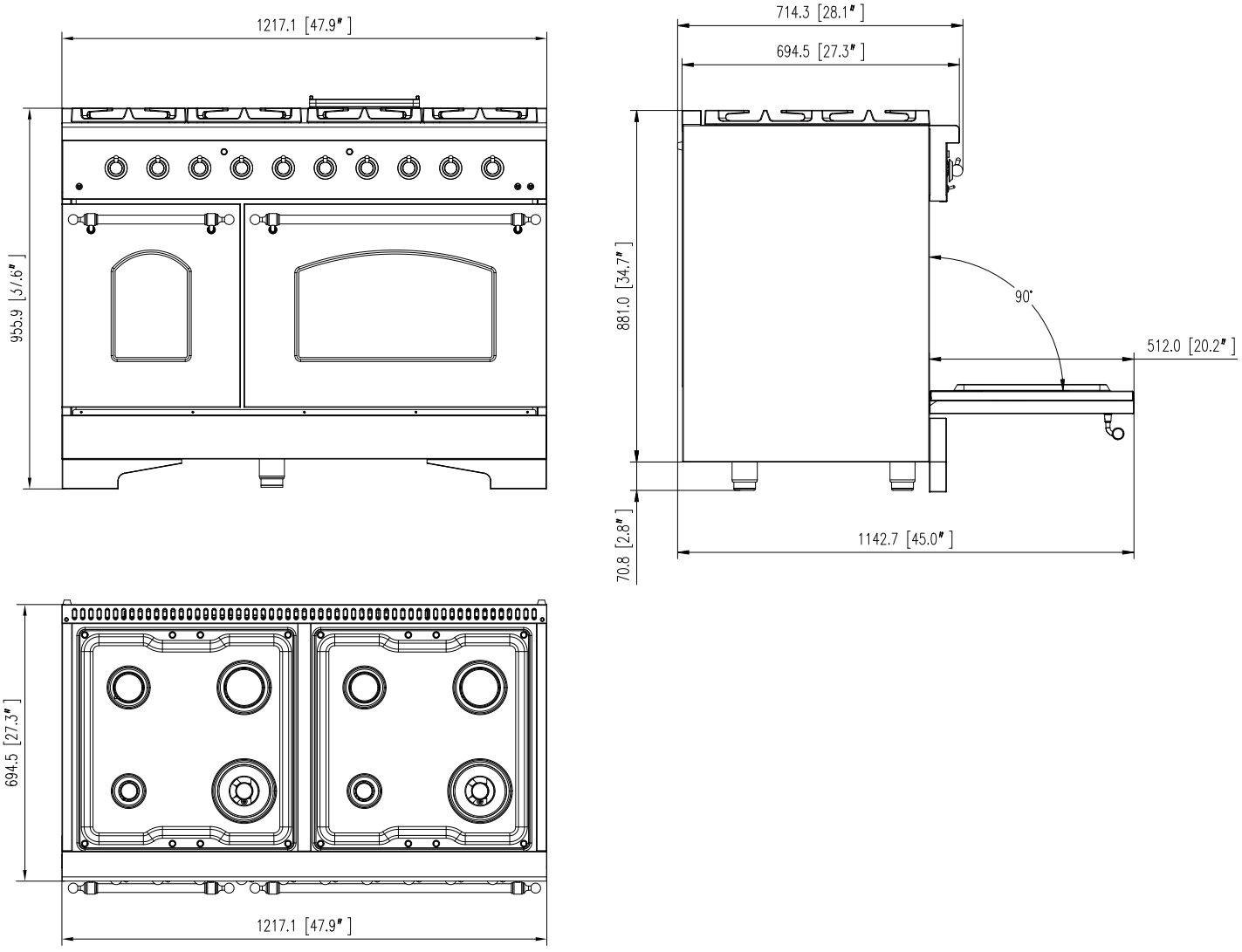

*Product features may not match. Image meant for dimension reference only.

Dimensions and Clearances

FFSGS6113-36WHT
FFSGS6113-36BLK

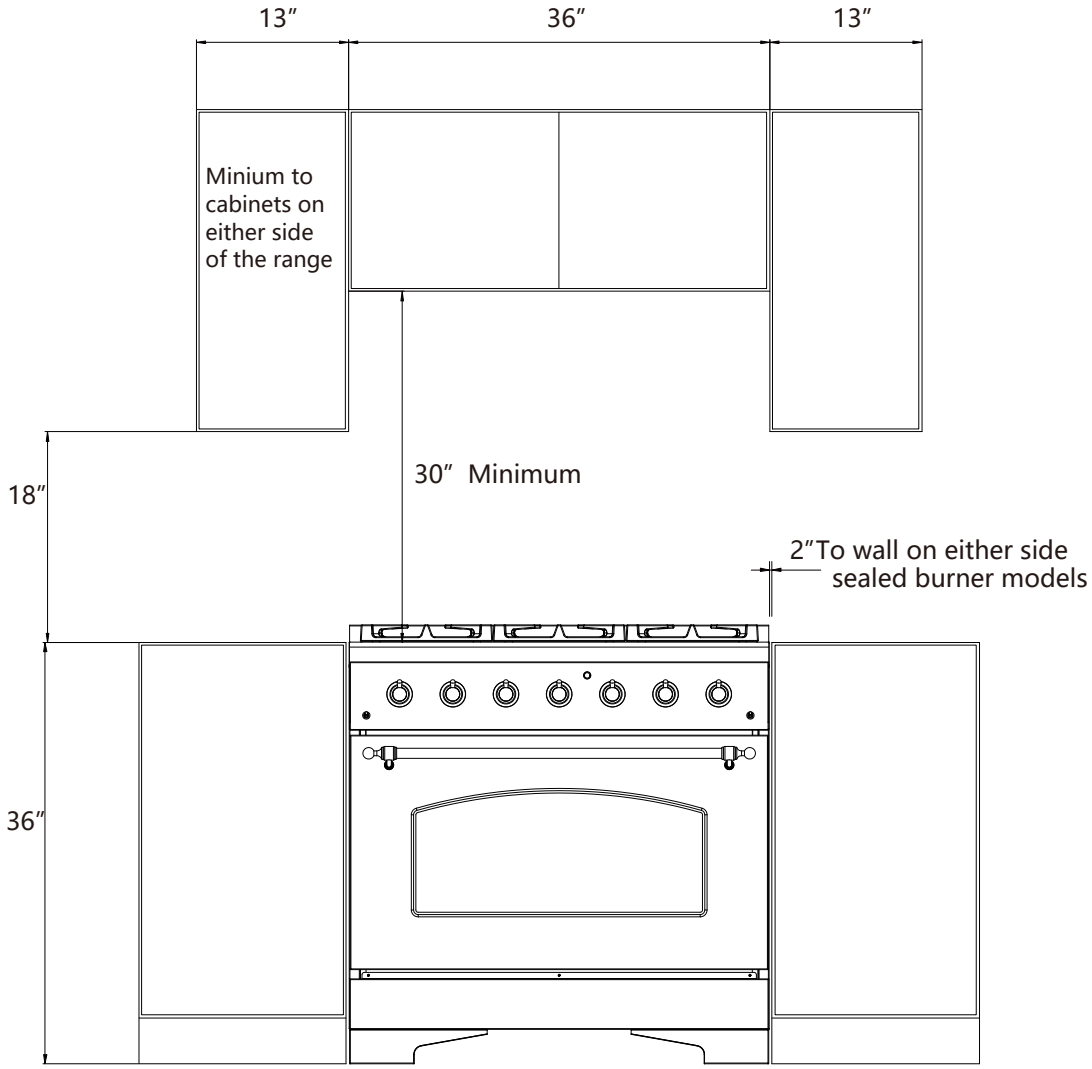

FFSGS6113-48WHT
FFSGS6113-48BLK

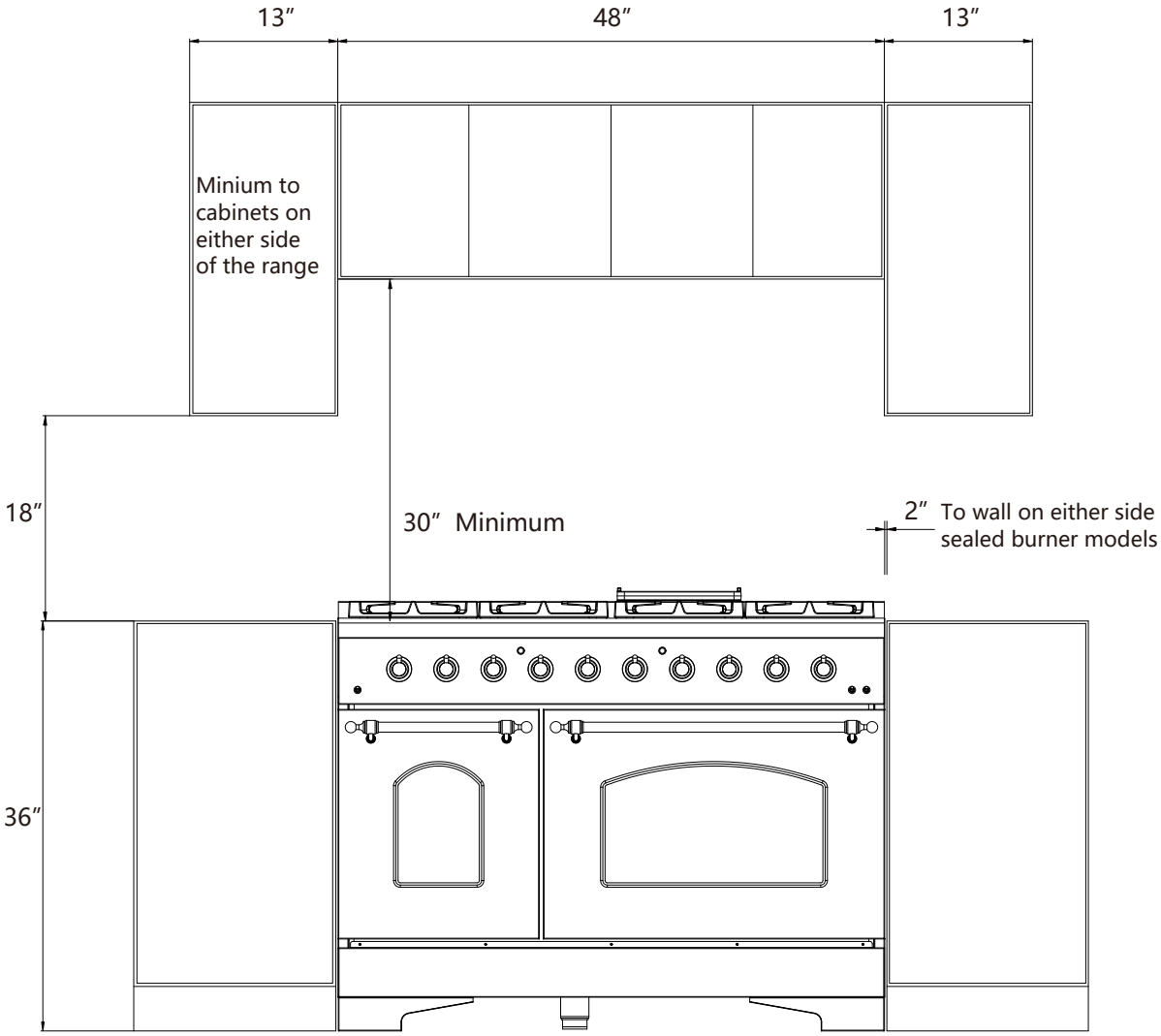

Installation Instructions

Before using your range

1.Remove all packaging material.

2.Check to make sure you have all of the accessories listed below

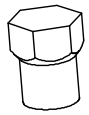 FFSGS6113-36: 0.89*2+0.53，1.0，0.74，0.90*2，1.16 FFSGS6113-48: (0.89*2+0.53)*2，1.0*2，0.74*2，0.90*2	LPG injector	FFSGS6113-36	1 set
		FFSGS6113-48	1 set
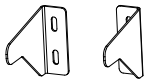	Anti-tip bracket and screws		1 set
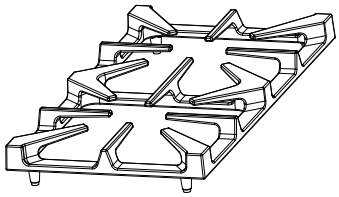	Burner Grills	FFSGS6113-36	3 pieces
		FFSGS6113-48	4 pieces
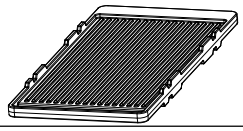	Cook plate(Griddle)	FFSGS6113-48	1 piece
	oven door handle	FFSGS6113-36	1 piece
	Burner & Cap (6000BTU)	FFSGS6113-36	1 set
		FFSGS6113-48	2 sets
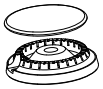	Burner & Cap (9000BTU)	FFSGS6113-36	1 set
		FFSGS6113-48	2 sets
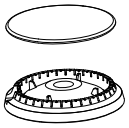	Burner & Cap (12000BTU)	FFSGS6113-36	1 set
		FFSGS6113-48	2 sets
	Burner & Cap (15000BTU)	FFSGS6113-36	1 set
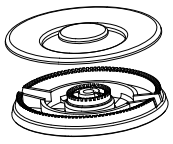	Burner & Cap (20000BTU)	FFSGS6113-36	1 set
		FFSGS6113-48	2 sets
	Knob	FFSGS6113-36	7 pieces
		FFSGS6113-48	10 pieces
	Serial Number Sticker & Instruction Manual		1 set
	Screw Driver	FFSGS6113-36	1 piece

Installation

Electric Power Supply Requirements

Your range must be electrically grounded in accordance with local codes or, in the absence of local codes, in accordance with the National Electrical Code (ANSI/NFPA 70, latest edition). In Canada, electrical grounding must be in accordance with the current CSA C22.1 Canadian Electrical Code Part 1 and/or local codes. A copy of this standard may be obtained from: National Fire Protection Association, 1 Batterymarch Park, Quincy, Massachusetts 02269-9101.

The power supply must be the correct polarity. Reverse polarity will result in continuous sparking of the electrodes, even after flame ignition. If there is any doubt as to whether the power supply has the correct polarity or grounded, have it checked by a qualified electrician.

Use 240V, 60Hz, and properly grounded branch circuit protected by a 40 amp circuit breaker or time delay fuse.

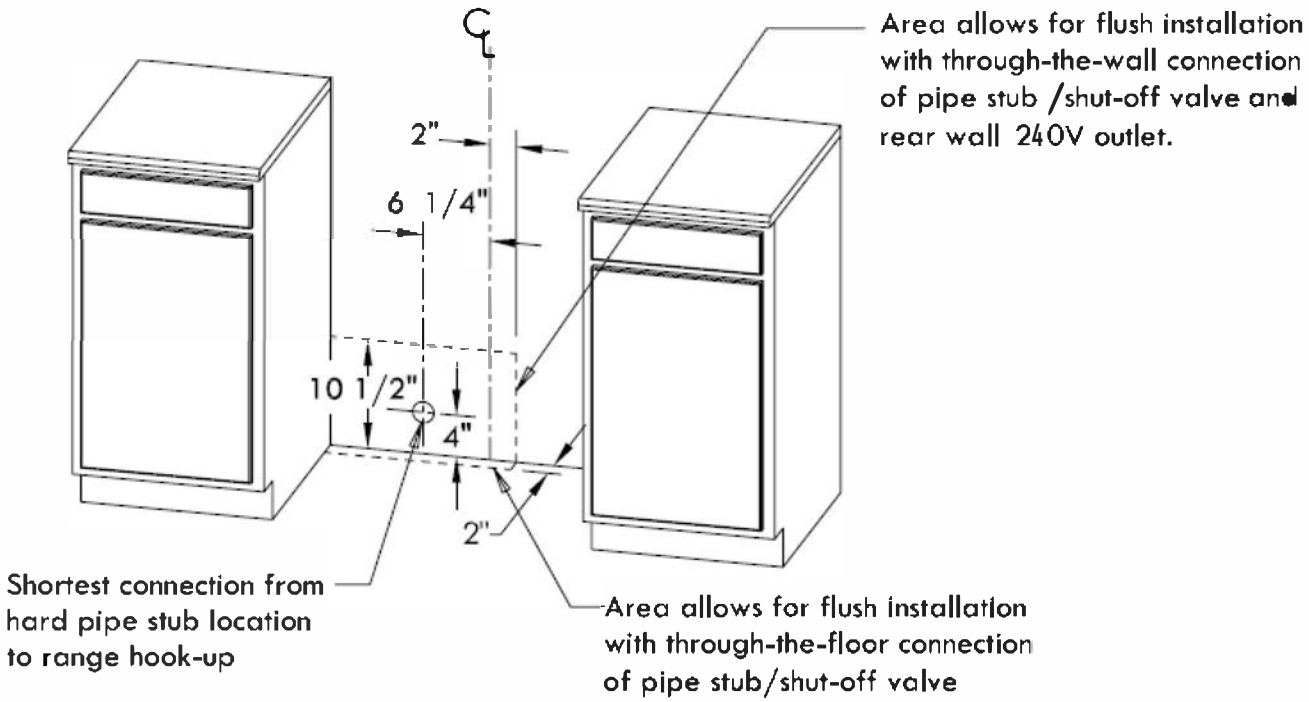

WARNING

Electrical Grounding Instructions: this indoor gas cooking appliance is equipped with a four- prong (grounding) plug for your protection against shock hazard and should be plugged directly into a properly grounded four -pronged receptacle.

Do Not cut or removes the grounding prong from the plug.

Caution Label all wires prior to disconnection when servicing controls. Wiring errors can cause improper and dangerous operation. Verify proper operation after servicing.

INSTALLATION INSTRUCTIONS

Grounding

- The power cord is equipped with a four - prong (grounding) plug which mates with a standard four - prong grounding wall receptacle to minimize the possibility of electrical shock hazard from the range.
- All cord connected appliance shall include instructions relative to location of the wall receptacle and a warning to the user to disconnect the electrical supply before serving the appliance.
- Where a standard three-prong wall receptacle is encountered, it is the responsibility and obligation of the customer to have it replaced with a properly grounded four - prong wall receptacle. Do not cut or remove the grounding prong from the power cord.

Connect Range to Gas Supply

- Install a manual gas line shut-off valve in the gas line in an easily accessed location outside the range in the gas piping external to the appliance for the purpose of turning on or shutting off gas to the appliance.

- Install male ½" flare union adapter to ½" NPT internal thread elbow at inlet of regulator. On models equipped with standard twin burners, install the male pipe thread end of the ½" flare union adapter to the ½" NPT internal thread at inlet of pressure regulator. Use a wrench on the regulator fitting to avoid damage.

- Install male ½" or ¾" flare union adapter to the NPT internal thread of the manual shut-off valve, taking care to secure the shut-off valve to keep it from turning.

- The gas supply pressure for checking the regulator setting is 6in (Natural Gas) and 11inch（LP gas）connect flexible gas line connector to the regulator on the range. Position range to permit connection at the shut-off valve.

- When all connections have been made, check that all range controls are in the "off" position and turn on the main gas supply valve.

- Leak testing of the appliance shall be conducted according to the manufacture's instructions .Use some soap water (50% water and 50% soap) or a leak detector at all joints and connections to check for leaks in the system. Do not use a flame to check for gas leaks.
- The appliance must be isolated from the building's gas supply piping system by closing its individual manual shut-off valve during any pressure testing of the gas supply piping system at test pressure equal to or less than ½ psig (3.5kPa).

Hood/Composite Overlay Install

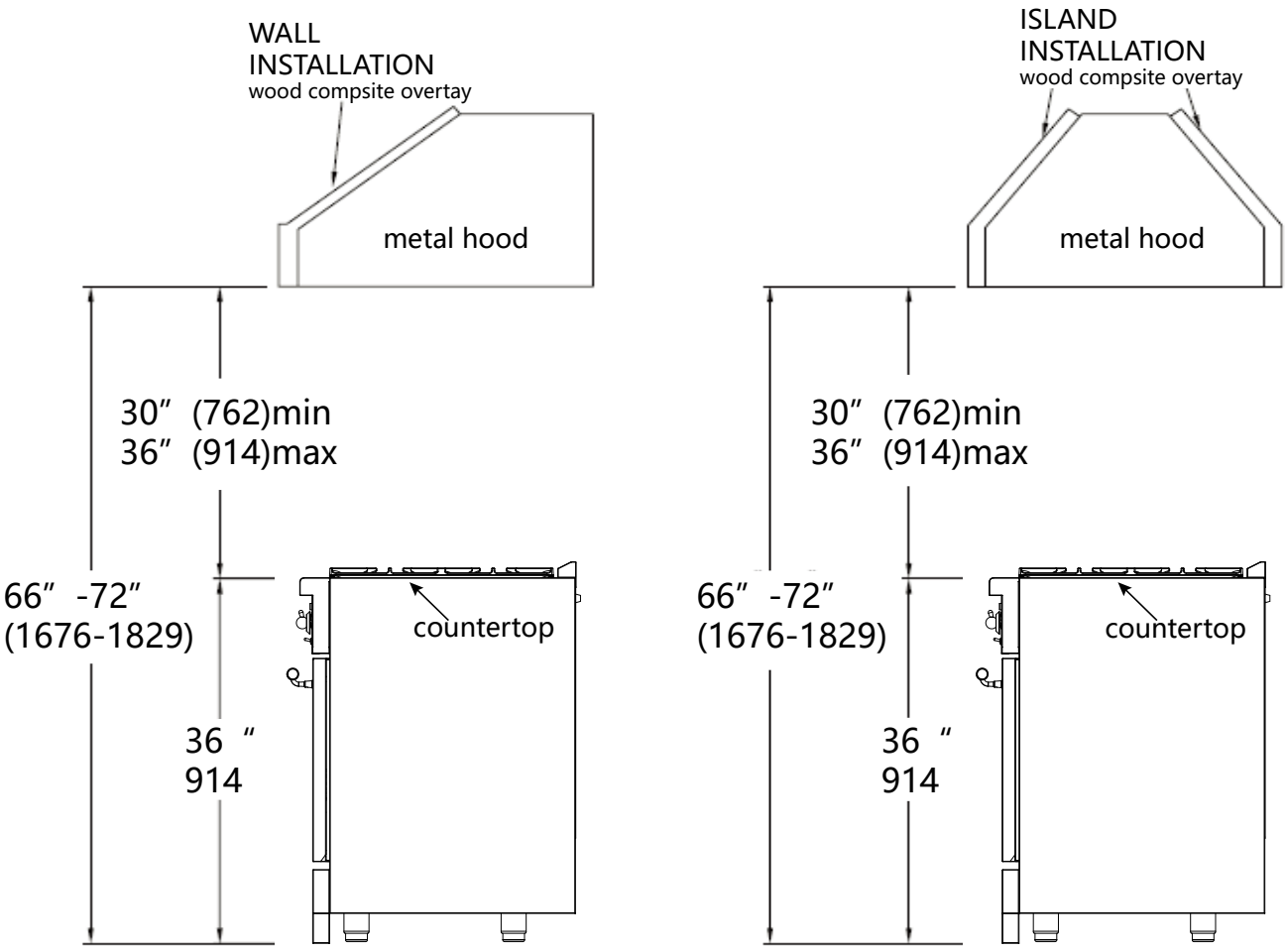

The bottom of the hood should be 30″ min. to 36″ above the counter top. This would typically result in the bottom of the hood being 66″ to 72″ above the floor. These dimensions provide safe and efficient operation of the hood.

After Installation:

Check ignition of cooktop burners.

Check the air shutter adjustment – sharp blue flame, with no yellow tipping or lifting flames.

Check ignition of oven burner.

Visually check tubular burner (oven burner) re-ignition to be sure both rows of burner ports are relighting each time.

Check for gas leaks at all gas connections (using a gas detector, never a flame).

Check oven bake and convection bake function.

COOKTOP OPERATION

Surface Burner Ignition

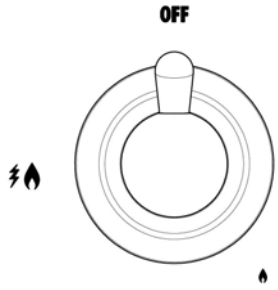

Push to release gas.

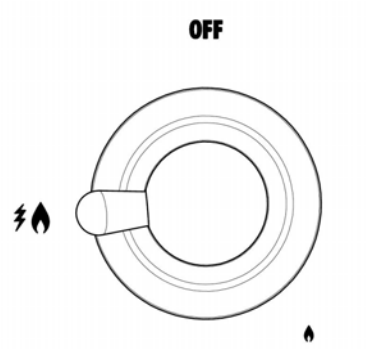

Turn to Ignite and 'Hi' position.

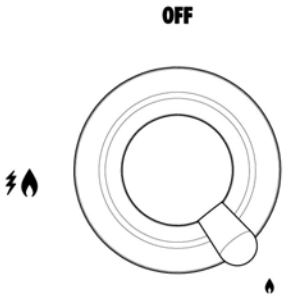

Adjust to appropriate flame height.

To light the surface burners, push and turn the appropriate control knob counter clockwise to a "Hi" position. You will hear a clicking noise – the sound of the electric spark igniting the burner.

Once burner ignition has been achieved, turn the burner control knob to adjust the flame size. If the knob stays at "Hi", it will continue to click.

NOTE: When one burner is turned to the "Hi" position, all the burners will spark. Do not attempt to disassemble or clean around any burner while another burner is on. Do not touch any burner cap, burner base, or igniter while the igniters are sparking.

Heat Settings:

Hi	Ignites the burners.
Simmer	Melting small quantities, steaming rice, warming food, melting chocolate or butter.
Low	Melting large quantities.
Low-Medium	Low-temperature frying, simmering large quantities, heating milk, cream sauces, gravies.
Medium	Sautéing and browning, braising, pan-frying, maintaining slow boil on large quantities.
Medium – Hi	High-temperature frying, pan boiling, maintaining slow boil on large quantities.
Hi	Boiling liquid quickly, deep frying.

Cooktop Operation

Simmer and Boil

- A smaller flame will give the best simmer results. Small flames offer precise cooking performance for delicate foods, keeping food warm, melting chocolate or butter, and for cooking that need to cook over low heat for a long time.
- The highest (larger) flame settings provide the maximum heat that is available on your range. This setting should be used for heavy cooking loads such as water boiling and pasta cooking.

Flame Size

- When you select the flame size, watch the flame when you turn the knob.
- Any flame larger than the bottom of the cookware is wasted.
- The flame should be steady and blue in color. Foreign material in the gas line may cause an orange flame during initial operation.

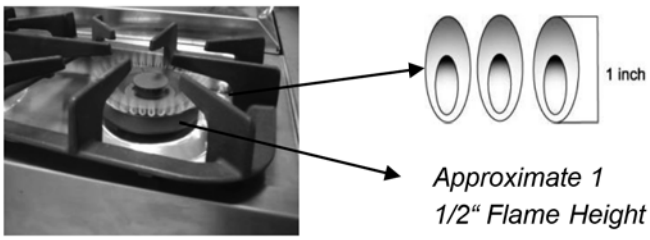

Power Failure

- If the gas does not ignite within four seconds, turn off the valve and allow at least five minutes for any gas to dissipate. Repeat the lighting procedure.
- If the power fails, the surface burners can be lighted manually. Hold a lighted match near a burner and turn knob counterclockwise to “HI”. After burner lights, turn knob to setting.

Cooktop

- To prevent the cooktop from discoloring or staining, clean cooktop after each use, and wipe up acidic or sugary spills as soon as the cooktop has cooled.
- The sealed burners of your range are not secured to the cooktop and are designed to be removed. Boil overs or spills will not seep underneath the cooktop. The burners should be cleaned after each use.

Cooktop Operation

Oven Vent

- Do not block the ducts at the rear of the range when cooking in the oven. It is important that the flow of hot air from the oven and fresh air into the oven burner never be interrupted. Avoid touching the vent opening or nearby surfaces during oven or broiler operation – they may become hot.

WARNING

FOOD SAFETY

According to the United States Department of Agriculture: DO NOT hold foods at temperatures between 40°F to 140°F more than 2 hours. Cooking raw foods below 275°F is not recommended.

WARNING

Never use this appliance as a space heater to heat or warm the room, Doing so many result in carbon monoxide poisoning and overheating of the oven. Never use this appliance as a storage space and storage cabinet areas

WARNING

Never use this appliance doors or drawers such as stepping.
Leaning or setting on the doors or drawers, may result in hazards and injuries

Burner Grates

1. The grates must be properly positioned before cooking. Improper installation of the grates may result in scratching of the cooktop and / or poor combustion.
2. Do not operate the burners without a pan or utensil on the grates

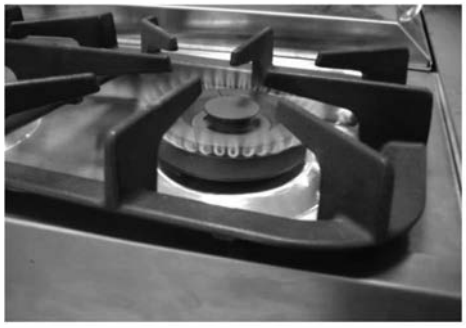



Oven Operation

WARNING

Never cover any slots, holes or passages in the oven bottom or cover an entire rack with materials such as aluminum foil. Doing so blocks air flow through the oven and may cause carbon monoxide poisoning. Aluminum foil lining may also trap heat, causing a fire hazard. Do not use Aluminum Foil on any porcelain surface. Doing so will cause damage the porcelain that affect the life of the porcelain

Oven Function

Natural Airflow Bake occurs when heat is transferred into the oven from the bake burners in the bottom of the oven cavity. Heat is then circulated by natural airflow. This is a traditional bake setting.

Infrared Broil

The broil burner is located at the top of the oven. This burner heats the metal screen until it glows. The glowing screen produces the infrared heat, searing the outside of broiled foods and sealing in juices.

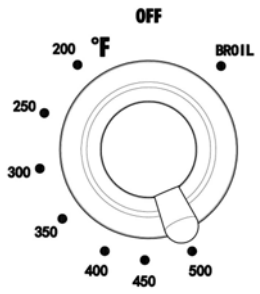

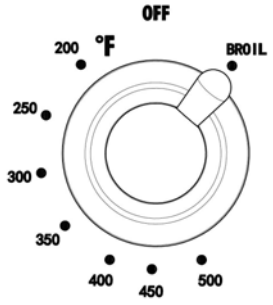



Convection Bake

Heat is transferred from the bake burners in the bottom of the oven cavity to the oven cavity itself. The convection fan in the rear of the oven then circulates it. This convection process provides more even heat distribution throughout the oven cavity. Multiple rack use is possible for the large baking jobs. Convection cooking is faster, can be accomplished at lower temperatures and provides more even temperatures than regular cooking.

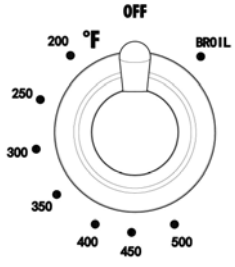

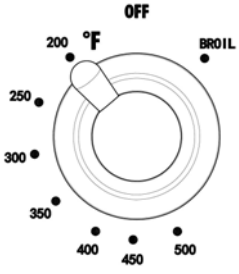

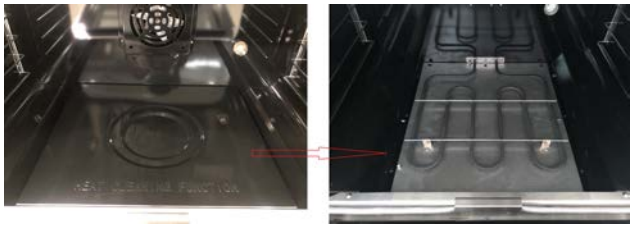

Convection Roast

The convection fan circulates the heated air evenly over and around the food. Using the cover and broiler pan provided, heated air will be circulated over the around the food being roasted. The heated air seals in juices quickly for a moist and tender product, while at the same time creating a rich golden brown exterior. When convection roasting, it is important that you use the broiler pan for best convection roasting results. The pan is used to catch grease spills and has a cover to prevent grease splatters.

Convection Defrost

With temperature control off, the motorized fan in the rear of the oven circulates air. The fan accelerates natural defrosting of the food without heat. To avoid illness and food waste, do not allow defrost food to remain in the oven for more than two hours without being cooked.

Convection Dehydrate

With the temperature control on 175°F, warm air is radiated from the bake burners in the bottom of the oven cavity and is circulated by a motorized fan in the rear of the oven. Over a period of time, the water is removed from the food by evaporation. Removal of water inhibits growth of microorganisms and retards the activity of enzymes.



BEFORE BAKING OR BROILING

The oven and broiler should be turned on to burn off the manufacturing oils. Turn the oven on to 450˚F (230˚C) for 20 to 30 minutes; then turn the oven knob to "Broil" for the same length of time. You may wish to turn on the ventilator above your range at this time

Broiler Operation

Note: Door must be closed during broiling operation.

Broiling is a method of cooking tender cuts of meat directly under the infrared broiler in the oven . Broiling in the oven is accomplished with the oven door closed. It is normal and necessary for some smoke to be present to give the food a broiled flavor.

Preheating

Preheating is suggested when searing rare steaks (Remove the broiler pan before preheating with the infrared broiler. Foods will stick on hot metal). To preheat, turn the “Oven” selector knob to the “Broil” position. Wait for the burner to become hot, approximately 2 minutes. Preheating is not necessary when broiling meat well-done.

To Broil

Broil one side until the food is browned; turn and cook on the second side. Season and serve. Always pull the rack out to the “stop” position before turning or removing food.

Setting Broil

The “Oven” selector knob controls the Broil feature. When broiling, heat radiates downward from the oven broiler for even coverage. The Broil feature temperature is 500˚F (260˚C).

The broil pan and insert used together allow dripping grease to drain and be kept away from the high heat of the oven broiler. **DO NOT** use the broil pan without the insert. **DO NOT cover the broil pan insert with foil.** The exposed grease could catch fire.

To set the oven to Broil:

1. Place the broiler pan insert on the broiler pan. Then place the food on the broiler pan insert
2. Arrange the interior oven rack and place the broiler pan on rack. Be sure to center the broiler pan and position directly under the broil burner. If preheating the broil burner first, position the broiler pan after the broil burner is preheated.
3. Turn selector knob to Broil.

The oven indicator light will remain on until the selector knob is turned to the off position or the temperature control cycles off.

Griddle Operation

Before Using the Griddle

1. Clean the griddle thoroughly with warm, soapy water to remove dust or any protective coating.
2. Rinse with clean water and wipe off to dry with soft, clean, lint-free towel/cloth.
3. A stainless steel cover that is sized to fit on top of the surface when the griddle is not being used is provided. Please note – the cover must be removed before turning the griddle on.
4. Make sure the grease tray is under the front edge of the griddle. Position the tray under the griddle overhang to catch grease or food residue.

Use of the Griddle

1. Push and turn the control knob counter-clockwise to the preferred cooking temperature.
2. Preheat the griddle for 10-12 minutes
3. When the griddle is preheated to the desired temperature, the indicator light will turn on.
4. Butter or cooking oil can be added for more flavor, then place the food to cook.





CAUTION:
The surface of the griddle is hot after use. Please allow sufficient time for the griddle to cool prior to cleaning.

When using the appliance or the first time, the oven and broiler burners should be turned on the burn off the manufacture oils. Turn the oven on the 450℉[230 ℃ for 20 to 30 minutes, then turn the oven control knob to “Broil” for the same length of time. It is recommended to turn on the ventilator above the range at this time

WARNING

Before Baking or Broiling the oven and broiler should be turned on to burn off the manufacturing oils. Turn the oven on to 450°F (230°C) for 20 to 30 minutes; then turn the broiler to “Broil” for the same length of time. You may wish to turn on the ventilator above your range at this time.

Care and Cleaning

Cooktop

- To avoid electrical shock or burns, turn off all controls and ensure the cooktop is cool before cleaning.
- Before cleaning the cooktop, ensure that all burners are turned off and that all components are cool enough to safely touch.
- Do not use harsh or abrasive cleaning agents, waxes, polishes, or commercial cooktop cleaners to clean the cooktop.
- Use only a sponge, soft cloth, fibrous or plastic brush, and nylon pad for cleaning.
- Always dry components completely before using the cooktop.

Control Panel, Door Handle, Control Housing

- Clean the control panel, door handle and control housing with a solution of mild detergent and warm water.
- Do not use abrasive cleaners or scrubbers; they will permanently damage the finish.
- Dry the components with a soft, lint-free cloth.

Oven Window

- Clean all glass surfaces with a solution of mild detergent and hot water. Use a mild glass cleaner to remove fingerprint or smears.
- Dry completely with a soft, lint-free cloth.

Porcelain Surfaces

- Clean oven interior and inner door liners with a solution of mild detergent and hot water. Rinse and dry with a soft cloth. Do not use abrasives or commercial oven cleaners.

Stainless Steel Surfaces

- Do not use any cleaning product containing chlorine bleach.
- Do not use a steel-wool pad; it will scratch the surface.
- Use a hot, damp cloth with a mild detergent. Use a clean, hot, damp cloth to remove soap. Dry with a dry, clean cloth.

Care and Cleaning

Metal Finishes

- Wash with soap and water, glass cleaner, or mild liquid sprays.

Plastic Finishes

- When control panel trim and end caps are cool, clean with soap and water, rinse and dry.
- Use a glass cleaner and soft cloth.

Oven Racks

- Clean oven racks with solution of detergent and hot water. To clean heavy soil, use a scouring pad such as steel wool with plenty of water.

Oven Frame

- Clean with hot water, soap-filled steel-wool pads or cleaners. Rinse well with clean water and dry.

Oven Gasket

- Do not clean the gasket. The fiberglass material of the oven door gasket cannot withstand abrasion.
- It is necessary for the gasket to remain intact.

Replacing the Oven Light

- Turn off the power at the main power supply.
- Remove the lens cover from the housing by pulling straight out.
- To prevent electrical shock or personal injury, make sure the oven and light bulb are cool and power to the oven has been turned off before replacing the light bulb. Make sure the lens cover is in place when using the oven.

Outer Oven Door

- Use soap and water to thoroughly clean the top, sides and front of the oven door. Rinse well. You may also use a glass cleaner to clean the glass on the outside of the door.
- Do not use oven cleaners, cleansing powders of harsh abrasives on the outside of the door.

Inner Oven Door

- Do not allow excess water to run into any holes or slots in the door. Any soap left on the liner causes additional stains when the oven is heated.
- Before you call for service, please review the potential problem / possible causes and remedies shown in the table below.

Troubleshooting

Before you call for service, please review the potential problem / possible causes and remedies shown in the table below.

Nothing works	Oven is not connected to the electrical power.	Have oven connected to a properly sized electrical power supply by a qualified electrician.
	Power supply is not energized.	Have an electrician check the power supply, including the house circuit breaker, wiring and fuses
Top burners do not light or do not burn evenly	Plug on range is not completely inserted in the electrical outlet.	Make sure the unit is properly connected to the power supply
	Burner holes on the side of the burner may be clogged.	Remove the burner heads and clean them. Check the electrode area for burned-on food or grease.
Burner flames very large and yellow.	Burner bezel ports are clogged.	Clean burner bezel ring ports with straightened paper clip, needle, or wire.
	Burner ports or burner caps are not positioned properly.	Remove and carefully re-install burner bezel and caps.
	Cooktop is being operated with the wrong type of gas.	Ensure that the type of cooktop matches the natural gas supply.
	Regulator is not installed, is faulty, or is set for the wrong type of gas.	Check installation, replace regulator, or set regulator for proper gas.
Sparking but no flame ignition.	Gas shut-off valve is in the 'OFF' position.	Turn shut-off valve to the 'ON' position.
Igniters spark continuously after flame ignition.	Power supply polarity is reversed.	Have polarity corrected.
	Igniters are wet or dirty.	Dry or clean igniters.
Burner flame goes out at low setting.	Low gas supply pressure.	Contact gas company.
	Air intake holes around knobs are obstructed.	Remove obstruction.
Oven will not heat	Oven settings are not corrected	Follow mode selection and clock settings as specified in Oven Operation section of the manual.
Foods over-cooked or under-cooked	Incorrect cooking time or temperature.	Adjust time, temperature, or rack position.
'Cracking' or 'Popping' sound.	This is the sound of metal heating and cooling.	This is normal.

Instructions for Converting Range to Operate on Liquefied Petroleum Gas

INSTALLATION AND SERVICES MUST BE PERFORMED BY A QUALIFIED INSTALLER

IMPORTANT: SAVE INSTRUCTION MANUAL FOR THE LOCAL INSPECTOR' S USE.
READ AND SAVE THESE INSTRUCTIONS FOR FUTURE REFERENCE

⚠ WARNING This conversion kit must be installed by a qualified service technician in accordance with the manufacturer's instructions and all applicable codes and requirements of the authority having jurisdiction. Failure to follow instructions may result in fire, explosion or production of carbon monoxide causing property damage, personal injury or loss of life. The qualified service agency is responsible for the proper installation of this kit. The installation is not proper and complete until the operation of the converted appliance is checked as specified in the manufacturer's instructions supplied with this kit.

⚠ WARNING Before proceeding with the conversion, shut off the gas supply before disconnecting electrical power to the range. Be sure power supplies are off before installing the conversion kit. Failure to do so could cause serious bodily injury.

Determine the combination of top burners that are featured on your range. Identify the parts you need from this kit to complete the L.P. conversion. When burners are converted from natural to L.P. the BTU ratings are as follows:

Top Burner	6,000 BTU L.P Gas	[0.74mm]
Top Burner	9,000 BTU L.P Gas	[0.90mm]
Top Burner	12,000 BTU L.P Gas	[1.0mm]
Top Burner	15,000 BTU L.P Gas	[1.16mm]
Top Burner	20,000 BTU L.P Gas	[0.89*2+0.53mm]
18Broil	240v,60hz,2000w	
18Oven	240v,60hz,1600w	
30Broil	240v,60hz,3200w	
30Oven	240v,60hz,2800w	
36Broil	240v,60hz,3400w	
36Oven	240v,60hz,2800w	

*Note: For operation at elevations above 2000ft., appliance rating shall be reduced at the rate of 4% for each 1000 ft. above sea level

IMPORTANT: After replacing the natural gas to LP orifices, be sure to keep the original factory installed natural gas orifices for future range conversion back to natural gas.

The original orifices are Nature Gas:

Top Burner	6,000 BTU L.P Gas	[1.07mm]
Top Burner	9,000 BTU L.P Gas	[1.36mm]
Top Burner	12,000 BTU L.P Gas	[1.57mm]
Top Burner	15,000 BTU L.P Gas	[1.79mm]
Top Burner	20,000 BTU L.P Gas	[1.36*2+0.73mm]
18Broil	240v,60hz,2000w	
18Oven	240v,60hz,1600w	
30Broil	240v,60hz,3200w	
30Oven	240v,60hz,2800w	
36Broil	240v,60hz,3400w	
36Oven	240v,60hz,2800w	

Tools Required for L.P. Conversion:

2mm Allen Wrench
3/8 & 1/2 & 5/8" [19mm] Open End Wrench
1/8" Wide Flat Blade Screwdriver
Philips Screwdriver
7mm Nut Driver
1/4 Nut Driver
Adjustable wrench.

Instructions for Converting Range to Operate on Liquefied Petroleum Gas

1. Convert the Pressure Regulator

To access the gas regulator, pull the range away from the cabinet wall. The gas regulator is located at the bottom right corner of the range.

a. Electrical shock hazard can occur and result in injury or death. Disconnect electrical power to the range before servicing. Do not remove regulator or allow it to turn during servicing.

b. Unscrew the cap from the regulator. Do not remove the spring from the regulator.

c. Unscrew the insert from the cap and turn it over so the longer stem is facing the cap. Replace insert on the cap. Replace the cap on the regulator.

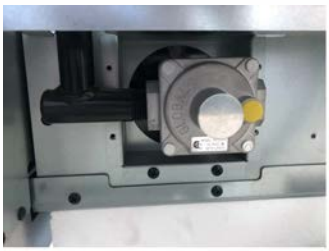





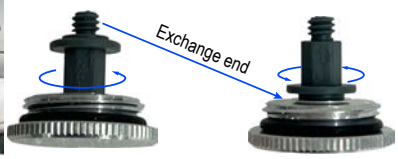

Position for NG

Position for LP

2. Convert Top Burner for LP/ Propane Gas

CAUTION Save the natural gas orifices removed from the appliance for possible future conversions to natural gas. You should use the following process to convert to Natural gas. Take extra care when handling steel parts.

a. Remove cooking grates, burner caps and inner burner rings.

b. Lift off outer burner heads and burner bases.

c. Remove the factory installed natural gas orifices from the center of the orifice holders using a 7mm nut driver. Remember to keep the original natural gas orifices for future conversions back to natural gas. Replace the LP orifice in each orifice holder. Tighten each orifice until snug. Use caution not to over tighten.







CAUTION

Care should be taken when removing and replacing gas components. Use proper support to prevent damage to components.

Instructions for Converting Range to Operate on Liquefied Petroleum Gas

5. Convert Gas Valves for LP/Propane Gas

a. Remove control knobs.

b. Using a flat screwdriver, adjust main burner bypass jets toward to ¼ circle for LP until the flame is normal.





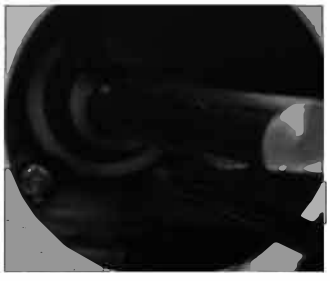

⚠ CAUTION

Care should be taken when removing and replacing gas components. Use proper support to prevent damage to components.

This cooking rang can be used with LPG(Liquid Propane Gas) and NG (Natural Gas). It is shipped from the factory adjusted for use with NG. Conversion nozzles are included in this plastic bag. Follow the instructions in the manual (page 28 to 32) for gasconversion. **Attention**: Affix this label as close as possible to the conversionplate on the gas range. ..... Gar range model: This range was converted on_____ (day/month/year)to LPG by _____ (name and address of company making this conversion). which accepts the liability that this conversion has been properly made. LPG Supply Pressure 10" w.c.	This cooking rang can be used with LPG(Liquid Propane Gas) (GPL) et du gaz naturel. L'appareil est réglé pour une utilisation avec du gaz naturel lorsqu'il quitte l'usine. Les buses de conversion se trouvent dans ce sac en plastique. Veuillez suivre les instructions fournies dans le guide (pnges 28 à 32) pour la conversion au gaz. **Attention** : Posez cette étiquette le plus près possible delaplaque de conversion située sur la cuisinière. ..... Modèle de cuisinière_____ Cette cuisiniére a été convertie le_____ (jour/mois/année) pour une utilisation avec du GPL par:_____ _____ (nom et adresse del' entreprise responsable de la conversion). qui assume laresponsabilité que la conversion a été effectuéecorrectement. Pression de l'alimentation enGPL: 10 po (25 cm)

6. Reconnect Gas and Electrical Supply to Range

Leak testing of the appliance shall be conducted according to the installation instructions provided with the range.

Checking for Manifold Gas Pressure

If it is necessary to check the manifold gas pressure, remove the burner cap, inner ring, outer burner head and burner base of the right front top burner and connect a manometer (water gauge) or other pressure test device to the burner orifice. Use a rubber hose with inside diameter of approximately ¼ " and hold the end of the tube tight over the orifice. Turn the gas valve on. For a more accurate pressure check, have at least two (2) other top burners burning. Be sure that the gas supply (inlet) pressure is at least one inch above the specified manifold pressure. The gas supply pressure should never be over 14" water column. When properly adjusted the manifold water column pressure is 10" for LP/Propane gas or 5" for Natural Gas

CAUTION

Do not use a flame to check for gas leaks

a. Disconnect the range and its individual shut -off valve from the gas supply piping system during any pressure of that system at test pressures greater than 14" of water column pressure (approximately ½ " psig)

b. The appliance must be isolated from the gas supply piping system by closing its individual manual shut -off valve during any pressure testing of the supply system at test pressure equal to or less than 14" water column pressure (approximately ½ " psig)

7. Air Shutter Oven Burner

The air shutter for the oven burner may need adjustment, especially if the unit has been converted for use with LP/Propane gas. The approximate flame length of the oven burner is one inch (distinct inner blue flame).

To determine if the oven burner flame is proper:

a. With the toe tick removed, set the oven to bake at 350 °F and observe the flame. If the flame is yellow in color, increase the air shutter opening size. If the flame is blue lifting away from the burner, reduce the air shutter opening size.

b. Turn off oven and allow it to cool before adjusting the air shutter. To adjust, loosen the lock screw, reposition the air shutter and tighten the lock screw. Retest the burner by repeating the steps above. When the burner flame is a distinct blue color burning steadily, the air shutter is adjusted correctly.

8. Installation of New LP / Propane Rating / Serial Plate

Record the model and serial number on the LP / Propane Rating serial plate provided in this kit. The information can be obtained from the existing Rating / Serial plate. Place the new plate as close as possible to the existing Rating / Serial plate on the range.

FORNO®

Alta Qualita

FOR

FAST SUPPORT

EMAIL AT ***INFO@FORNO.CA***



Customer Support: Call 1-866-231-8893 or email: info@forno.ca