HOROW®

Installation & User Manual

HOROW T0338 Series

One-Piece Toilet

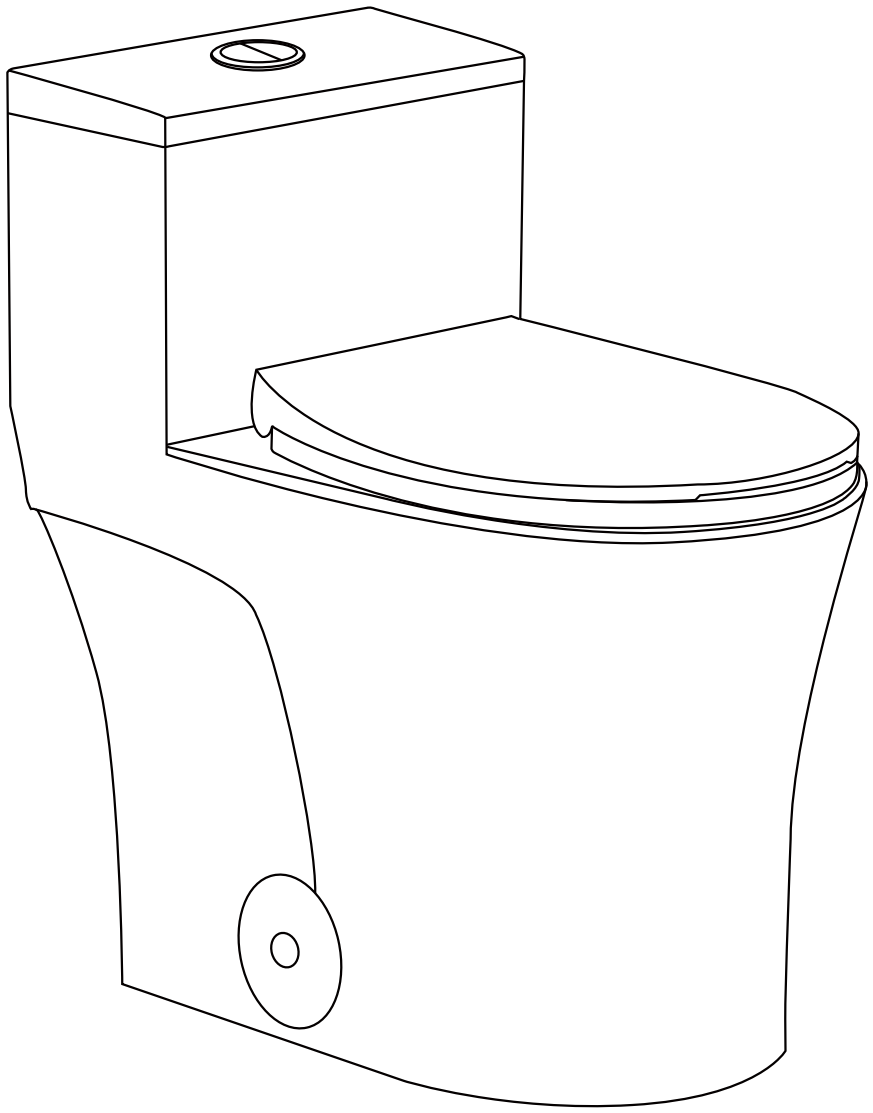

The appearance is for reference only.
Please refer to the actual product received.

www.horow.com | (+1)209-200-8033 | support@horow.com

Contents

Important Information 1

Overall Sketch 2

Product Installation 4

Tools Needed for Installation 4

Parts Included 4

Prior to Installation 4

Installation Procedure 5

Product Test Run 8

Care and Cleaning 9

Toilet Seat Installation 9

Installation Instructions for Tank Fittings 15

Precautions 15

Fill Valve Installation Instructions 16

Flush Valve Installation Instructions 21

Troubleshooting 25

Warranty 26

- Thank You for Choosing HOROW. Please read the instructions carefully before installation and keep it available for future maintenance or reference.
- We are not responsible for the accidents resulting from the user's negligence.
- HOROW reserves the right to make revisions to this manual without notice.

Need help? Contact HOROW Customer Service Team.

Phone: (+1)209-200-8033 **Monday to Friday**

Email: support@horow.com

Important Information

1. This product must be installed by a fully insured and licensed plumber only. Anyone other than a fully insured and licensed plumber who installs any of our products shall void the limited warranty. We recommend that such licensed plumbers have experience in the installation of products.
2. Two people are required to handle and install this product as it is fragile.
3. Please read this Manual carefully before installation. Always use the appropriate tools and always wear appropriate personal safety accessories to protect your safety.
4. The limited warranty is void for any commercial installation.
5. We are not responsible for local code compliance for this product. Building and plumbing codes may vary from state to state by location. We are not responsible for providing any compliance certifications.
6. We are not responsible for providing any type of certification for this product.
7. Under no circumstances shall we be liable for any incidental damages sustained in connection with this product.

Overall Sketch

12" Rough-in

HOROW T0338 series has both 12" and 10" rough-ins. Please refer to the specific dimensions based on the model you purchased.

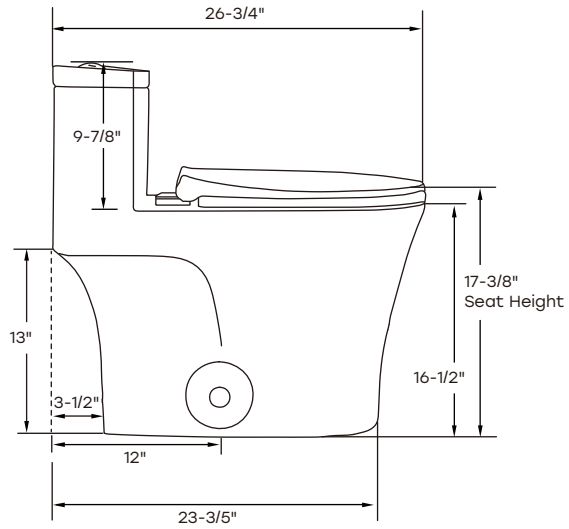

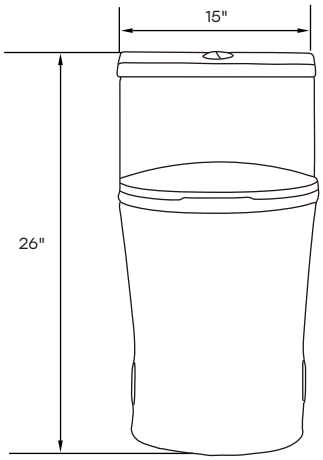

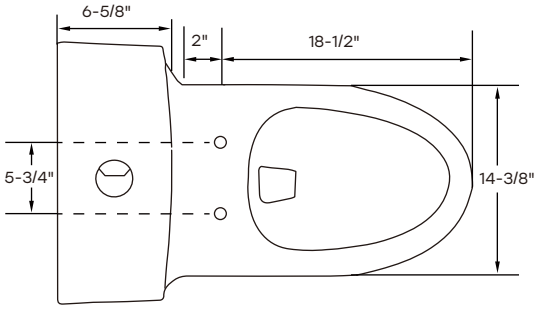

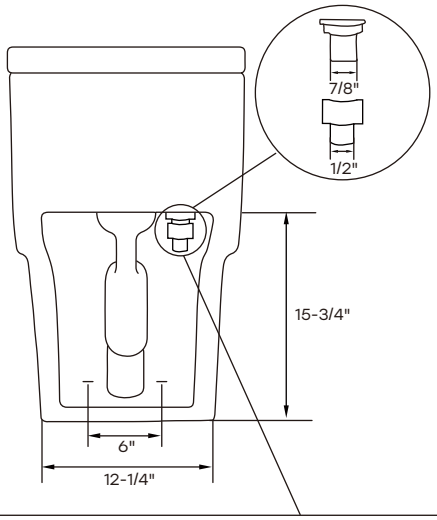

Note: Our toilet fits both 7/8" and 1/2" water hoses. If your water hose is 1/2", you can directly connect it to the toilet. If your water hose is 7/8", please screw off the adapter first, then connect the hose.

The dimensions are standard and may vary.
Please refer to the actual product received.

10" Rough-in

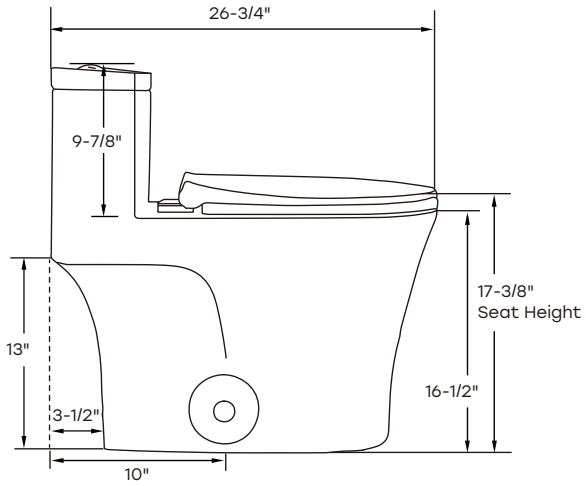
26-3/4"
9-7/8"
17-3/8"
Seat Height
13"
16-1/2"
3-1/2"
10"

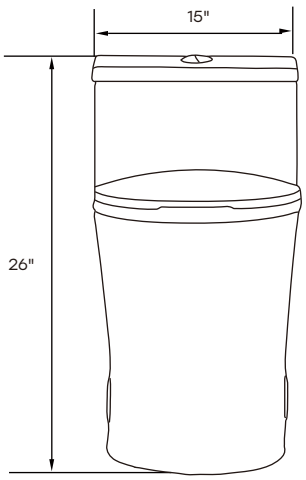
15"
26"

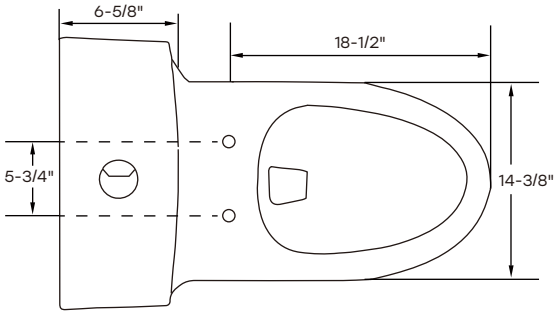
6-5/8"
18-1/2"
5-3/4"
14-3/8"

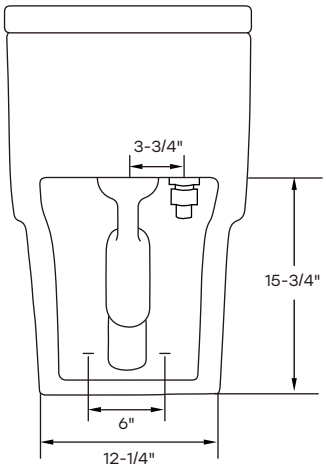
3-3/4"
15-3/4"
6"
12-1/4"

Product Installation

Tools Needed for Installation

Please have these tools prepared prior to installation.


Safety Glasses


Putty Knife


Spanner

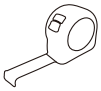
Measuring Tape

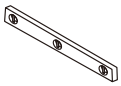
Level


Flexible Supply Hose

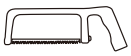
Hacksaw


Screwdriver


Floor Flange

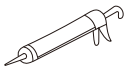
Caulk Gun & Sealant

Parts Included

Please confirm that all items below are inside the box.

Toilet with Seat

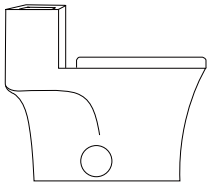

Tank Lid with Flush Button

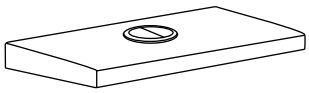

Decorative Caps

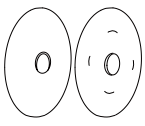
Side Covers


Hooks


Caps

Plastic Screws

Bolts Pack and Wax Ring

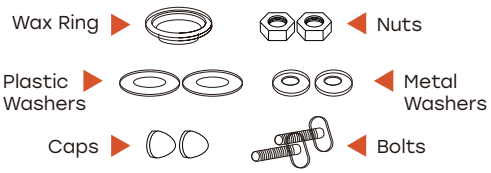

Prior to Installation

Follow all plumbing and building codes according to state and local requirements.

Please confirm that all the aforementioned items in the package are present. In case of any missing or damaged parts, please feel free to contact our Customer Service Team. Illustrations above are for references only. The ceramic product may have slight deformation during the firing process. Please consult the actual product for accurate details.

Verify the product dimensions and secure enough installation space. The rough-in size refers to the distance between the center of the toilet flange to the finished back wall.

To ensure proper installation, the distance between the water supply valve and the centerline of the toilet should be greater than half the width of the toilet bottom. The water supply valve should be about 7.5 inches away from the toilet centerline. For larger valves, a greater distance may be necessary to ensure proper clearance. For easy installation and maintenance, a range of 9 to 11 inches is recommended.

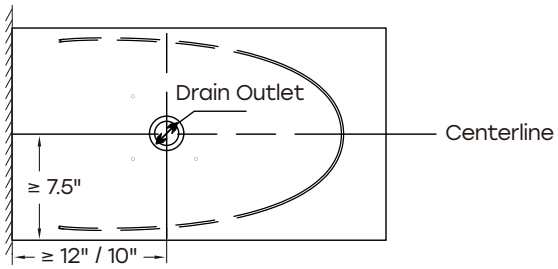

The minimum water pressure required is 3 psi, and the maximum water pressure is 80 psi. If the minimum water pressure is not met, the toilet may not achieve the optimal cleaning performance.

Installation Procedure

Install your toilet using the following steps:

Please remove the old toilet first if any and ensure the mounting surface is clean and level before the new toilet is installed.

1

Remove Old Toilet

1. Shut off the water supply. If there is no shut-off valve near the toilet, turn off the main water supply.
2. Flush the old toilet completely to empty the tank. Remove the remaining water in the tank or bowl with a sponge.
3. Disconnect and remove the water hose from the toilet's tank.
4. Unscrew and remove the nuts that attach the toilet to the floor, then detach the toilet and remove the bolts from the flange.
5. Use a putty knife to remove any old wax ring or putty sealant from the flange area.
6. Remove any remaining debris and wipe up any water in the installation area.
7. Temporarily seal the flange with a flange plug or a towel to prevent any gases from escaping.

2

Prepare Floor Flange

Measure the distance from the wall to the center of the flange to confirm the rough-in size. Ensure the flange (not included) is properly prepared and installed beforehand.

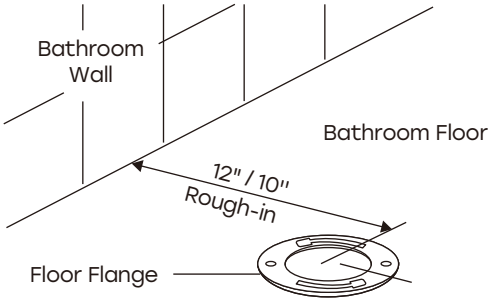

3 Connect Water Hose to Toilet Tank

Connect the flexible water hose (not included) to the toilet tank. Select the adapter based on actual requirement. Tighten the coupling nuts by 1/4 turn beyond hand tight.

Note:

1. Please connect the hose to the toilet tank inlet beforehand, as it will be difficult to do so after the toilet is installed.
2. Do not overtighten the nut on the tank connection. It may cause water leakage.

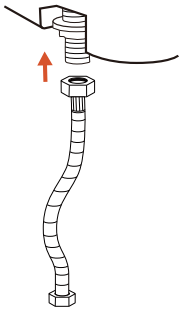

4 Install Floor Bolts

Install the floor bolts into the flange channels and turn 90°.
Position them 6" (152 mm) apart and parallel to the wall.



5 Install Wax Ring

Carefully turn the toilet on its side or upside down onto a soft blanket to avoid scratches on the toilet surface. Install the wax ring onto the drain hole at the bottom of the ceramic toilet and press it firmly into place.

Note:

1. Both the installer and all bystanders must wear safety glasses.
2. Store the wax ring at room temperature (70 to 75 °F) before use.

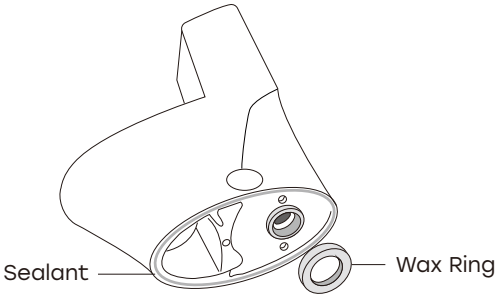

6

Position Toilet on Flange

Lift the ceramic toilet with two people and gently lower it onto the flange, aligning the bolts with the mounting holes.

Press down firmly on the ceramic toilet to ensure the wax ring forms a complete seal.

Avoid rocking the toilet, as this can break the seal and require replacing the wax ring.

Note: Shims may be needed under the bowl edge to accommodate slight manufacturing variations or an uneven floor, which does not indicate a defect in the toilet.

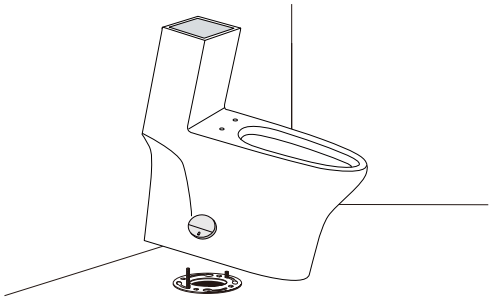

7

Install Ceramic Toilet

Place the plastic washers onto the bolts, followed by the metal washers, and then the nuts. Tighten the nuts securely to ensure the toilet is firmly seated on the floor. Put the caps on the nuts.

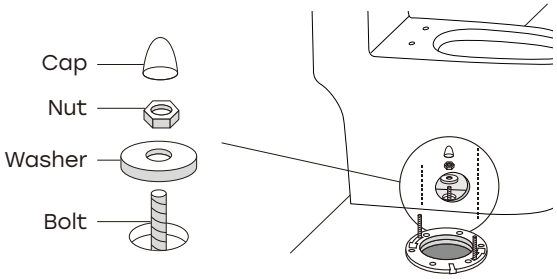

8

Install Decorative Caps

Pre-install the side covers and the hooks with the plastic screws. Insert the hooks into the holes on both sides of the ceramic toilet. Use a flathead screwdriver to tighten the side covers and finally put the decorative caps onto the screw heads.

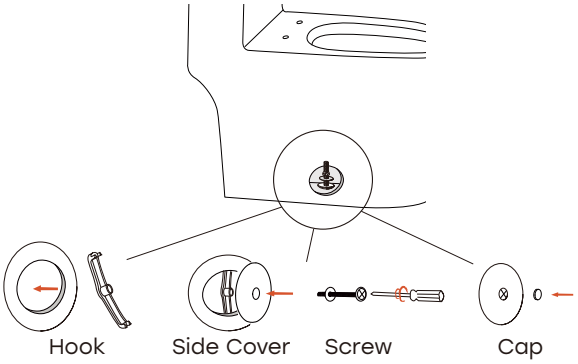

9

Connect Water Hose to Angle Valve

Connect the water hose to the angle valve. Tighten the coupling nuts by 1/4 turn beyond hand tight.

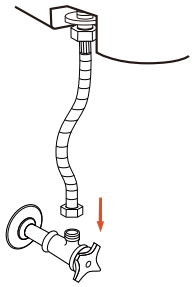

Product Test Run

1. Turn on the angle valve on the water supply pipe and allow the tank to fill.
2. Check all connections for leakage and tighten them as needed.
3. Once the tank is filled with water, flush it 4 to 5 times to test the flushing system. At the same time, check the bottom of the toilet for leakage to ensure that the wax ring is properly installed and sealed.
4. If there is no leakage, you are ready to finalize the installation. If any shims are installed at the bottom of the toilet bowl, trim them as needed.
5. Apply the silicone sealant around the base of the toilet. Allow 24 hours for the silicone to dry before using the toilet.

Note:

Leakage may not occur during or immediately after installation. Make sure to check for leakage every couple of hours on the first day after installation and then occasionally each day for the next week to ensure that the toilet is properly installed and no leakage occur. If any leakage is detected, immediately shut off the water supply valve and contact your local plumber to fix it.

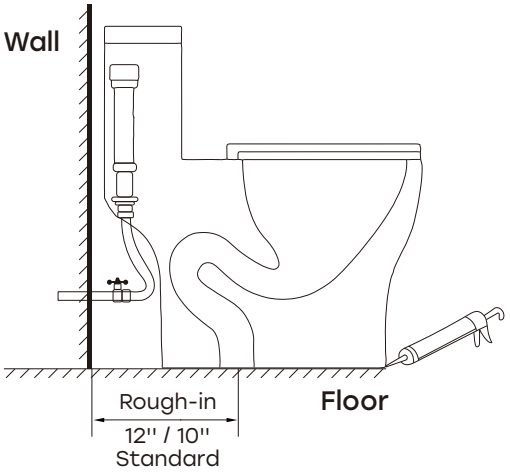

Care and Cleaning

The new toilet is made of vitreous china, which is resistant to stains, acids and abrasion. Clean the outside surface with mild soap, warm water and a soft cloth. For stubborn stains, use a powdered detergent with a damp sponge or nylon scouring pad. Avoid abrasive scouring powders, cleansers or pads, as they can scratch, damage and dull the surface. HOROW are not responsible for any tank fitting damage caused by the use of cleaners containing chlorine (calcium hypochlorite).

To clean the toilet seat, wash it with mild soapy water, rinse thoroughly with clean water and dry with a soft cloth. Avoid using detergents, disinfectants or aerosol cleaning products. Never use abrasive scouring powders on the seat. Some bathroom chemicals and cosmetics may damage the seat's finish, so always test your cleaning solution on a small and inconspicuous area before applying it to the entire surface.

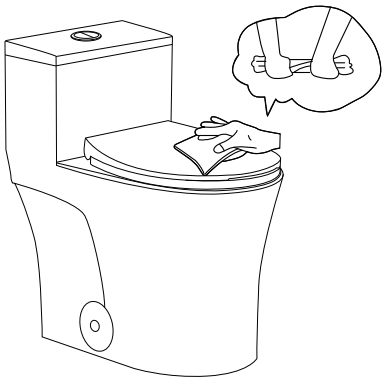

Toilet Seat Installation

The toilet seat and lid are preinstalled on the toilet bowl at the factory. If you need to replace the toilet seat, remove the existing seat and follow the installation instructions below.

There are two ways to install the toilet seat. Please select the one based on the seat and parts you actually received.

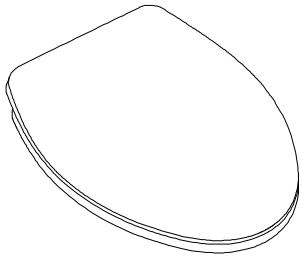



Plastic Washers



Metal Washers

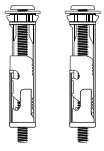

Anchors and Lock Screws

1 Insert the two anchors into the two holes on the toilet bowl and push them in until fully seated.

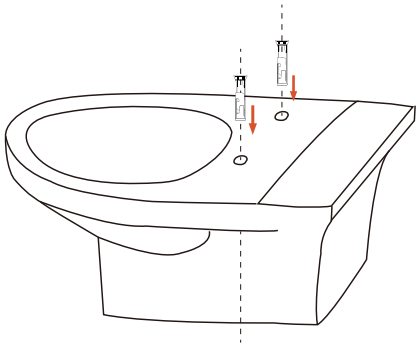

2 Open the hinge cover on the seat and place the toilet seat and lid on the bowl.

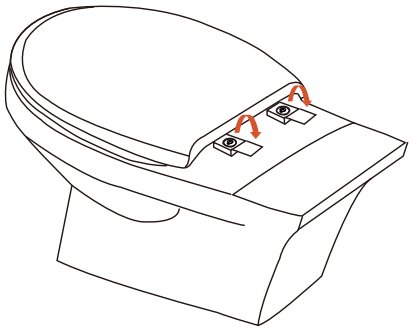

3 Put the provided plastic and metal washers successively onto the seat hinge holes, and then insert the lock screws. Lightly tighten the hinges with a screwdriver to allow for later adjustment.

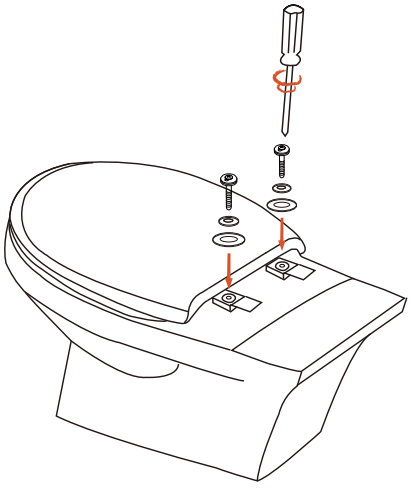

4 Adjust the seat position and align the toilet seat to the top rim of the toilet bowl.

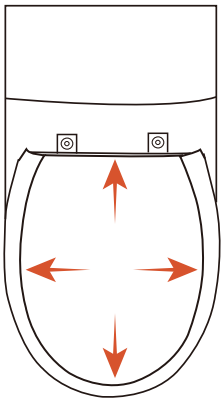

5 Use a screwdriver to firmly tighten the lock screws to the bowl.

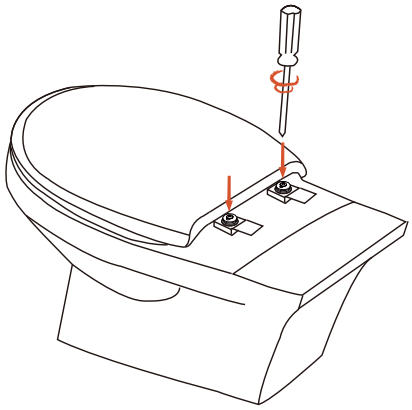

6 Close the decorative hinge cover.

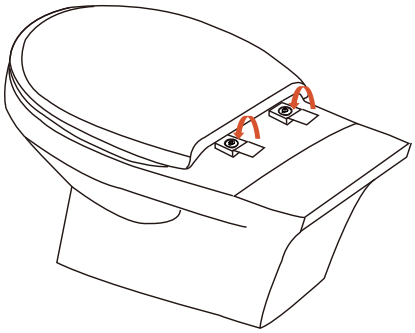

+

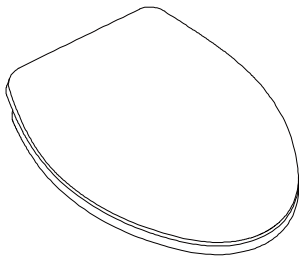



Metal Washers



Hinge Covers

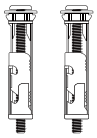

Anchors and Lock Screws

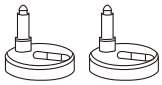

Hinges

1

Insert the two anchors into the two holes on the toilet bowl and push them in until fully seated.

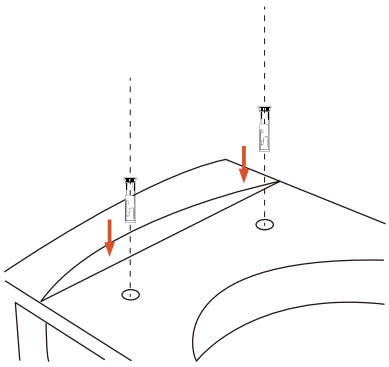

2

Put the hinges and metal washers successively onto the two holes, and then insert the lock screws. Lightly tighten the hinges with a screwdriver to allow for later adjustment.

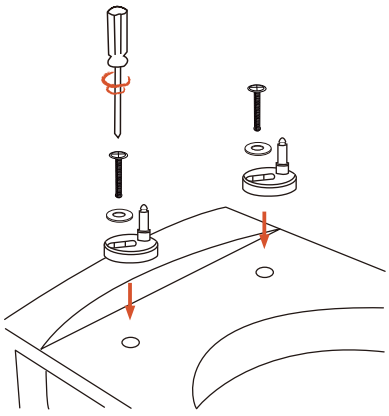

3 Attach the toilet seat to the hinges as shown below.

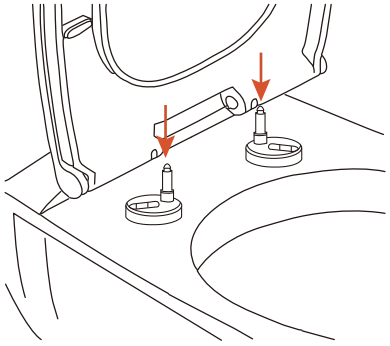

4 Adjust the seat position and align the toilet seat to the top rim of the toilet bowl.

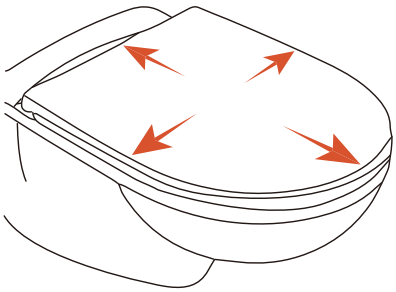

5 Remove the toilet seat by pressing the two push buttons.

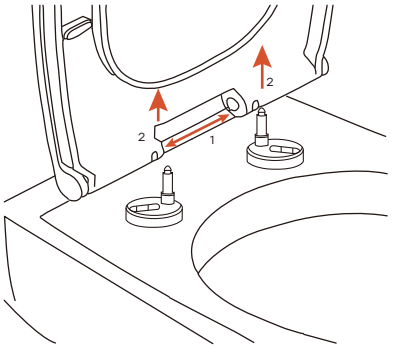

6 Use a screwdriver to firmly tighten the lock screws to the bowl.

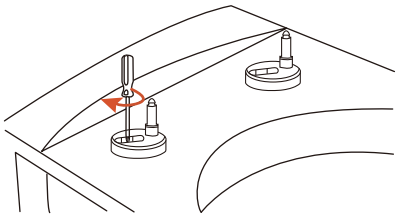

7 Put the decorative hinge covers on the hinges.

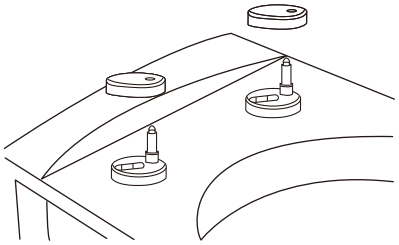

8 Install the toilet seat back onto the hinges.

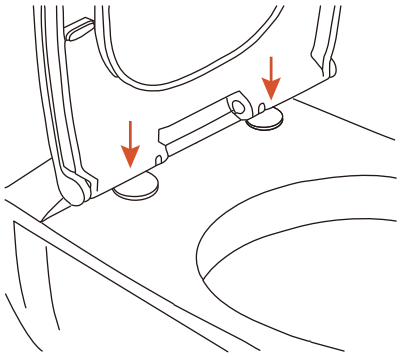

Installation Instructions for Tank Fittings

This page is for reference only, as all necessary tank fittings have already been properly installed, and all required settings have been completed by the manufacturer. If replacement or adjustment of the tank fittings is needed, please refer to the instructions below.

※ Remove the inoperative tank fittings and carefully clean the water tank.

※ Make sure all debris has been removed before installing the new tank fittings.

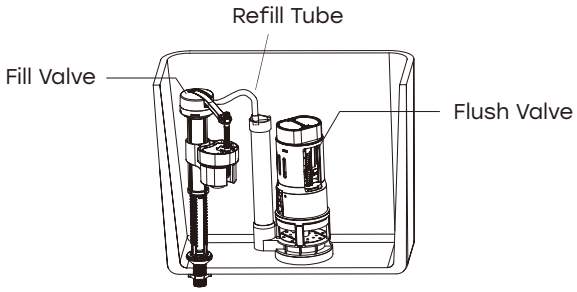

Precautions

1. Please read the following installation instructions carefully in order to avoid component damage or injury to the installer.
2. Do not use abrasive cleaners or solvents, or any related chemicals. Cleaners and solvents containing chlorine or calcium hypochlorite will cause serious damage to fittings to lead leakage. We shall not be responsible for any damage and failure of fittings caused by using such cleaners or solvents.
3. Do not use parts other than those specified to install our fittings, such as glass glue. We shall not be responsible for failures that are contributed to the use of parts other than those specified.
4. Water Temperature: 35.6 °F to 113 °F.

Warning:

Do not use or drop any chlorine or any chemical related components. Use of such products will: (1) result in damage to tank components and may cause flooding and property damage and (2) void warranty.

Do not overtighten nuts, or tank/bowl may crack.

Fill Valve Installation Instructions

Fill Valve Installation

Unscrew the nut and remove the plastic and rubber washers (optional).

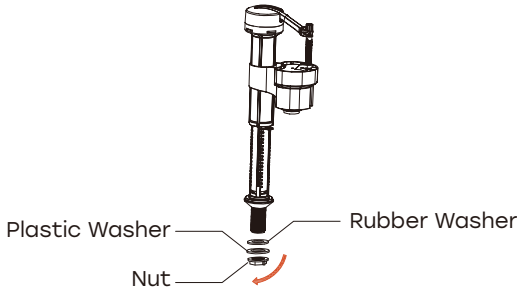

Insert the fill valve into the mounting hole at the bottom of the tank, install the rubber and plastic washers and tighten the hex nut.

Installation torque recommendation:

※ Recommended torque for locknut with rubber washer and plastic washer or with plastic washer only is 4 ~ 6 N.M. (Newton Meters)

※ Recommended torque for locknut without rubber washer and plastic washer is 7 ~ 10 N.M. (Newton Meters)

※ Note: Please check if there is any leakage after installation. After tightening the nut, the ceramic mounting hole may distort and can result in leaking.

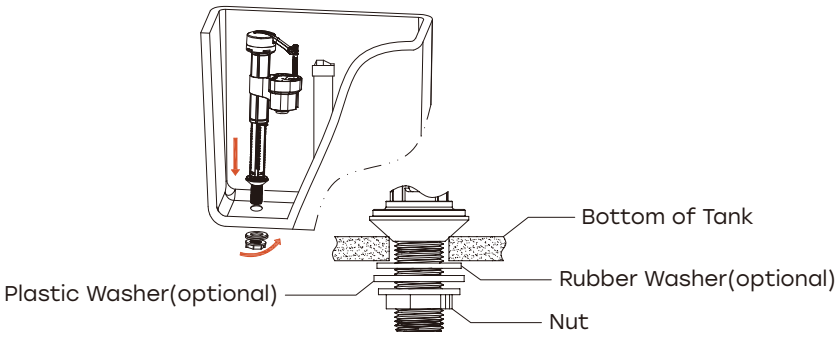

Connect the refill tube onto the overflow pipe of the flush valve.

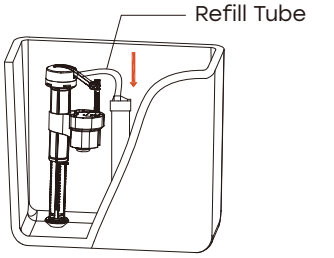

Install the water supply pipe (the flexible water hose) onto the shank of the fill valve and turn on the water supply. Select the adaptor or wing nut based on actual requirement.

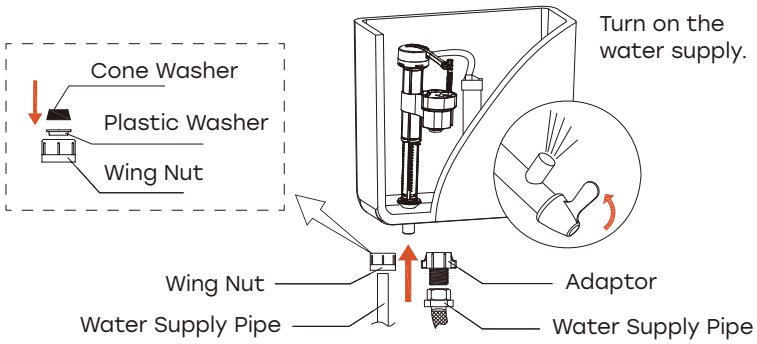

Water Level Adjustment

There are two ways to adjust the water level. Follow the instructions below to adjust the water level significantly or minorly based on actual requirement.

Major Water Level Adjustment

Remove the clip located between the fill valve body and the inlet pipe as shown below.

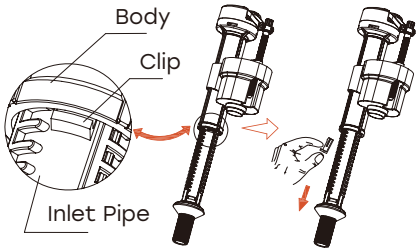

Grasp the inlet pipe and unscrew the fill valve body by rotating counterclockwise. Adjust the body to the desired height by pushing it up or down. Refasten the body by turning clockwise.

※ Push the valve body up to increase the water level, down to lower it.

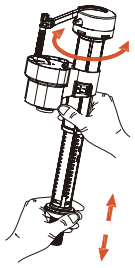

Re-install the clip as shown below.

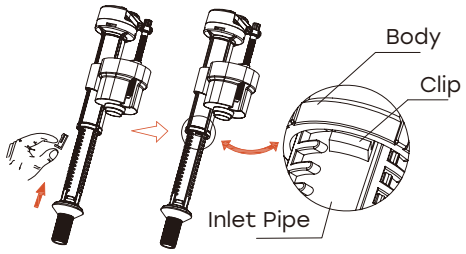

Minor Water Level Adjustment

Slide the clip to the right in the **Open** direction, as shown below.

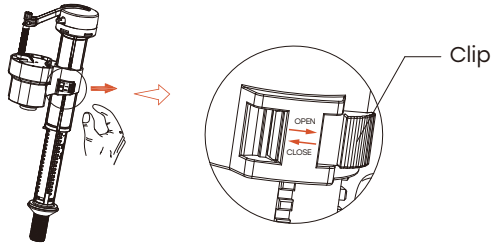

To reduce water level: Lower the shut-off cup to the desired height and rotate the thumbscrew (adjustment rod) counterclockwise to move the float down.

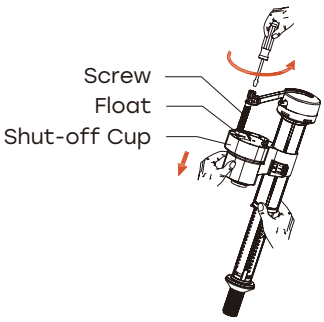

To increase water level: Rotate the thumbscrew clockwise to lift the float to the desired position and push the shut-off cup up.

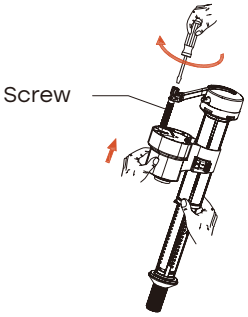

Note: Make sure that the distance between the float and the shut-off cup is 0.5 ~ 2 mm during adjustment.

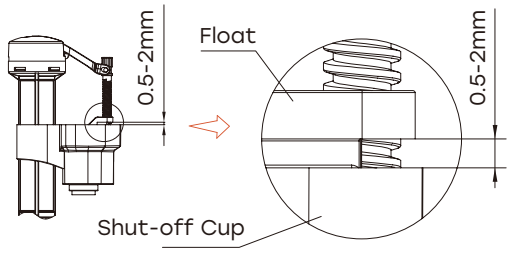

Slide the clip to the left in the **Close** direction, as shown below.

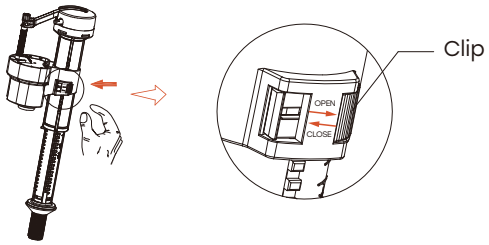

Filter Cleaning

The filter located inside the fill valve shank requires periodic cleaning.

Shut off the water supply, then remove the water hose from the inlet adaptor.

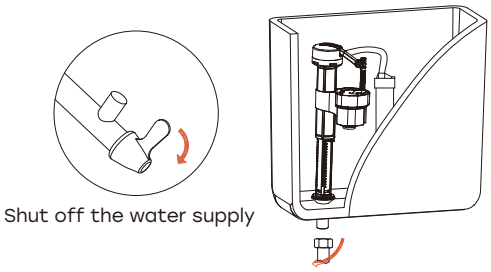

Remove the filter screen from the inner portion of the shank.

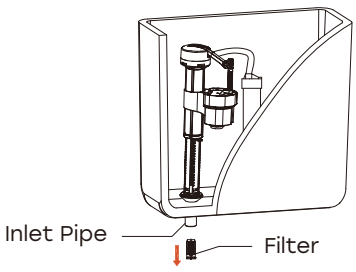

Clean the filter screen with water and brush.

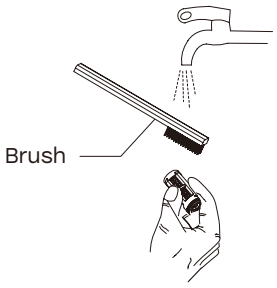

Re-install the clean filter back into the inner portion of the shank.

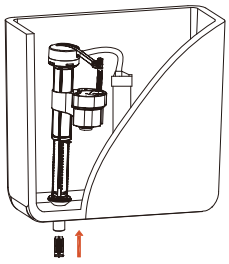

Connect the water hose back to the fill valve shank and turn on the water supply.

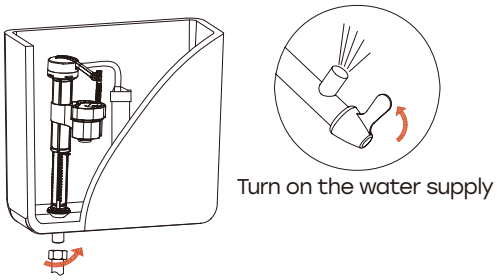

Flush Valve Installation Instructions

Flush Valve Installation

Rotate the valve body and lift it off the valve base to remove it.

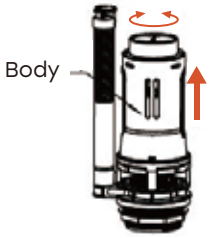

Loosen the S.S buckle to the end of the screw. Put the buckle side into the tank flush hole first, then the other side.

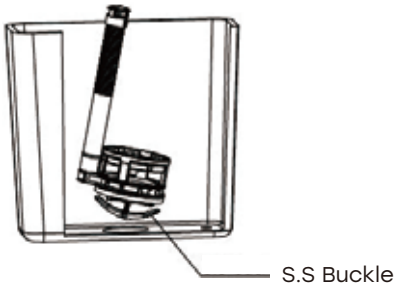

Fit the sealing gasket to the water tank and tighten the screw with a screwdriver to prevent any leakage.

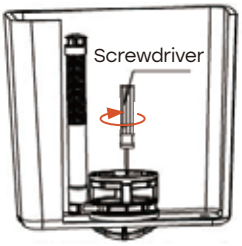

Re-install the valve body into the valve base.

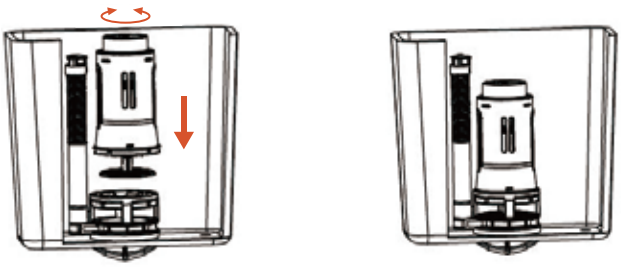

Push Button Installation

Unscrew the nut clockwise to remove the nut.

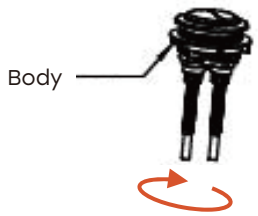

Insert the push button assembly into the mounting hole on the tank lid, and rotate the nut counterclockwise to tighten it, as shown below.

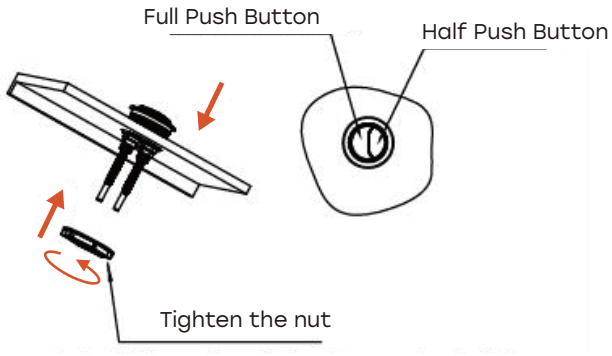

Push Button Installation with Flush Valve

Rotate the flush valve body clockwise or counterclockwise to align the half flush rod with the half push plate and the full flush rod with the full push plate.

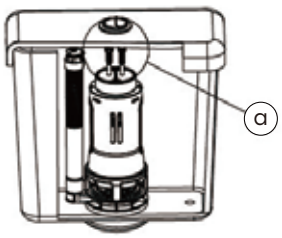

Unscrew the locknuts on the connecting rods. Rotate the connecting rods clockwise or counterclockwise to the right position, making the rods touch relevant buttons properly. Then, tighten the locknuts.

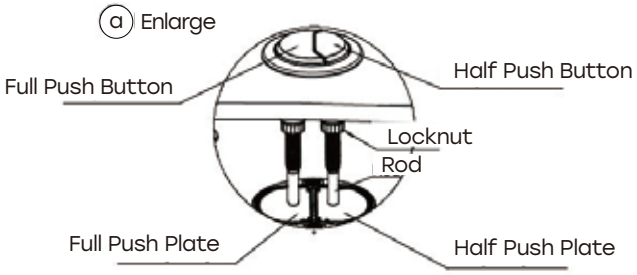

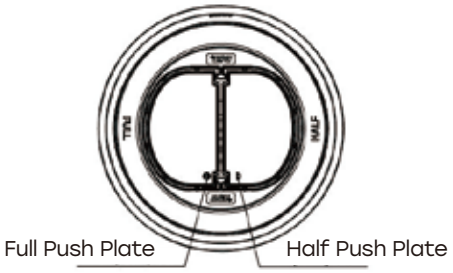

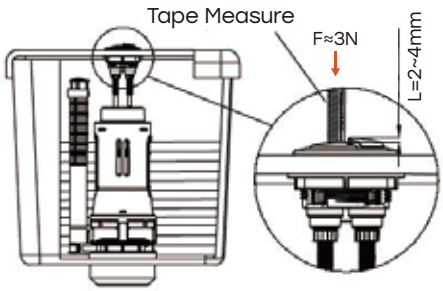

Fill the tank to water level, and lightly tap the full or half push button (F < 3 N, do not start flush) to ensure L is between 2 ~ 4 mm.

Refill Tube Installation

Connect the refill tube onto the overflow pipe of the flush valve.

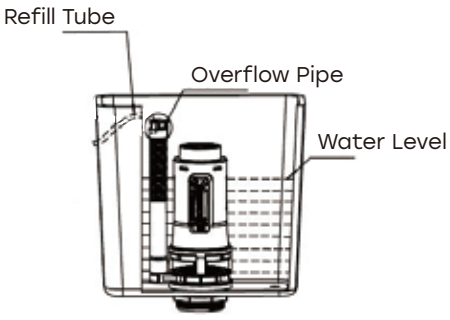

Note: Make sure the refill tube is above the water level.

Flush Volume Adjustment

The flush volume (GPF) is preset at the factory and requires no additional adjustments. Follow the instructions below to adjust the half or full flush volume based on actual requirement.

Adjustment of Half Flush Volume

Press and hold the clip on the half push button side, then slide the clip up to reduce the half flush volume or down to increase it.

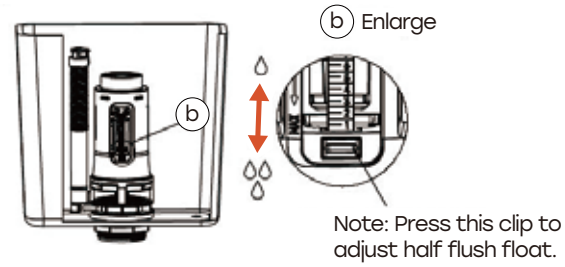

Adjustment of Full Flush Volume

There are two ways to adjust the full flush volume.

Press and hold the clip on the full push button side, then slide the clip up to reduce the full flush volume or down to increase it.

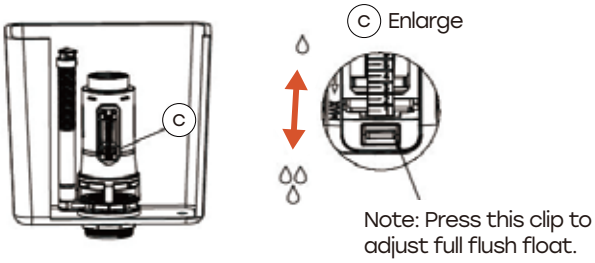

Rotate the clip under the valve body counterclockwise to reduce the full flush volume or clockwise to increase it.

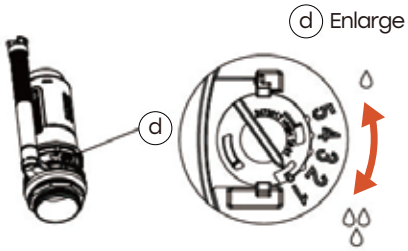

Troubleshooting

This Troubleshooting Guide is for general aid only. If the user encounters any problems, please first consult the troubleshooting guide below. If the problem persists, please contact our Customer Service Team.

Scan the QR code for video resources and find the troubleshooting videos you need.

Tank Fittings

Phenomenon	Fault Diagnoses	Solutions
Water level is too high or too low.	Fill valve is not adjusted to a suitable position.	Adjust the water level to the appropriate water level.
Fill valve does not shut off.	The tank wall has blocked the movement of the fill valve float.	Adjust the fill valve to the appropriate position and make sure the float can move freely.
	The refill tube wasn't installed properly.	Follow the instructions to re-install the refill tube correctly.
	Leakage of flush valve.	Make sure no leakage of flush valve.
	The water level is above overflow pipe of flush valve.	Re-adjust water level to appropriate position.
Fill valve does not turn on.	Water supply valve/angle valve is off.	Turn on the water supply valve/angle valve.
	The tank wall has blocked the movement of the fill valve float.	Adjust the fill valve to the appropriate position and make sure the float can move freely.
	Filter screen is dirty.	Clean filter screen.
Flush valve leaks.	The connecting rods are too long.	Cut off excess part and readjust. Note: cut the upper end of the rod.
	The valve body is dirty.	Remove the valve body for cleaning if affected by dirt in water.
	The valve body does not fit the base properly.	Re-install the valve body and the base to let them fit properly.
	The sealing gasket does not seal well.	Re-install the sealing gasket to form a complete seal.
Little or no flush volume when the push button is activated.	The connecting rods are too short.	Re-install the push button and adjust the rod length when connecting rods are too short.
Full flush or half flush water level is too high or too low.	Flush valve is not adjusted to a suitable position.	Readjust full flush adjustor, full flush float and half flush float.

Warranty

ONE YEAR LIMITED WARRANTY

HOROW® products are made with high-quality materials and workmanship to provide customers with products that are built to last. If any defects in material or workmanship are detected during normal use within the first year of purchase, such as the replacement of any product or product part that you consider to be defective, HOROW® will provide replacement parts free of charge. We are **not responsible** for all damages that result from **improper installation resulting in unavailability**, **repair and maintenance**. This warranty applies only to the original purchaser. Proof of purchase and **evidence of damage** will be required in the case of a **claim**.

HOROW® recommends the installations to be made by a licensed, professional plumber.

HOROW® will not be held responsible for any damage or product failure due to improper installation, misuse, or failure to use a licensed professional. HOROW® is not responsible for any removal or installation cost.

This One Year Limited Warranty will be voided if:

The installation recommendations were not followed.

The product has been moved from its initial place of installation.

The product has been modified.

The product has been subjected to improper maintenance, abuse, misuse, excessive use of chemicals, accident or other damages.

HOROW® makes no implication that products comply with any or all local building or plumbing codes. It is the consumer's responsibility to determine local code compliance. This warranty extends to the original purchaser and first consumer.

HOROW® is not liable for any incidental, consequential or special damages associated with the return, replacement, installation or use of your product. This includes freight costs, labor, travel time, lost profit, home damages and other contingent liabilities and costs (including, without limitation, costs associated with experts, investigations, analyses, attorneys and other professionals and services).

The HOROW® warranty is a comprehensive and explicit limit of liability, and all items outside of it are not addressable by or the responsibility of HOROW®. Certain states have variances regarding implied warranties and in those situations, we remain fully compliant.

For any questions or claims, please contact us by phone or email.

Phone: (+1)209-200-8033 **Monday to Friday**

Email: support@horow.com

When making a claim, please prepare a photo of the evidence of damage so that we can quickly resolve the claim for you.

Warning

Content may contain sharp and other possibly harmful pieces and may cause hazard to children and adults, HOROW® is not responsible in any way for personal damage.