GLACIER BAY®

Item # 1014 041 415
Model #BY575

USE AND CARE GUIDE

HIGH EFFICIENCY WATER DISPENSER

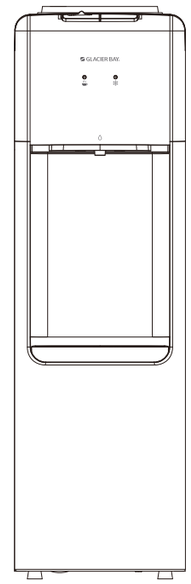

Questions, problems, missing parts?
Before returning to the store, call Glacier Bay Customer Service
8 a.m. - 7 p.m., EST, Monday - Friday, 9 a.m. - 6 p.m., EST, Saturday

1-855-HD-GLACIER (1-855-434-5224)

HOMEDEPOT.COM

THANK YOU

We appreciate the trust and confidence you have placed in water dispenser through the purchase of this high efficiency water dispenser. We strive to continually create quality products designed to enhance your home. Visit us online to see our full line of products available for your home improvement needs. Thank you for choosing Glacier Bay!

Table of Contents

Safety Information 2
Warranty 3
Pre-Installation 4
- Parts Drawing 4
- Read-to-dispense Indicator Lights 4
- Anti-Leak Bottle Support Collar 5
- Set Up 5
- Locate the Dispenser 5
- Install the Bracket 5
- Initial Product Cleaning Procedure 6
- Install a Water Bottle 6

Operation 7
- Dispense Cold Water 7
- Dispense Hot Water 7
- Replace a Water Bottle 7

Care and Cleaning 8
- Cleaning The Outside Of The Water Dispenser 8
- Cleaning The Drip tray 8
- Cleaning The Condenser 8
- Draining The Reservoirs 9
- Cleaning The Inside Of The Dispenser 10
- Going Away On Vacation 11
- Frequently Asked Questions 11

Troubleshooting 12

Safety Information

1. For use with 3 or 5 gallon (12 or 19 liter) water bottles.
2. Never use this dispenser with water that is unsafe to drink or is from an unknown source.
3. Never use any other liquid in the dispenser other than known and microbiologically safe bottled water.
4. This water dispenser is equipped with a grounded power cord plug for your safety.
5. Do not use an extension cord with your water dispenser.
6. Always grasp plug and pull straight out from outlet. Never unplug by pulling on power cord.
7. Do NOT use dispenser if cord becomes frayed or otherwise damaged.
8. To protect against electric shock, do NOT immerse cord, plug, or any other part of dispenser in water or other liquids.
9. Keep your water dispenser in a dry place away from direct sunlight.
10. Leave a minimum of 4 in. around the back and sides of the dispenser for proper ventilation.
11. Always install your water dispenser on a hard, flat, level floor. Wait 15 minutes before restarting machine after shutting it down.
12. Always unplug the water dispenser before maintenance.
13. Regular cleaning of your water dispenser is required for your warranty. Please follow the care and cleaning outlined in this manual and clean the dispenser every 4 months.
14. Do not dispense hot water if water bottle is empty.

WARNING: BEFORE CONNECTING THE APPLIANCE TO THE POWER SOURCE, let it stand upright for approximately 24 hours. This will reduce the possibility of a malfunction in the cooling system from mishandling during delivery.

WARNING: Never put anything flammable close to the dispenser.

WARNING: This water dispenser is designed for INDOOR applications only.

WARNING: Do not damage the refrigeration cooling system.

CAUTION: Never allow children to dispense hot water without proper and direct supervision.

IMPORTANT: Refrigerants must be handled and disposed of by qualified service personnel only.
Before discarding this water dispenser to landfill, contact local authorities for advice on proper disposal methods for refrigerants.

Warranty

Do not return this product to the store: Please contact Customer Service at 1-855-HD-GLACIER.

The supplier warrants your water dispenser to be free from manufacturing defects in workmanship or material under normal operating conditions for one (1) year from the original date of purchase. This warranty applies only in the country in which it is sold and is available to the original purchaser only. This warranty is non-transferable.

This warranty for this water dispenser is void if the water dispenser is altered, modified, or combined with any other machine or device. Alteration of this water dispenser may cause serious flooding and/or hazardous electrical shock or fire.

The provisions of this warranty shall not apply to:

- □ Water bottles
- □ Service trips to your home to teach you how to use the product
- □ Improper installation, delivery, or maintenance (Failure to maintain the product according to the instructions outlined in the product manual will automatically void the warranty.)
- □ Failure of the product due to abuse, misuse, alteration, commercial use, or any use for which the product was not intended
- □ Products that are used outside a residential or office environment
- □ Replacement of house fuses or resetting of circuit breakers
- □ Use of this product where water is microbiologically unsafe or of unknown quality
- □ Damage to the product if used to dispense anything other than water
- □ Damage to the product caused by accident, fire, floods, or acts of God
- □ Any service to the product by unauthorized personnel
- □ Incidental or consequential damage caused by possible defects with this appliance, its installation or repair

This warranty shall be fulfilled at an authorized repair facility. All warranty repairs must be pre-authorized by the supplier.

The supplier will, at its option, repair or replace free of charge any defective part, where the purchaser has notified their retailer within the warranty period. The obligation of the supplier under this warranty is expressly limited to such repairs or replacement. This warranty does not cover the freight costs to and from the authorized repair facility.

Except as set forth herein or required by law, the manufacturer makes no other warranty, guarantee, or agreement, express, implied, or statutory, including any implied warranty of merchantability or fitness for a particular purpose.

The manufacturer does not assume or authorize any person to assume any obligations of liability in connection with this water dispenser. In no event will the manufacturer be liable for indirect, special, or consequential damages (including, without limitation, economic loss or for any delay in the performance of this agreement due to causes beyond its control.

Some states or provinces do not allow limitations on how long an implied warranty lasts, so the above limitation may not apply to you. Some states or provinces do not allow the exclusion or limitation of incidental or consequential damages, so the above limitation or exclusion may not apply to you. This warranty gives you specific legal rights, and you may also have other rights which vary from state to state or from province to province.

If you require service, please first see the “Troubleshooting” section of this manual. Additional assistance can be found by calling our customer service line at 1-855-HD-GLACIER, 8 a.m.-7 p.m., EST, Monday-Friday, 9 a.m.-6 p.m., EST, Saturday.

Keep this manual and your sales slip together for future reference. You must provide proof of purchase for in-warranty service.

Write down the complete model number of your water dispenser to better help you obtain assistance or service if your ever need it.

Pre-Installation

PARTS DRAWINGS

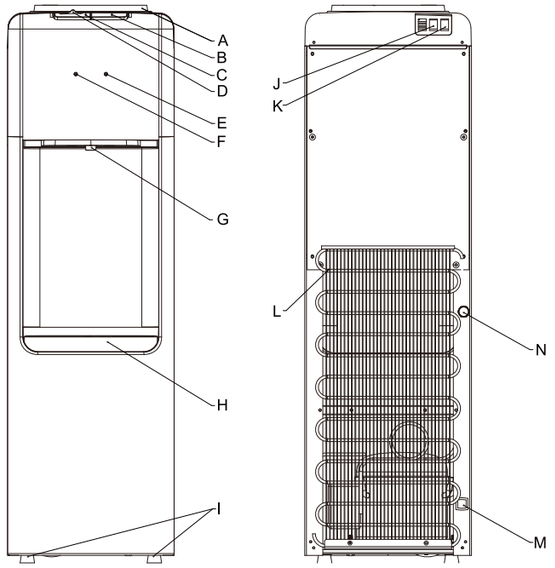

Part	Description	Quantity
A	Anti-leak bottle support collar	1
B	Cold water button	1
C	Hot water button	1
D	Safety lock	1
E	Cold water indicator light	1
F	Hot water indicator light	1
G	Spout	1

Part	Description	Quantity
H	Removable drip tray	1
I	Adjustable feet	2
J	Activation switch for cooling	1
K	Activation switch for heating	1
L	Condenser	1
M	Power cord	1
N	Drain cap	1

READ-TO-DISPENSE INDICATOR LIGHTS

	RED	STEADY ON	Heater (hot water tank) is operational.
		OFF	The hot water has reached optimum temperature and is ready for dispensing.
	Blue	STEADY ON	Cooler (cold water tank) is operational.
		OFF	The cold water has reached optimum temperature and is ready for dispensing.

Pre-Installation (continued)

ANTI-LEAK BOTTLE SUPPORT COLLAR

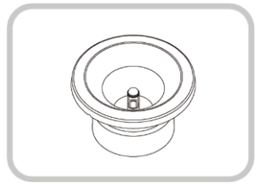

The bottle support collar on your water dispenser is engineered with a special anti- leak-proof system to prevent accidental loss of water, (flooding) as a result of inadvertently installing a defective water bottle. Unfortunately, not all water bottles are created equal. Almost all 3 and 5 gallon (12 & 19L) water bottles are recycled and handled extensively during cleaning, filling, and shipping. As a result, they are very prone to developing hairline fractures and pinhole leaks that are not always obvious to the end user until the time of installation.

CAUTION: Anti-leak bottle support collar will have no effect if the Bottle is without a spill-proof cap.

This water dispenser has been designed and manufactured to provide dependable and safe service if installed, set up, operated and maintained as directed. Follow all instructions in the order provided.

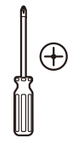

SET UP

All hardware is included. Set up requires a Phillips screwdriver (not included).

LOCATE THE DISPENSER

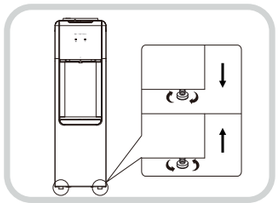

Do NOT plug the power cord into a wall outlet until the water bottle is installed.

1. Locate the dispenser on a hard and level surface in a cool shaded location near a ground fault interrupting receptacle.Leveling the dispenser by adjusting the adjustable feet if needed.
2. Position the dispenser so the back is at least 4 in. from the wall and there are at least 4 in. of clearance on both sides.

INSTALL THE BRACKET

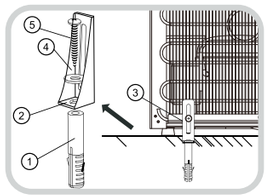

1. Using a Phillips screwdriver, remove screws (3) on the lower left side of the condenser, place the L-shaped bracket (2) in the same position and secure it using the same small screw.
2. Drill a hole in the floor 4 in. away from the wall. Choose the appropriate drill bit depending on your floor type (tile, concrete or wood). Use the size 0.47 in. diameter to drill a hole 2 in. deep.
3. Place the anchor (1) in the hole so that it is flush with the floor level.
4. Align the L-shaped bracket (2) to the anchor and use the washer (4) and the long screw (5) to secure the unit to the floor.

Please contact 1-855-HD-GLACIER (1-855-434-5224) for further assistance.

Pre-Installation (continued)

INITIAL PRODUCT CLEANING PROCEDURE

This water dispenser has been tested and cleaned prior to packing and shipping.

During transit dust and odors can accumulate in the tank and lines.

1. Ensure the unit is unplugged.
2. Remove the Funnel by turning it counterclockwise. (Fig. 1)
3. Fill the water reservoir with 12 cups (3 L) hot water, and then wait 30 minutes. (Fig. 2)
4. Slide the safety lock to the left side and simultaneously press the hot water button until no water comes out. (Fig. 3)
5. Press the cold water button on top to dispense water until no water coming out. (Fig. 4)
6. Turn counterclockwise to open the drain cap and drain the water from the tanks. Do not tilt the unit to drain the water. (Fig. 5)
7. Close the drain cap by turning it clockwise.
8. Place the funnel back in its original position.
9. Leave the water dispenser unplugged.

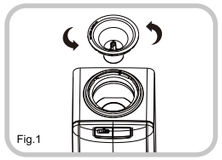
Fig.1

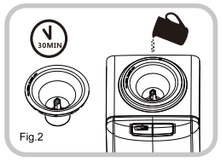

Fig.2

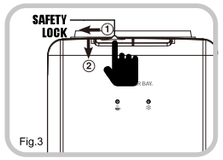

Fig.3

INSTALL A WATER BOTTLE

Bottle not included. Requires standard 3 or 5 gallon water dispenser bottles.

1. Ensure the unit is unplugged and drain out water from the drain cap.
2. Remove the tamper seal from the top of the bottle cap. Do NOT remove the plastic cap. (Fig. 6)
3. Lift bottle and insert onto the probe. Apply slight pressure until the plug inside the cap pushes in and the bottle is seated. (Fig. 7) Water will begin to flow into the reservoirs.
4. Press each water button to ensure water is running through the unit. (Fig. 3, Fig. 4)
5. Plug the dispenser unit into the electrical outlet.
6. Turn ON the hot water switch (Red) to activate the heating function. The Hot water indicator (Red) will illuminate. (Fig. 8)
7. Turn ON the cold water switch (Green) to activate the cooling function. The Cold water indicator (blue) will illuminate. (Fig. 9)
8. Dispense and dispose at least one quart of water from each button prior to drinking any water.


Fig.4

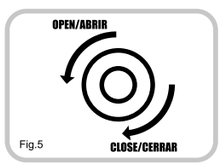

Fig.5

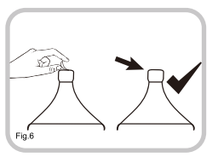
Fig.6

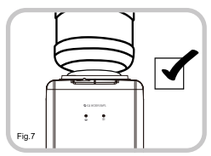
Fig.7

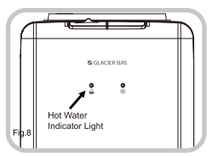

Fig.8

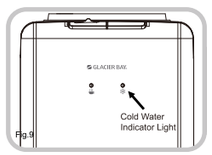

Fig.9

Operation

CAUTION: The following working time is based on standard room temperature (77°F) measurements and may vary due to room temperature changes.

DISPENSE COLD WATER

CAUTION: Each time you install a new water bottle, it will take 45 minutes to get water to desired cold temperature.

During this time the compressor will run continuously. This is Normal. While cold water indicator light is off, the unit is ready to dispense cold water.

1. Position bottle, glass, pitcher or suitable container below the spout.
2. Press down the cold water button. (Fig. 10)
3. Release control once desired fill level is achieved.

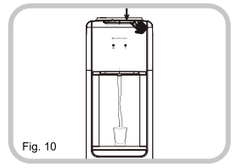
Fig. 10

DISPENSE HOT WATER

CAUTION: This unit dispenses water at temperatures that can cause severe burns. Avoid direct contact with hot water.

Keep children and pets away from unit while dispensing. Never allow children to dispense hot water without proper and direct supervision. Unplug unit to prevent unsupervised use by children.

CAUTION: Each time you install a new water bottle, it will take 10-15 minutes to get water to desired hot temperature. While hot water indicator light off, the unit is ready to dispense hot water.

1. Position bottle, glass, pitcher or suitable container below the spout.
2. Slide the safety lock to the left side and simultaneously press down the hot water button. (Fig. 11)
3. Release control once desired fill level is achieved.

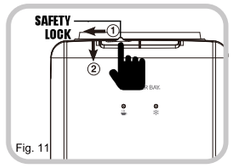

Fig. 11

REPLACE A WATER BOTTLE

1. Turn OFF the hot and cold water switches.
2. Unload the empty bottle from the water dispenser.
3. Proceed to load the new bottle as described in “Install a Water Bottle” (Page 6).

Please contact 1-855-HD-GLACIER (1-855-434-5224) for further assistance.

Care and Cleaning

CLEANING THE OUTSIDE OF THE WATER DISPENSER

Ensure the unit is unplugged. Wipe the outside of the dispenser with water. Never use harsh chemicals or abrasive cleaners. Rinse thoroughly with clean water and then dry surfaces.

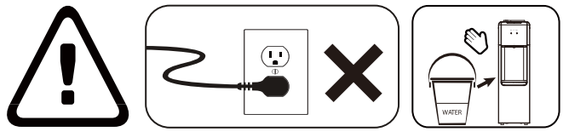

CLEANING THE DRIP TRAY

To remove, lift the drip tray up. Drain and clean. The drip tray should be emptied and cleaned regularly to avoid spotting and any mineral deposits. Clean with water or water dispenser cleaner. Then wash, rinse, and dry thoroughly. Never clean the drip tray in the dishwasher. The tray is not dishwasher safe.

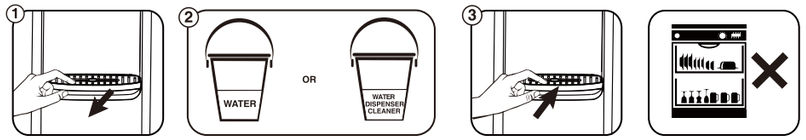

CLEANING THE CONDENSER

Vacuum or sweep away the dust from the condenser coils at the back of the dispenser. For best results, you can purchase a brush designed specifically for this purpose from your local appliance store. This will improve cooling and efficiency.



Care and Cleaning (continued)

DRAINING THE RESERVOIRS

CAUTION: Always exercise caution when draining the reservoirs. This unit dispenses water at temperatures that can cause severe burns.

Ensure the unit is unplugged. Drain the reservoirs before and after cleaning.

1. Remove the water bottle.
2. Place a cup below the spout.
3. Press each water button.
4. Dispense hot water from the spout until water no longer comes out.
5. Dispense cold water from the spout until water no longer comes out.
6. Release the water buttons.
7. Place a bucket beneath the drain cap on the back of the dispenser and open the drain cap, being cautious of the hot water.
8. Let the water flow into the bucket.
9. Close the drain cap.
10. Install a new water bottle.

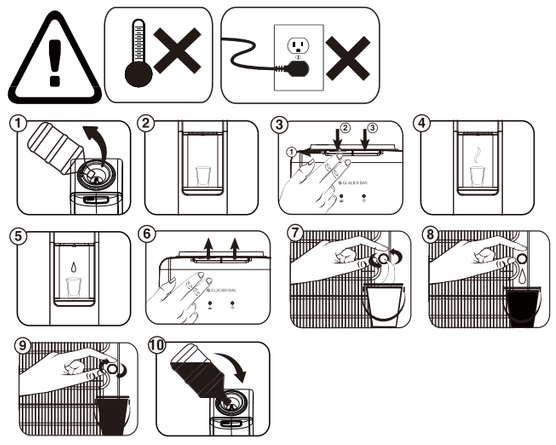

Please contact 1-855-HD-GLACIER (1-855-434-5224) for further assistance.

Care and Cleaning (continued)

CLEANING THE INSIDE OF THE DISPENSER

Ensure the unit is unplugged. In addition, clean every 4 months in order to maintain a hygienic environment and prevent the potential growth of bacteria.

1. Turn off the hot water switch.
2. Remove the water bottle.
3. Remove the anti leakage collar by turning it counterclockwise.

3a. Remove the hot water funnel from the cold reservoir.

4. Saturate a clean cloth with water, and clean the outside of the dispenser.
5. Pour 12 cups (3 L) hot water into the reservoir and allow it to sit for 30 minutes.
6. Place a cup below the spout.
7. Press each water button.
8. Dispense hot water from the spout until water no longer comes out.
9. Dispense cold water from the spout until water no longer comes out.
10. Release the water buttons.
11. Place a bucket beneath the drain cap on the back of the dispenser and open the drain cap, being cautious of the hot water.
12. Let the water flow into the bucket.
13. Close the drain cap.
14. Place the hot water funnel firmly in the cold reservoir.
15. Install the anti leakage collar by turning it clockwise.
16. Install a water bottle.
17. Press each water button to ensure water is running through the unit, then plug the dispenser unit into the electrical outlet and turn on the hot water switch.

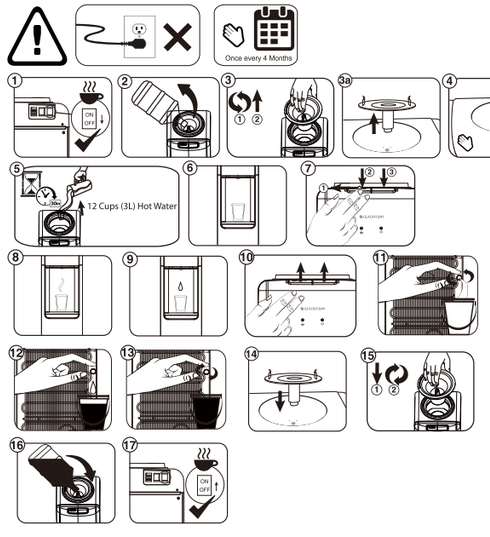

Care and Cleaning (continued)

GOING AWAY ON VACATION

When not using the dispenser for long periods of time or when going on vacation, unplug the dispenser and drain the reservoirs. Follow Initial Product Cleaning Procedures upon return and startup of the dispenser.

FREQUENTLY ASKED QUESTIONS

Q: Why do I get a plastic taste from my dispenser?

A: As with most new appliances such as coffee makers and kettles, there is often a plastic taste upon initial start-up of the unit.

To remove this taste, simply follow the cleaning instructions outlined in Cleaning the Inside of the Dispenser.

Q: What is the spike that goes into the bottle?

A: Glacier Bay® water dispensers feature a “piercing valve” as part of the bottle support collar, providing added convenience for water bottle installation. Depending on the water bottle supplier, some water bottles incorporate a self-piercing membrane in the bottle cap for this specific purpose (ask your water bottle supplier if your water bottle incorporates this feature). If your water bottle does not incorporate this feature, the entire bottle cap must then be removed to eliminate possible damage to the piercing valve.

Please contact 1-855-HD-GLACIER (1-855-434-5224) for further assistance.

Troubleshooting

Problem	Solution
No water is dispensing from the spout	□ Make sure that the bottle is not empty. If so, replace it. □ Ensure the bottle seal is removed completely. □ Allow 10 minutes for the water tanks to fill up after replacing the bottle water. □ Press and hold the water buttons for 30 seconds until water begins to flow. □ Make sure that you fully press the water controls.
Water dispensed is not cold	□ Make sure the dispenser stands upright for 24 hours before connecting to the a working outlet. □ Make sure the back of the dispenser is 4” away from the wall and there is free airflow on all 4 sides of the dispenser, do not expose to direct sunlight. □ Make sure the green switch on the back of the dispenser is ON. □ It takes up to one hour after setup to dispense cold water. □ Make sure blue indicator for Cold Water is OFF. □ Make sure the condenser on the back of the dispenser is clean. If covered with dust, please unplug the power supply, wipe the condenser with a dry towel and then plug it in again. □ Over consumption of cold water in short time, wait for cooling to complete.(Blue light change from steady-on to off)
Water dispensed is not hot	□ Make sure the power cord is properly connected to a working outlet. □ Make sure dispense out water from hot faucet before turn on heating switch. If so, turn off heating switch, press and hold hot faucet for 30 seconds until water out. and allow the dispenser to rest for 30 minutes and then turn on heat switch again. □ Make sure red switch on back of dispenser is ON. □ It takes 20 minutes after setup to dispense hot water. □ Heating not complete or over consumption of hot water in short time, wait for heating to complete. (Red light change from steady on to off)
Dispenser is noisy	□ Make sure the dispenser is placed on a level ground. Leveling the dispenser by adjusting the adjustable feet if needed. □ Make sure the dispenser stands upright for 24 hours before connecting to the power source. □ Make sure there is free airflow on all 4 sides of the dispenser. □ The heating element and the compressor may cause some noise in working condition.
Water is leaking in the unit	□ Replace with a new bottle of water. □ Ensure the bottle is installed correctly. □ Check to see if the bottle is cracked or broken. If so, replace the bottle. □ Check if the drip tray is full. If so, please empty the drip tray. □ Make sure the button is not stuck in the ON position and has moved back to the OFF position.
Water tastes bad	□ Drain the water from the reservoirs and replace the bottle with a fresh one. □ Clean the dispenser per the Proper Care & Cleaning instructions.

Please contact 1-855-HD-GLACIER (1-855-434-5224) for further assistance.

GLACIER BAY®

Questions, problems, missing parts? Before returning to the store,
call Glacier Bay Customer Service
8 a.m. - 7 p.m., EST, Monday-Friday, 9 a.m. - 6 p.m., EST, Saturday

1-855-HD-GLACIER (1-855-434-5224)

HOMEDEPOT.COM

Retain this manual for future use.