3

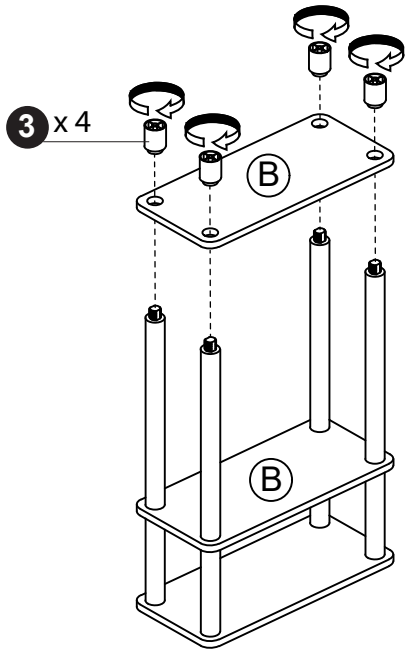

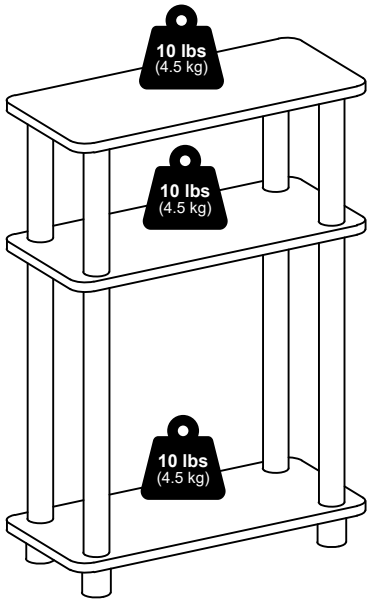





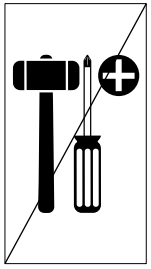

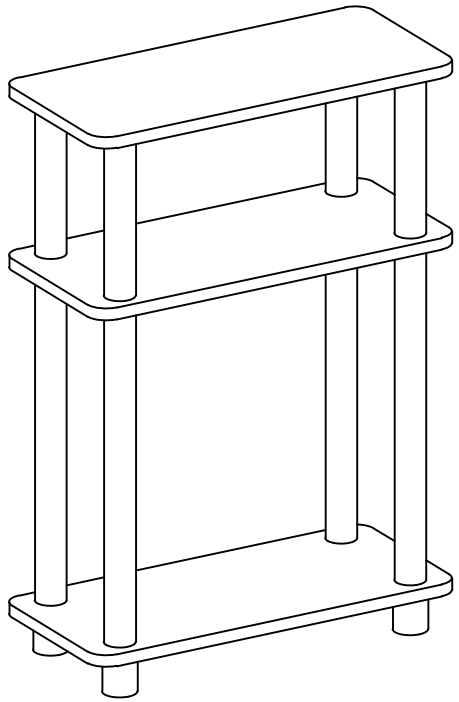

MODEL: 25591

2559120251110

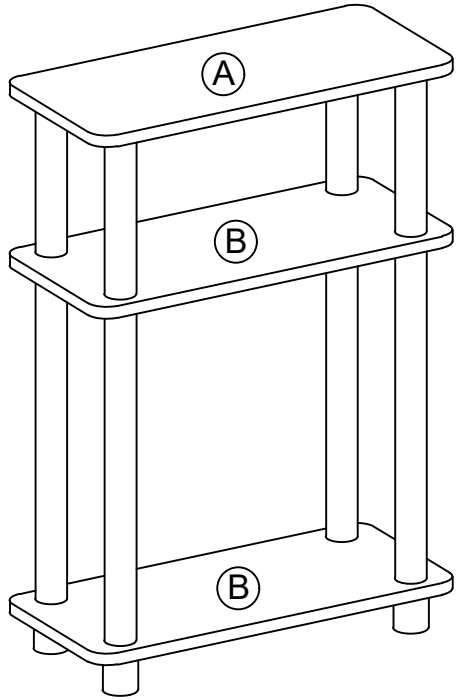

1	2	3
x 4	x 4	x 4
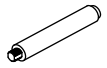	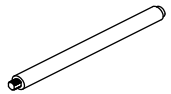	
162mm	340mm	34 x 38mm

1

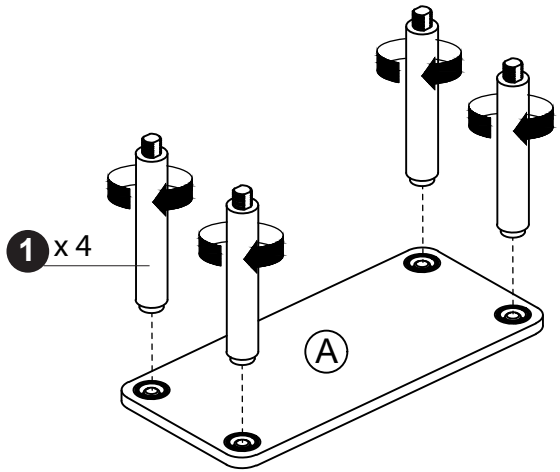

2

