Installation Guide and Users Manual

Professional Series

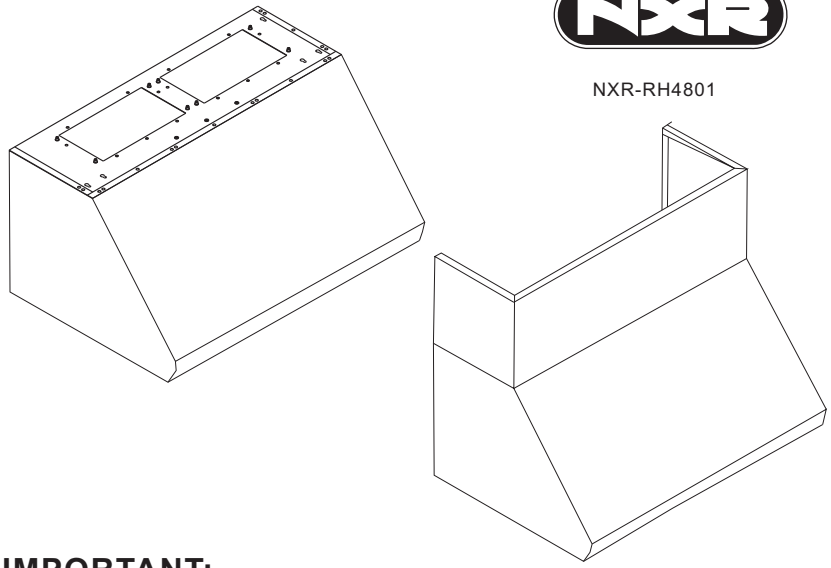

NXR-RH4801

IMPORTANT:
Read and save these instructions.

NOTICE:
Installer:Leave this guide with the homeowner
Homeowner:Keep this guide for future reference

Under Cabinet/Wall Mount Range Hood

Duro Corporation
17018 Evergreen Place
City Of Industry,CA 91745
Service Tel:1877 639 7264
Product Information:1-888-909-8818

Warranty

Duro is not responsible for incidental or consequential damages.Under no circumstances will Duro's liability exceed the cost that you paid for the product.Some provinces/states do not allow the exclusion or limitation of incidental or consequential damages,so the above limitation or exclusion may not apply to you.

This warranty gives you specific legal rights,and you may also have other rights that wary from state to state.

Whenever you call our Customer Service at 1-877-639-7264 for technical information and parts sales in The United States or to request service for your appliance,please have your complete model number and serial number ready.The model and serial number can be found on the product data plate.Please enter the information requested in the spaces provided below:

Model No. _____ Serial No. _____
Date Purchased _____ Date Installed _____
Purchased From _____
Address _____
Phone _____

NOTE:You must provide proof of purchase or installation date for in-warranty service.

Warranty

TO OBTAIN SERVICE UNDER WARRANTY:

You must present of original purchase date.

Please provide an original dated proof of purchase(sales receipt/invoice)in order to obtain service under warranty

Manufacture's Limited Warranty

This Product has been manufactured by Duro Corporation 17018 EVERGREEN PLACE CITY OF INDUSTRY,CA 91745.

Duro Corporation disclaims all express warranties except for the following:

This warranty applies to products purchased and located in the United States.Products purchased or located outside these areas are excluded.

The warranty does not apply to damage resulting from abuse,accident,natural disaster,loss of electrical power to the product for any reason, alteration,outdoor use,improper installation,improper operation,or repair or service of the product by anyone other than an authorized Duro Corporation service agency or representative.

Warranties and Duration

Full Warranty for Parts&Labor:1 Year

Implied warranties terminate upon expiration of the limited warranty.Sone states do not allow limitation on how long an implied warranty lasts,so the above limitation may not apply to your implied warranty.

Duro will pay for:

All repair labor and the cost of replacement parts found to be defective due to materials and workmanship.Service must be provided by a DURO Authorized Service Agency during normal working hours.For a Service Agency nearest you,please call 1-877-639-7264.

Duro will not pay for:

1.Service by an unauthorized agency.Damage or repairs due to service by an unauthorized agency or use of unauthorized parts.

2.Service visits to:

a.Teach you how to use the appliance.

b.Correct the installation.You are responsible for providing electrical wiring and other connecting facilities.

c.Reset circuit breakers or replace home fuses.

3.The warranty does not apply to damage caused from accident,alteration,misuse,abuse,improper installation or installation not in accordanc with local electrical codes or plumbing codes,or improper storage of the appliance.

4.The warrany does not apply to repairs other than normal home use.

5.Travel or trip fees and associated charges incurred when the product is installed in a location with limited or restricted access.(i.e.airplan flights, ferry charges,isolated geographic regions).

The warranty applies to appliances purchased and used by consumers for personal,family,or household purposes only.It does not cove r appliances used in commercial applications.

Should the appliance be sold by the original purchaser during the warranty period,the warranty extends to the new owner until the expiration date of the expiration date of the original purchaser's warranty period.

Thank you for purchasing your NXR range hood.We appreciate your business and we recommend that you read this entire user's manual before operating your new appliance for the first time.

This manual contains instructions on how to properly install and set up your new range hood,as well as insights into many of the unique features that our product offers.Please keep this manual for future reference,as it contains the answers to questions that you might have as you begin to cook.

Thank you,

Duro Corporation

WARNING

If not installed,operated and maintained in accordance with the manufacturer's instructions,this product could expose you to fuel or fuel combustion substances,which can cause death or serious illness and which are known to the State of California to cause cancer,birth defects or other reproductive harm.

The State of California enacted the California Safe Drinking Water and Toxic Enforcement Act of 1986,(Prop.65),which"prohibits any person in the course of doing business from knowingly and intentionally exposing any individual to a chemical known to the State of California to cause cancer or reproductive toxicity without first giving clear and reasonable warning to such individuals."The Governor's Scientific Advisory Panel added carbon monoxide to the list of hazardous chemicals known to cause reproductive harm.

In order to establish full compliance with Proposition 65,a yellow warning label has been attached to each gas-fired unit manufactured by **The Company.**

Carbon monoxide would not be present in concentrations that would pose a "significant risk" to the consumer when the equipment is installed, operated and maintained as follows:

1.Installed in accordance with all local codes, or in the absence of local codes, with the current National Fuel Gas Code ANSI Z223.1 Latest Addenda.
2.Installed under a properly designed and operating exhaust hood.
3.Connected to the type of gas for which the unit is equipped.
4.Proper appliance pressure regulator installed on the gas supply line and adjusted for the manifold pressure marked on the rating plate.
5.Adequate air supply to the unit.
6.The equipment is operated in the manner intended and using the proper utensil for that type of appliance.
7.Keep the equipment clean and have it checked periodically.
8.Burner air adjustments,mechanical maintenance and repairs must be performed by qualified service personnel.

WARNING ***If the equipment is not installed,operated and maintained in accordance with the above requirements,concentrations of carbon monoxide in excess of the established limits could be present in the kitchen environment.***

** **ALL PERSONNEL IN THE WORKPLACE WHO MAY BE SUBJECT TO ANY EXPOSURE OF CARBON MONOXIDE MUST BE WARNED OF SUCH POSSIBLE EXPOSURE.THIS WARNING SHOULD BE CONVERYED IN A MANNER SO THAT IT IS CLEARLY UNDERSTOOD BY THE EMPLOYEE.THE EMPLOYEE MUST BE ASKED IF IN FACT HE OR SHE UNDERSTANDS THE CORRECT METHOD OF OPERATION OF THE EQUIPMENT AND THAT A RISK OF EXPOSURE EXISTS IF THE EQUIPMENT IS OPERATED IMPROPERLY.**

Maintenance

SAFETY WARNING:Never put your hand into area housing the fan while the fan is operating!

For optimal operation,clean range hood and all baffle/spacer/filter/grease tunnel/oil container regularly/Regular care will help preserve the appliance of the range hood.

Cleaning Exterior surfaces:

- Clean periodically with hot soapy and clean cotton cloth.DO NOT use corrosive or abrasive detergent,or steel wool/scoring pads,which will scratch and damage the stainless steel surface.For heavier soil use liquid degrease such as "Forumla 409" or "Fantastic"brand cleaner.
- If hood looks splotchy(stainless steel hood),use a stainless steel cleaner to clean the surface of the hood.Avoid getting cleaning solution onto or into the control panel.Follow directions of the stainless steel cleaner.**CAUTION:DO NOT leave on too long as this may cause damage to hood finish.**Use soft towel to wipe off the cleaning solution,gently rub off any stubborn spots. Use dry towel to dry the hood.
- After cleaning,you may use non abrasive stainless steel polish such as SM or ZEP,to polish and buff out the stainless luster and grain .Always scrub lightly,with clean cotton cloth,and with the grain.
- DO NOT allow deposits to accumulate or remain on the hood.
- DO NOT use ordinary steel wool or steel brushes.Small bits of steel may adhere to the surface and cause rusting.
- DO NOT allow salt solutions,disinfectants,bleaches,or cleaning compounds to remain in contact with stainless steel for extended periods.Many of these compounds contain chemicals,which may be harmful.Rings with water exposure and wipe dry with a clean cloth.

Cleaning Stainless Steel Baffle Filter:

IMPORTANT: Drain oil from baffles,spacers,filters,oil tunnels,oil containers before oil residue overflow!

- Remove all baffles,spacers,filters,grease tunnel,and oil containers and discard oil and residue.
- Wash with warm soapy water.NOTE:Stainless steel baffles,spacers and oil tunnel are top rack dishwasher safe.
- Dry thoroughly before replacing and follow directions for installation in reverse.
- Filters should be cleaned after every 30 hours of use.

Replacing the light bulb:

- This range hood uses halogen bulb
- Make sure the range hood is unplugged or turn OFF breaker.
  1.Place a flat-head screwdriver between light cover and housing to remove cover.
  2.Gently pull defective bulb straight out and discard.
  3.Wear a cotton glove or use a cloth to handle the replacement bulb(DO NOT handle with bare fingers as this may shorten the life of the bulb).Push gently but securely into light socket.NOTE:DO NOT push too hard as bulb "legs" may break off.
  4.Replace light cover.
- Turn ON breaker and range hood to rest for operation.

Range Hood Assembly:

No.	Description	No.	Description
8.1	Bolt	8.4	Electrical Box Cover
8.2	Electrical Box Base	8.5	Processor Board
8.3	Capacitor	8.6	Electrical Box

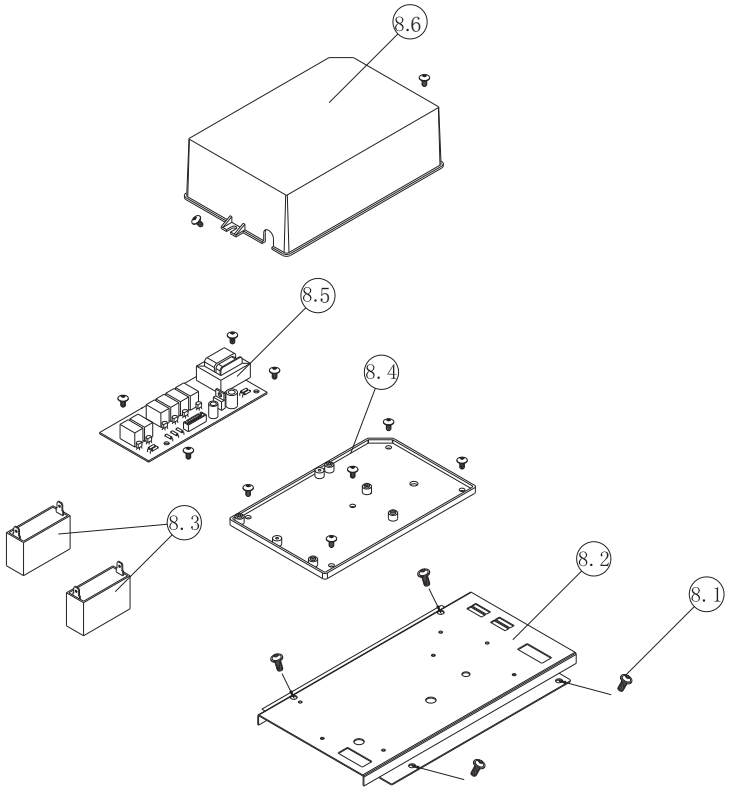

Important Safety Notice

Read all Instructions before Installing and operating this appliance

- The installation in this manual is intended for qualified installers, service technicians or persons with similar qualified background. Installation and electrical wiring must be done by qualified professionals and in accordance with all appliance codes and standards, including fire-rated construction.
- DO NOT attempt to install this appliance yourself. Injury could result from installing the unit due to lack of appropriate electrical and technical background.
- Range hood may have very sharp edges;please wear protective gloves if it is necessary to remove any parts for installing,cleaning or servicing.
- Activating any switch ON before completing installation may cause ignition or an explosion.
- Due to the size and weight of this range hood,two people installation is recommended.

To reduce the risk of fire,electric shock,or injury to persons:

- For general ventilating use only.DO NOT use to exhaust hazardous or explosive materials and vapors.
- The combustion air flow needed for safe operation of fuel-burning equipment may be affected by this unit's operation.Follow the heating equipment manufacturer's guideline and safety standards such as those published by the National Fire Protection Association(NFPA),and the American Society of Heating. Refrigeration and Air Conditioning Engineers(ASHRAE),and the local code authorities.
- Before servicing or cleaning unit, switch power OFF at service panel and lock service panel to prevent power from being switched ON accidentally.
- Clean grease laden surfaces frequently.To reduce the risk of fire and to disperse air properly,make sure to vent air outside.DO NOT vent exhaust into spaces between walls,crawl spaces,ceiling,attics or garages.
- Ducted fan MUST always be vented to the outdoors.
- Use only metal ductwork and this unit MUST be grounded.
- Sufficient air is needed for proper combustion and exhausting of gases through the duct to prevent back drafting.
- When cutting or drilling into wall or ceiling,be careful not to damage electrical wiring or other hidden utilities.
- All electrical wiring must be properly installed,insulated and grounded.
- Old duct work should be cleaned or replaced if necessary to avoid the possibility of a grease fire.
- Check all joints on duct work to insure proper connection and all joints should be properly taped.
- Use this unit only in the manner intended by the manufacturer.If you have questions,contact the vendor.

To reduce the risk of a stove top grease fire:

- Keep all fan,baffle,spaces,filter,grease tunnel,oil container and grease-laden surfaces clean.Grease should not be allowed to accumulate on fan,baffle,spaces,filter,grease tunnel and oil container.
- Always turn range hood ON when cooking at high heat or when flaming foods.
- Use high setting on cooking range only when necessary.
- Never leave surface units unattended at high settings.Boil over cause smoking and greasy spillovers that may ignite.Heat oils slowly on low or medium settings.

Important Safety Notice

Read all Instructions before Installing and operating this appliance

- Clean ventilation fan frequently.
- Always use appropriate cookware and utensils size.
- Always use cookware appropriate for the size of the surface element.

To reduce the risk of injury to person in the event of a stove top grease fire:

- SMOTHER FLAMES with a close-fitting lid,cookie sheet,or metal tray,then turn OFF the burner.BECAREFUL TO PREVENT BURNS. NEVER PICK UP A FLAMING PAN-you may be burned.KEEP FLAMMABLE OR COMBUSTIBLE MATERIAL AWAY FROM FLAMES. if the flames DO
- NOT go out immediately,EVACUATE AND CALL THE FIRE DEPARTMENT OR 911.
- DO NOT USE WATER,including wet dishcloths or towels-a violent steam explosion with result.
- Use an extinguisher ONLY if:
  - You know you have a Class A,B,C extinguisher,and you already know how to operate it.
  - The fire is small and contained in the area where it is started.
  - The fire department is being called.

  You can fight the fire with your back to an exit.

- **To reduce the risk of injury to persons in the event of a gas leaks:**
- Extinguish any open flame.
- DO NOT turn on the lights or any type of appliance.

  Open all doors and windows to disperse the gas.If you still smell gas,call the gas company and fire department,or 911 immediately.

Your safety and the safety of others is very important.We have provided many important safety messages in this manual and on your appliance. Always read and obey all safety message.All safety messages will tell you what the potential hazard is,tell you how to reduce the chance of injury,and tell you what can happen if the instructions are not followed.

WARNING

This is the safety alert symbol.This symbol alerts you to potential hazards that can hurt you and others.All safety messages will follow the safety alert symbol and the word “WARNING.”

Range Hood Assembly:

No.	Description	No.	Description
1	Hood Casing	10	Oil Tunnel
2	Screws	11	Light Panel
3	Hood-Mountinf Bracket	12	Light
4	Power Wire	13	Stainless Steel Spacer
5	Ducting Transtion	14	Baffle Filter Handle
6	Screw	15	Screws
7	Blower Assembly	16	Switch Assembly
8	Electrical Assembly	17	Baffle Filter
9	Panel		

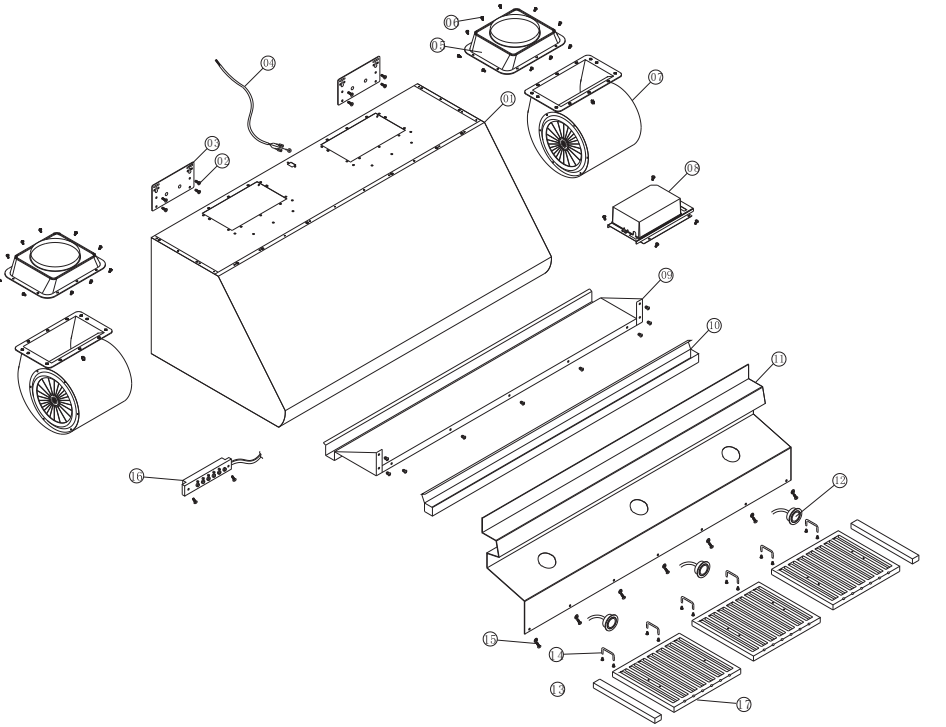

Baffle Filters and Stainless Steel Spacers:

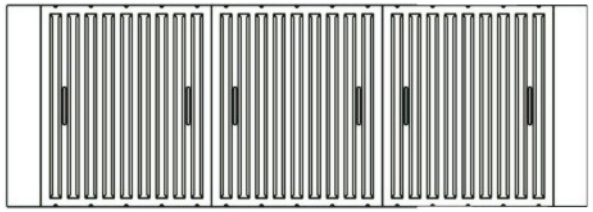

Circuit Diagram:

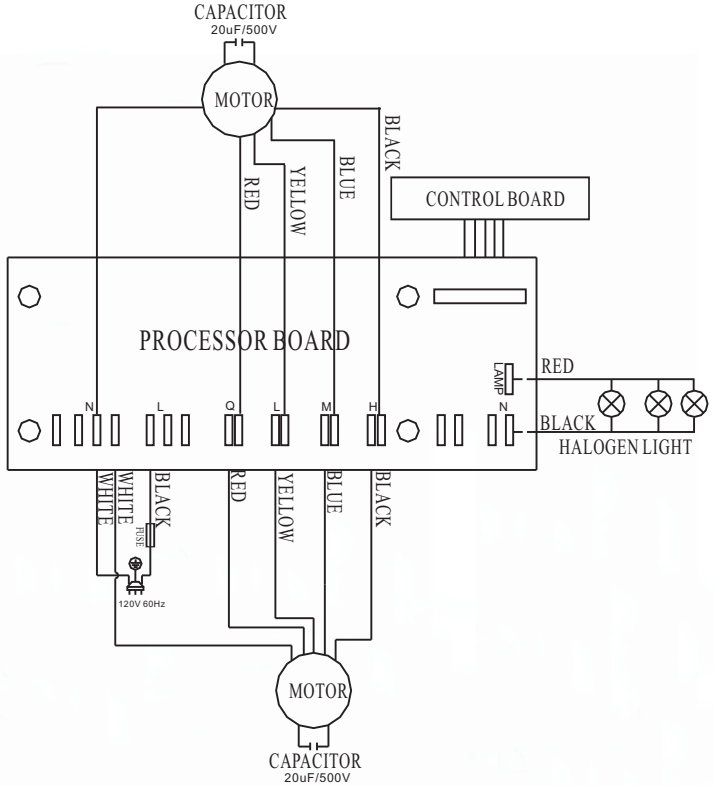

Parts supplied:

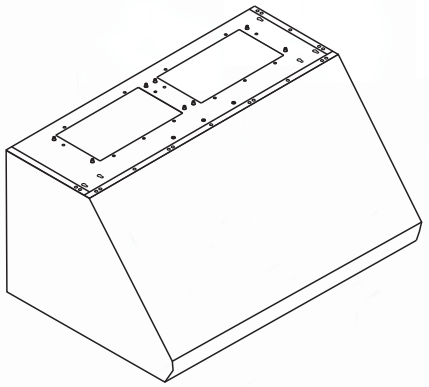

Under Cabinet Range Hood

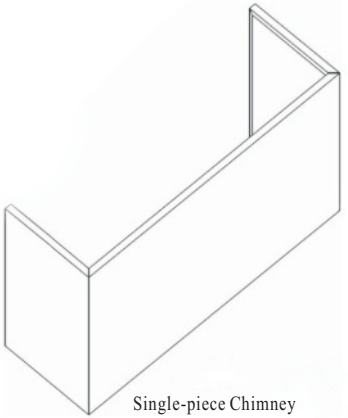

Single-piece Chimney
(Optional,sold separately)

Type A
Length:1-3/5"
Qty: 4 PCS
(For sheet rock only)

Type B
(Connect to typeA)
Length:1-3/10"
Qty:4PCS

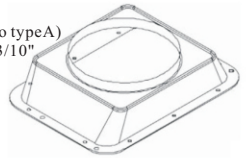

Ducting Transition(Qty:2PCS)

Hood-mounting Bracket (Qty: 2PCS)

Type C(For Hood-mounting Bracket)
Length:3/10"
Qty:8PCS

Type D(For Ducting Transition)
Length:1/2"
Qty: 20PCS
(Round head)

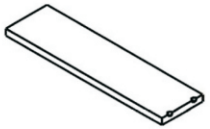

Baffle Filter Spacer (Qty:2PCS)

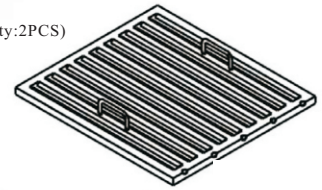

Baffle Filters (Qty:3PCS)

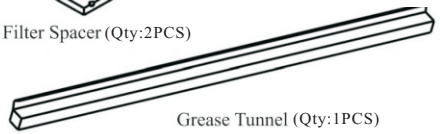

Grease Tunnel (Qty:1PCS)

Venting Requirements& Recommendation

- Vent system must terminate to the outside (roof or side wall).
- DO NOT terminate the vent system in an attic or other enclosed area.
- DO NOT use 4" (10.2 cm) laundry-type wall caps.
- Use metal/aluminum vent only. Rigid metal/aluminum vent is recommended.
- DO NOT use plastic vent.
- Always keep the duct clean to ensure proper airflow.
- Calculate the following figures before installation:
  1. *Distance from the floor to the ceiling.*
  2. *Distance between the floor to the countertop/stove.*
  3. *Distance between the countertop/stove to the range hood(recommend* 27" to 30").*
  4. *Height of hood and duct cover.*

For the most efficient & quiet operation:

- A distance of 27" to 30" is recommended* between stove top and the bottom of range hood.
- It is recommended that the range hood be vented vertically through the roof through 8" (17.8 cm) or bigger round metal/aluminum vent work.
- The size of the vent should be uniform.
- Use no more than three 90° elbows.
- Make sure there is a minimum of 24" (61 cm) of straight vent between the elbows if more than one elbow is used.
- DO NOT install two elbows together.
- The length of vent system and number of elbows should be kept to a minimum to provide efficient performance.
- The vent system must have a damper. If roof or wall cap has a damper, DO NOT use damper (if supplied) on top of the range hood.
- Use silver tape or duct tape to seal all joints in the vent system.
- Use caulking to seal exterior wall or roof opening around the cap.

* Due to different ceiling height configurations, recommended height may not be applicable.

Height&Clearance

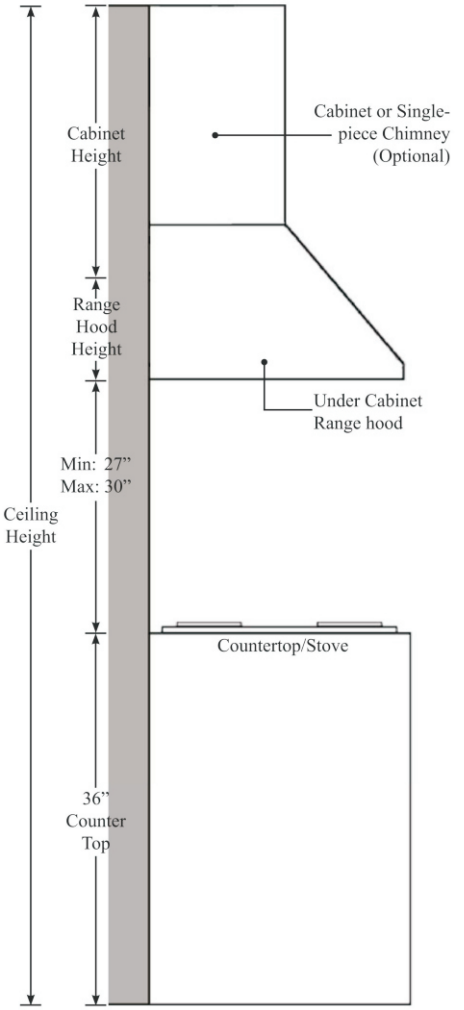

- All measurements in parenthesis are in millimeter.
- All inch measurements are converted from millimeters, thus inch measurements are estimated.

Rear Knockout Holes:

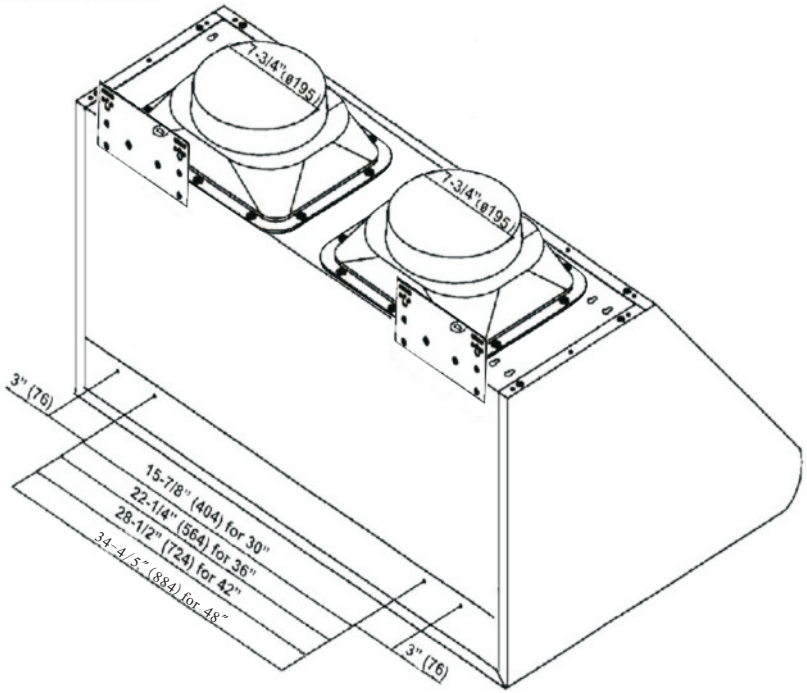

Hood-mounting Bracket:

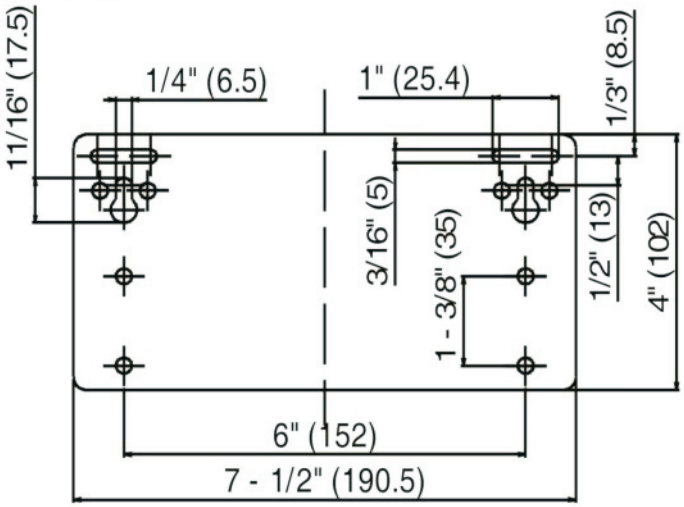

- All measurements in parenthesis are in millimeter.
- All inch measurements are converted from millimeters, thus inch measurements are estimated.

Without hood-mounting bracket:

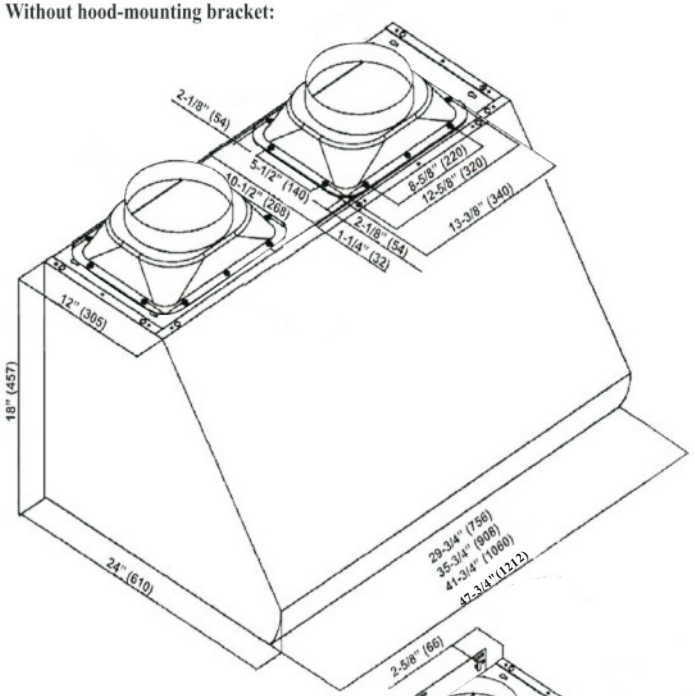

With hood-mounting bracket:

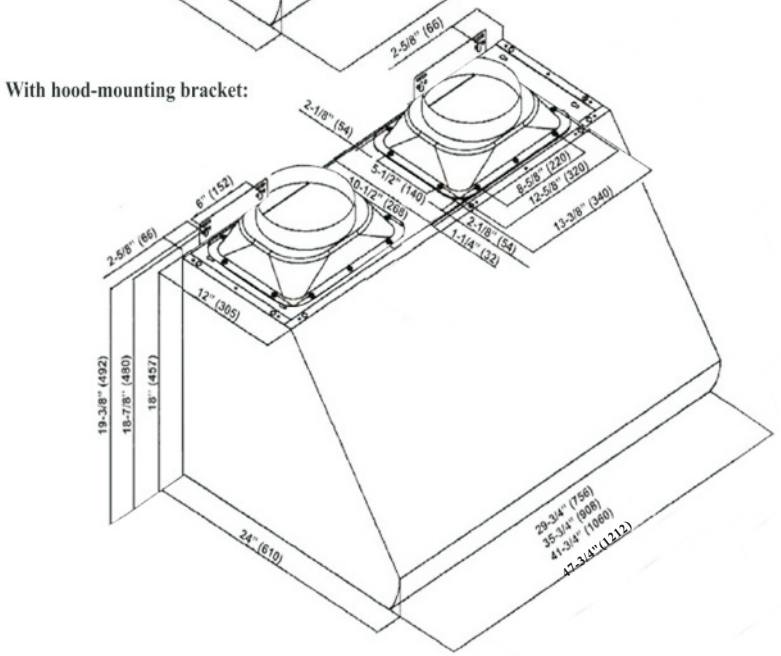

IMPORTANT:

- A minimum of 8" round (standard for this range hood) or 3-1/4 x 10" rectangular duct (purchased separately) must be used to maintain maximum airflow efficiency.
- Always use rigid type metal/aluminum ducts if available to maximize airflow when connecting to provided duct.
- Please use *Duct Run Calculation* below to compute total available duct run when using elbows, transitions and caps.
- ALWAYS, when possible, reduce the number or transitions and turns. If long duct run is required, increase duct size from 8" to 9" or 10". If a reducer is used, install a long reducer instead of a pancake reducer. Reducing duct size will restrict airflow and decrease airflow, thus reduce duct size as far away from opening as possible.
- If turns or transitions are required: Install as far away from opening and as far apart, between 2, as possible.
- Minimum mount height between stove top to hood bottom should be no less than 27-inch*.
- Maximum mount height between stove top to hood bottom should be no higher than 30-inch*.
- It is important to install the hood at the proper mounting height. Hoods mounted too low could result in heat damage and fire hazard; while hoods mounted too high will be hard to reach and will loose its performance and efficiency.
- If available, also refer to stove top manufacturer's height clearance requirements and recommended hood mounting height above range.

  * Due to different ceiling height configurations, recommended height may not be applicable.

Minimum Duct Size:

- Round - 8" minimum
- Rectangular - 3-1/4 x 10" minimum (requires a 8" to 3-1/4x10" adaptor, not supplied)

Calculating Vent System Length

To calculate the length of the system you need, deduct the equivalent feet for each vent piece used in the system from the recommended maximum duct run.

Duct Run Calculation:	
Recommended maximum run	
8" or 3-1/4 x 10" duct	50 ft
Vent piece deduction	
Each 90º elbow used	9 ft
Each 45º elbow used	5 ft
Each 8" to 3/14 x 10" transition used	7 ft
Side wall cap with damper	0 ft
Roof cap	0 ft

Duct Run Calcuation example:

One roof cap, two 90º elbow, and one 45º elbow used:

0ft + 9ft + 9ft + 5ft = 23ft used.

Deduct 23ft from 50ft, 27ft maximum available for straight duct run.

Venting Methods

- This range hood is factory set for venting through the roof or wall.
- Vent work can terminate either through the roof or wall. To vent through a wall, a 90° elbow is needed.

IMPORTANT:

- NEVER exhaust air or terminate duct work into spaces between walls, crawl spaces, ceiling, attics or garages. All exhaust must be ducted to the outside.
- Use metal/aluminum duct work only.
- Fasten all connections with sheet metal screws and tape all joints with certified Silver Tape or Duct Tape.
- Use caulking to seal exterior wall or roof opening around the cap.

Horizontal wall venting

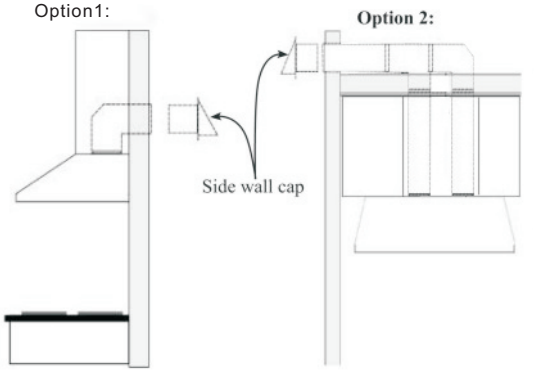

Vertical roof venting

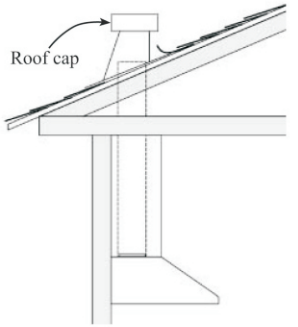

Measurements and Diagrams

- All measurements in parenthesis are in millimeter.
- All inch measurements are converted from millimeters, thus inch measurements are estimated.

With optional single-piece chimney:

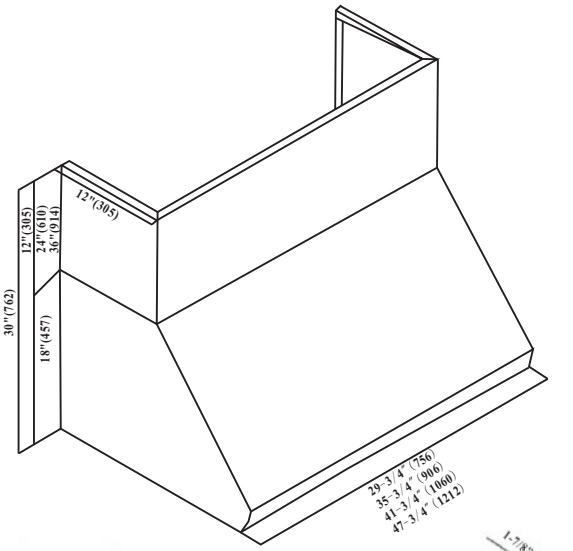

Without optional single-piece chimney:

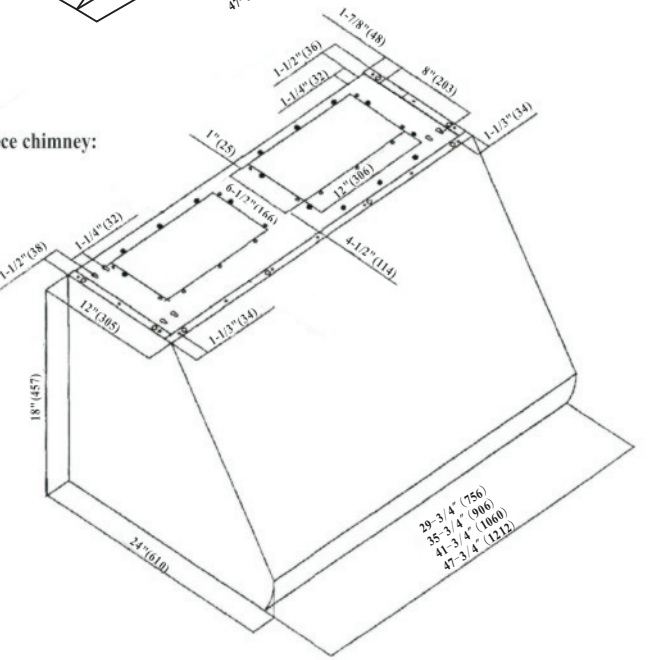

Use and Care Information

Operations:

- Read and understand all instructions and warnings in this manual before operating the appliance.Save these instructions for future reference.
- Always leave safety grills and filters in place.Without these components,operating blowers could catch on to hair,finger and loose clothing.
- NEVER dispose cigarette ashes,ignitable substances,or any foreign objects into blowers.
- NEVER leave cooking unattended.When frying,oil in the pan can easily overheat and catch fire.The risk of self combustion is higher when the oil has been used several times.
- NEVER cook on "open"flames under the range hood.Check deep-fryers during use:Superheated oil may be flammable.

Cleaning:

- The saturation of greasy residue in the blower and filters may cause increased inflammability.Keep unit clean and free of grease and residue built up at all times to prevent possible fires.
- Filters must be cleaned periodically and free from accumulation of cooking residue.Old and worn filters must be replaced immediately.
- DO NOT operate blowers when filters are removed.Never disassemble parts to clean without proper instructions. Disassembly is recommended to be performed by qualified personnel only.Read and understand all instructions and warnings in this manual before proceeding.

Specifications

Specifications	
Body Design	Stainless Steel,Satin Finish
Power Rating	120V/60Hz(USA&Canada standard)
General Input Power	425W(320W+2X35W)
Motor Input Power	320W
Ampere	2.7A
Levels Of Speed Control	4 Levels
Airflow(Q/L/M/H)	400CFM/800CFM/1000CFM/1200CFM
Noise Level(Q/L/M/H)	1.4sone(45dB)/3.5sone(58dB)/7.0sone(68dB)/8.0sone(70dB)
Number Of Motors	Twin Motor
Motor Type	Dual Chamber Ultra Quiet
Fan Type	Dual Centrifugal Squirrel Cage
Control Type	Electronic Button Control Panel
Filtration Type	Stainless Steel Baffle Filter
Illumination	Gu10
Venting Size	Top Transition Rectangular to 8 inch Round

Electrical Requirements

IMPORTANT: Observe all governing codes and ordinances.

It is the customer's responsibility:

- To contact a qualified electrical installer.

If codes permit and a separate ground wire is used, it is recommended that a qualified electrician determine that the ground path is adequate.
A 120-Volt, 60 Hz, AC-only, fused electrical supply is required on a separate 15-amp circuit, fused on both sides of the line.
DO NOT ground to a gas pipe.
Check with a qualified electrician if you are not sure that the range hood is properly grounded.
DO NOT have a fuse in the neutral or ground circuit.

IMPORTANT: Save this Installation Guide for electrical inspector's use.

Preparation

Advanced Preparations:

- Be familiar with the controls of the range hood by reading through ***Range Hood Operations***, Page 12.
- Place the range hood on a flat, stable surface. Connect the range hood to a designated standard outlet (120-Volt, 60Hz, AC only) and turn on the range hood. Verify all operations of the range hood by referring to ***Range Hood Operations*** Page 13.
- Place all supplied parts and required hardware on a flat, stable surface and verify the existence of all supplied parts listed on Page 4.
- Carefully remove the white plastic protective coat from the range hood.

Preparations:

NOTE: To avoid damage to your hood, prevent debris from entering the vent opening.

- Decide the location of the venting pipe from the hood to the outside. Refer to *Venting Methods* on Page 7.
- A straight, short vent run will allow the hood to perform more efficiently.
- Try to avoid as many transitions, elbows, and long run as possible. This may reduce the performance of the hood.
- IMPORTANT: Peel white plastic protective coat off the hood, if any.
- Use silver tape or duct tape to seal joints between pipe sections.
- For installing under the cabinet with recessed bottom, attach 4-inch wide wood filler strips (not provided) on each side. Refer to Figure 1.
- Using references in *Measurements and Diagrams* on Page 16, create access opening for electrical wires and hood exhaust under the cabinet.

CAUTION: If moving the cooking range is necessary to install the hood, turn OFF the power on an electric range at the main electrical box. SHUT OFF THE GAS BEFORE MOVING A GAS RANGE.

- Puncture the knockout holes (for mounting under the cabinet) on the hood as shown in Figure 2.
- If necessary, attach two rubber stands with 3M adhesive tapes to the back corners of the hood.
- Attach ducting transition to hood exhaust with included 10 round head screws as shown in Figure 3.

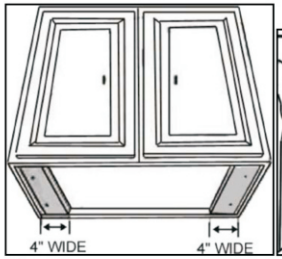

Figure 1

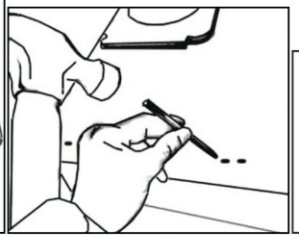
Figure 2

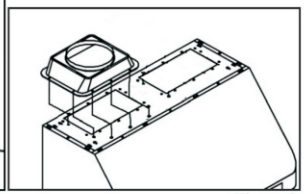
Figure 3

Troubleshooting

1. If the range hood or halogen light does not operate after installation:	• Check if the range hood has been plugged in, make sure that all power has been turned back ON, fused not blown and all electrical wiring are properly connected. • Swap out light assembly to working ones to determine whether it is caused by defective bulbs. See *Replacing the light bulbs* on Page 23.
2. The range hood vibrates when the blower is on:	• The range hood might not have been secured properly on to the ceiling or wall.
3. The blower or fan seems weak:	• Check that the duct sized used is at least 8" or 3-1/4 x 10". Range hood WILL NOT function efficiently with insufficient duct size. For example: 9" duct over 8" hole and loosely secured. • Check if duct is clogged or if damper unit (half-circular flapper) is not installed correctly or opening properly. A tight mesh on a side wall cap unit might also cause restriction to the air flow.
4. The lights work but the blower is not spinning at all, is stuck or is rattling.	• The blower might be jammed or scraping the bottom due to shipping damage. Please contact us immediately.
5. The hood is not venting out properly:	• Make sure the distance between the stove top and the bottom of the hood is within* 27" and 30" in distance. **Due to different ceiling height configurations, recommended height may not be applicable.* • Reduce the number of elbows and length of duct work. Check if all joints are properly connected, sealed, and taped. • Make sure the power is on high speed for heavy cooking.

Range Hood Operations(Continued)

Control Panel Layout and Buttons Configurations:

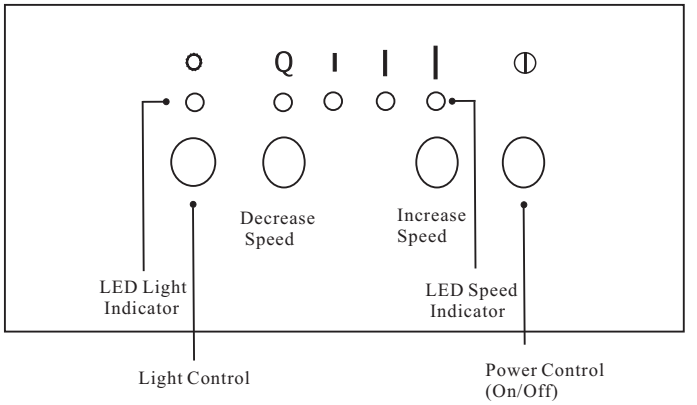

- During this 3-minutes delay,changing speeds will not affect the countdown.

Immediate Power-off

- While the fans are in 3-minute power-off delay mode,press the Power Control(on/Off)button once to turn OFF the fans immediately.
- When the fans are operating in normal mode(LED Speed Indicator not flashing),press the Power Control (On/Off)twice to turn OFF the fans.

Light Control:

Light Control button operates independently from the Power Control(On/Off) and power-off delay function.

Pressing the Power Control(On/Off)button or activating the dealy function will not turn halogen lights ON or OFF.**CAUTION:DO NOT touch the lights until switched OFF and cooled.**

- While the halogen lights are OFF,press the Light Control button once to turn halogen lights on.LED Light indicator will light up.
- Touch the Light Control button again will change the light intensity to Low.
- Each touch of the Light Control button will cycle the light intensity through High,Low and OFF.

Installation

Installations(refer to Page 4 for parts):

1.Measure the distance between stove top and the bottom of range hood.A distance of "27 to 30" is recommended**Due to difference ceiling height configurations,recommended height may not be applicable.*

1.You have two ways(Aor B)to mount this range hood:

A-1.Proceed if you would like to mount this range hood without using the hood-mounting bracket.

A-2.Using references in *Height&Clearance* on Page 5 and *Measurements and Diagrams* on Page 16,center the hood beneath the cabinet and flush with the front of the cabinet.

A-3.From inside of the hood,place screws into the exact center of each knockout hole and secure to cabinet bottom.Finish Fightening all screws until secure.Be careful when using electrical screwdriver,damage to the range hood may occur.Skip Part B below and proceed to Step 2.

CAUTION:Make certain the range hood is secure before releasing!

B-1.Proceed if you would like to mount this range hood using the provided hood-mounting bracket.

B-2.Using references in *Height&Clearance* on Page 5 and *Measurements and Diagrams* on Page 17,mark the leveling point of the hood.Position two mounting screws on the wall,leaving 1/8" space away from the wall.Mounting the hood on wall studs or lumbars is highly recommended.

B-3.Attach each hood-mounting bracket to the back of the hood with 4 flat head screws as shown in Figure 5.

B-4.Align hood-mounting bracket to the screws on the wall and hook hood into place as shown in Figure 6.Tighten screws to screws to secure hood to the wall.

CAUTION:Make certain the range hood is secure before releasing!

2.For safety purpose,pre-drilled mounting holes are provided through the back of the hood.For a more secure installation,use as many mounting holes as needed to secure from the inside of hood.

3.Use 8"round steel pipe(follow building codes in your area) to connect the exhaust on the hood to the duct-work above.Use silver tape or duct tape to make all joints secure and air tight.Refer to Figure 7.

SAFETY WARNING:Risk of electrical shock.this range hood must be properly grounded.Make sure this is done by qualified electrician in accordance with all applicable national and local electrical codes.Before connecting wires,switch power off at service panel and lock service panel to prevent power from being switched on accidentally.

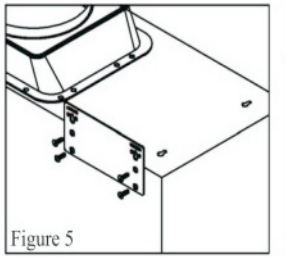
Figure 5

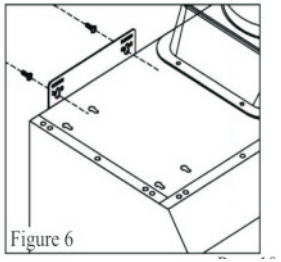
Figure 6

Installation(Continued)

4. **OPTIONAL: If you purchased a single-piece chimney cover, attach it to the hood in this step.**
5. Drop oil tunnel into recess support near rear of hood. Refer to Figure 9.
6. To install baffle filters and stainless spacer(s), refer to *Baffle Filters and Stainless Steel Spacers* on Page 18 for baffle filter and stainless spacer placement. Refer to Figure 10 for the following five steps:
   ① Angle baffle filter toward back of hood.
   ② Push baffle filter up until almost level.
   ③ Slide forward into recess behind the front of hood.
   ④ Lower baffle filter.
   ⑤ Slide back until it fits into resting positions.
7. Repeat Step 8 to install all baffle filters and stainless spacers.
8. Turn power ON in control panel.Check all lights and fan operations.
9. Make sure to leave this Installation Guide for the homeowner.

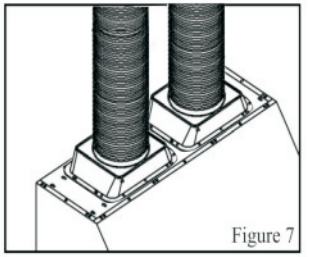
Figure 7

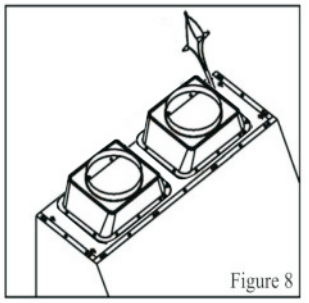
Figure 8

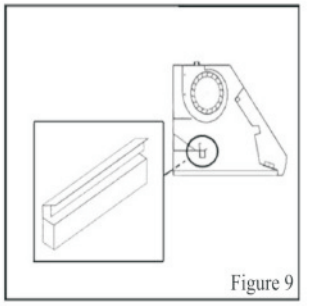
Figure 9

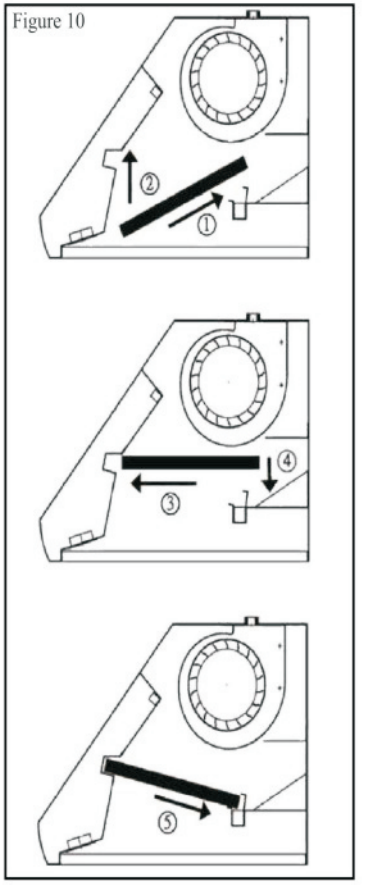

Figure 10

Range Hood Operations

Control Panel Layout and Buttons Configurations:

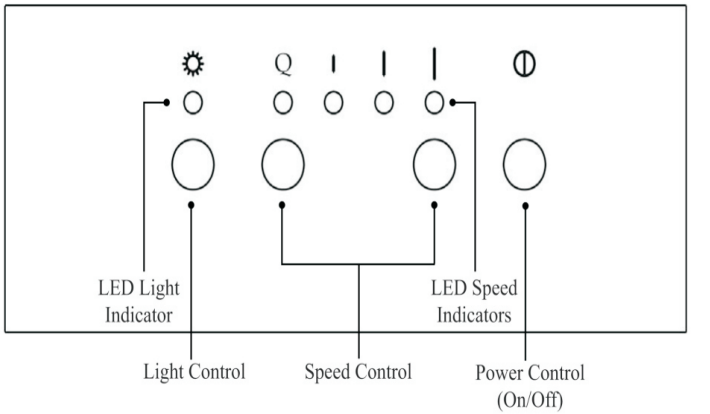

This range hood is equipped with four electronic controls, oversized powerful centrifugal squirrel cage motor with stainless steel grease tunnel, stainless steel baffle filters and spacers, two bright 12V 20W halogen lights and 120V 250W heating lamp sockets (heating lamps sold separately).

The four electronic buttons control the intensity of the Lights, Speeds (Quiet, Low, Medium and High) and Power (On/Off). The Power Control (On/Off) offers startup, 3-minute delay or immediate power-off. The Light Control operates independently from the Power Control (On/Off) and is not affected by the delay shutoff.

Turning Fan ON:
Always turn fans ON before cooking to establish air flow and allow fans to run for a few minutes after cooking for cleaner air in the kitchen. The Power Control (On/Off) button must be pressed before a Speed Control button can be activated. NOTE: The light setting will not be affected by the Power Control (On/Off) button.

- Press the Power Control (On/Off) button once. The four LED Speed Indicators above the Speed Control will flash, if a Speed Control button is not pressed within 10-seconds, power will be turn OFF automatically.
- While the LED Speed Indicators are flashing, press a Speed Control button to activate the fan at low speed (the corresponding LED Speed Indicator above the Speed Control bottons will light up.
- To change the fan speed, press Decrease Speed Control button or Inrease Speed Control button. Each press will cycle between Quiet, Low, Meduim and High Speed. The LED Speed Indicator above the Speed Control button will light up accordingly.

Turning Fan OFF:
The 3-minute power-off delay function will only turn OFF fans. The light settings will not be affected by the delay function.

Three-Minute Delay

- While the fans are operating, press Power Control (On/Off) button once, the LED Speed Indicator for the active speed will flash and fans will turn OFF after 3-minutes.