BRIGGS&STRATTON
ENERGY SOLUTIONS

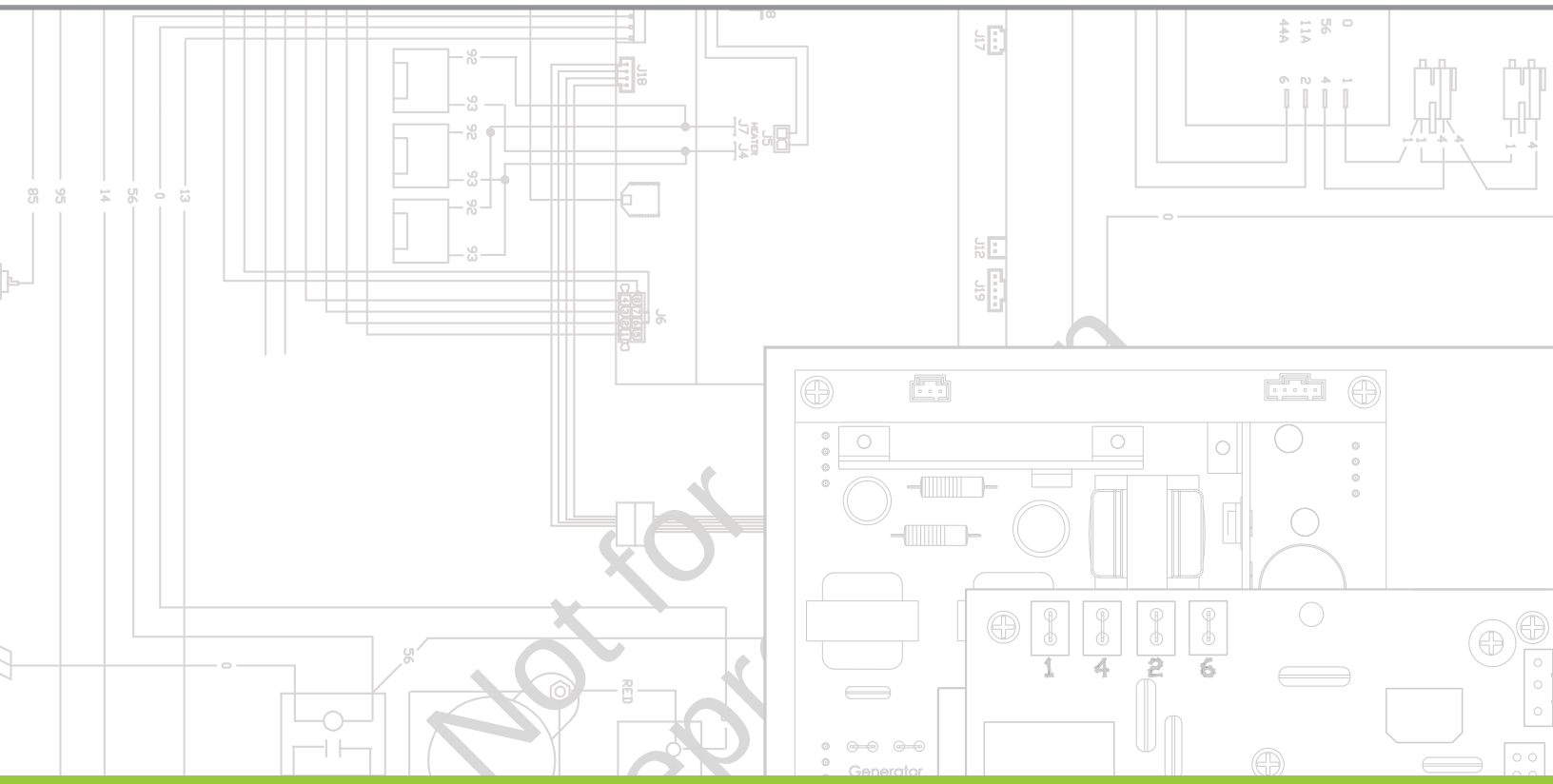

REPAIR / TROUBLESHOOTING

Air-Cooled Standby Generator

(With GC-1033 and SmartAVR2)

ELECTRICAL TROUBLESHOOTING AND REPAIR MANUAL

©2026 Briggs & Stratton. All Rights Reserved.

Part No. 80143528 Revision A
Published April 2026. Please visit energy.briggsandstratton.com for the latest information.

This page is intentionally left blank.

Not for Reproduction

Foreword

This manual provides important information about the proper preparation, installation, and operation of air cooled standby generators. Alternative methods or procedures can cause risk to personal safety and the safety and reliability of the standby generator and are not recommended by Briggs & Stratton®.

All information, illustrations, and specifications in this manual were based on the data available at the time of publication. Briggs & Stratton reserves the right to change, alter, or otherwise improve the product or the product manuals at any time without prior notice.

This printed copy may be out of date. Go to The Power Portal for the most up-to-date information.

Briggs & Stratton

P.O. Box 702

Milwaukee, WI 53201-0702

Copyright © 2026. All rights reserved. No part of this material may be reproduced or transmitted in any form without the express written permission of Briggs & Stratton.

Safety Symbols and Meanings

Symbol	Meaning
	Safety alert symbol shows a possible personal injury hazard.
	Read Manual. Failure to obey warnings, instructions, installation manual, and Operator's Manual could result in death or serious injury.
	Explosion
	Electric Shock
	Auto-start
	Fire
	Chemical Burn
	Toxic Fume
	Eye Protection
	Hot Surface
	Rotating Parts

Safety Information

WARNING 

Failure to read and obey the operator's manual, all warnings, and operating instructions could result in death or serious injury.

Power Academy

The Briggs & Stratton® Power Academy is a virtual learning hub offering various types of training options for selling, installing, and servicing energy solutions products. Self-paced eLearning, live, virtual, and in-person courses are offered to fit your schedule and learning style. Go to **www.briggsandstratton.com/poweracademy** to sign up for a new account or login to access training classes!

Document Sections

This repair manual is organized into the following major sections:

- Introduction, preliminary checks, and controller/AVR error messages.
- Sections 1-6: Linear Diagnostics Troubleshooting Methodology.
- Section 7: Final Checks.
- Section 8: Software Service Tools.
- Section 9: Removal and Installation.
- Section 10: Wiring Diagrams.

Service and Troubleshooting Website

For additional service and troubleshooting information, scan the QR code below:

Not for Reproduction

Introduction

This manual provides a linear path to correctly diagnose most generator problems.

Before you start the diagnosis, answer the questions listed in the *Preliminary Checks* and *Using Linear Diagnostics* sections.

This will determine the actual point at which to begin the diagnosis. Since it is possible that certain actions can have unexpected consequences, always return to “Does the engine crank?” after troubleshooting and performing any repair. Even if you are confident that a particular problem was corrected, continue to the very end of the diagnostics (*Section 5: Check the Switches*) to be sure that other problems do not exist.

NOTICE

For information on the location or replacement of components, see *Section 9: Removal and Installation*.

Before leaving the job site, do all of the checks in *Section 7: Final Checks*.

Unit Identification

This repair manual is applicable to Briggs & Stratton PowerProtect+™ generator units (Figure 1):

1

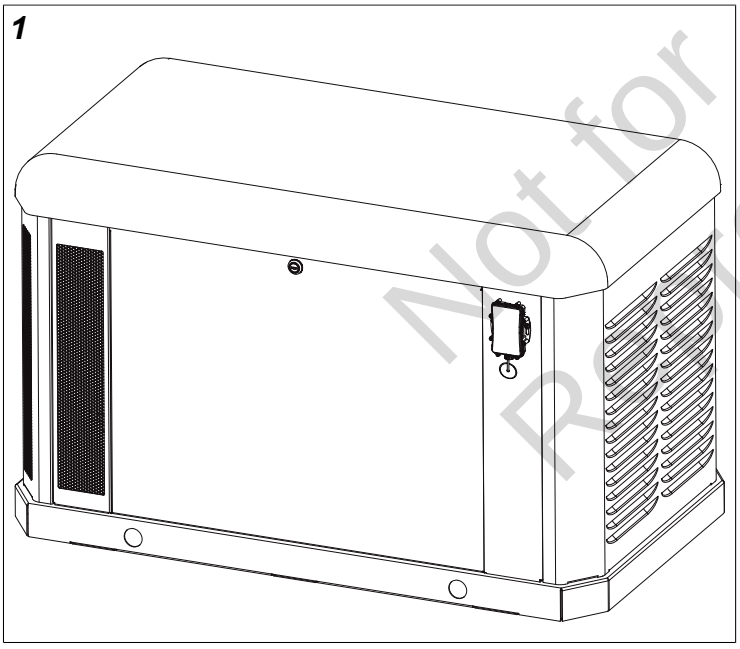

Each unit covered by this repair manual includes the following components (Figure 2):

2

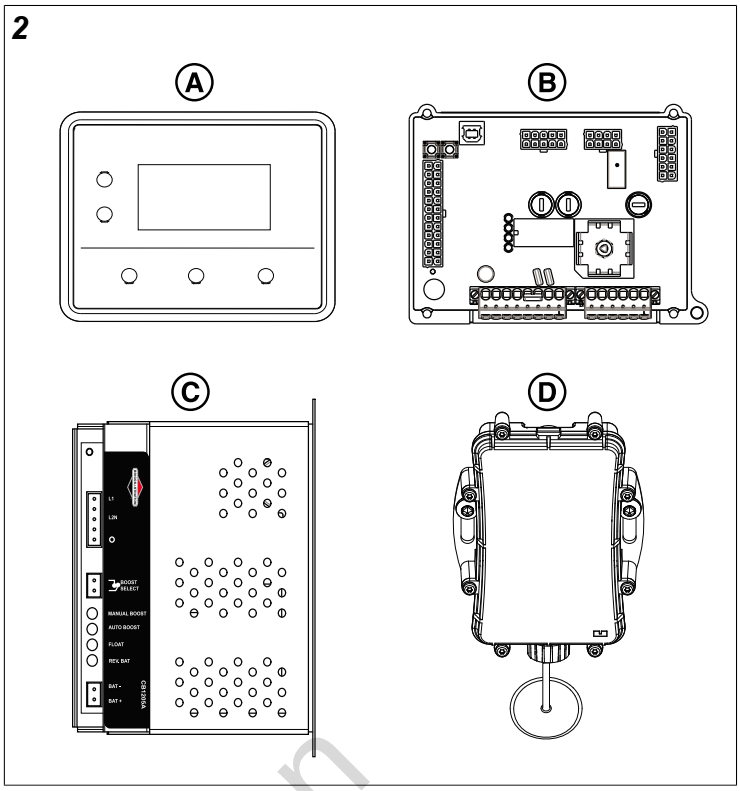

- (A) GC-1030 Series Controller
- (B) Smart AVR2
- (C) Battery Charger
- (D) EnergyTrak Generator Monitoring

Each unit covered by this repair manual also includes a new fuse block (Figure 3), which is located at the back of the generator near the engine compartment (A, Figure 4).

3

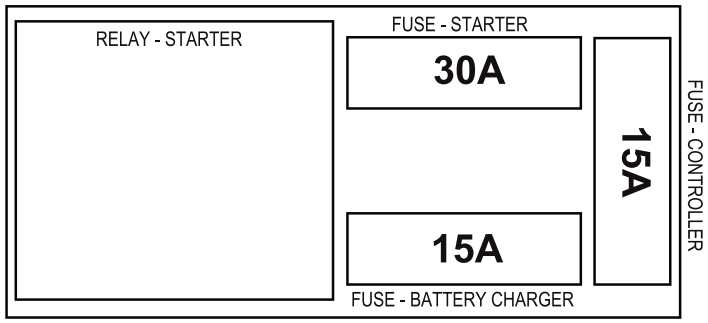

Not for Reproduction

4

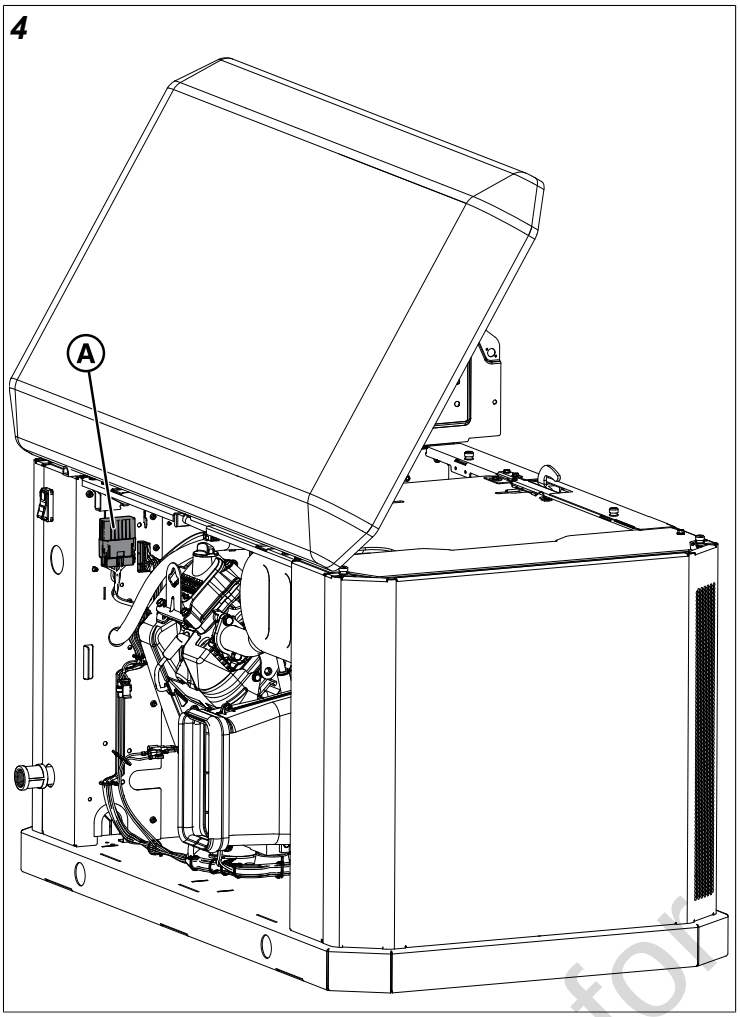

Preliminary Checks

These are some of the most common reasons a generator may fail to crank, start, or run. Complete each of the following tests **before** you go to *Using Linear Diagnostics*.

NOTICE
For further instructions on accessing components inside of the generator unit, refer to *Section 9: Removal and Installation*.

NOTICE
Additional documentation (service bulletins, operator's manuals, etc.) for specific components and parts are on the Briggs & Stratton Power Portal (https://www.thepowerportal.com).

Check Interior and Exterior of the Generator

1. Inspect the interior and exterior of the generator unit for any potential issues (loose connections, debris obstructing the air vents, etc.). Do you observe any issues?
   a. **Yes -** Correct any observed issues.
   b. **No -** Go to *Check Generator Emergency Shutdown (PMD) Switch*.

Check Generator Emergency Shutdown (PMD) Switch

1. Locate the Generator Emergency Shutdown switch [referred to as the Prime Mover Disconnect (PMD) for previous generator models]. Is the Generator Emergency Shutdown switch set to the ON position?
   a. **Yes -** Go to *Check Oil Level*.
   b. **No -** Set the Generator Emergency Shutdown switch to the ON position and go to *Check Oil Level*.

Check Oil Level

1. Check that the engine has been filled to the correct level with the recommended oil. Is the oil filled to the correct level?

NOTICE
For full instructions on checking the oil level, refer to *Section 9: Removal and Installation*, *Engine Oil Filter, Dipstick, and Drain Hose*.

   a. **Yes -** Go to *Check Battery Size and Type*.
   b. **No -** Slowly add oil until the correct oil level is reached. **DO NOT OVERFILL**.

Check Battery Size and Type

1. Inspect the battery size and type. Is the correct battery installed?
   a. **Yes -** Go to *Check Battery Connection and Polarity*.
   b. **No -** Install the correct battery.

Check Battery Connection and Polarity

1. The positive battery cable (red) must be connected to the positive battery (+) post and the negative battery cable (black) must be connected to the negative battery (-) post. Is the battery correctly connected?
   a. **Yes -** Go to *Check Circuit Breaker*.
   b. **No -** Correctly connect the battery.

Check Circuit Breaker

1. Is the generator circuit breaker set to the ON (Closed) position?
   a. **Yes -** Go to *Check Controller and ATM Fuse-Control (Main 15 Amp Fuse)*.
   b. **No -** Set the generator circuit breaker to the ON (Closed) position.

Check Controller and ATM Fuse-Control (Main 15 Amp Fuse)

1. Is the GC-1030 Series Controller powered on?
   a. **Yes -** Go to step 3.
   b. **No -** Go to step 2.

Not for Reproduction

2. Is the 15 amp ATM fuse for the controller installed in the fuse block, located in the engine compartment, and in good working order?
    a. **Yes -** Go to step 3.
    b. **No -** Install or replace the 15 amp ATM fuse in the fuse block.

NOTICE

Before replacing the fuse, inspect the wiring between the fuse block and the AVR and the wiring between the AVR and the controller. Repair or replace the wiring as necessary. Refer to *Check Electrical Wiring and Electronics* for more information.

3. Is a fault or alarm condition present on the controller?
    a. **Yes -** Navigate to the ALARMS and/or DM01 screens to record the fault/alarm condition(s). For additional information refer to Check the Controller for Error Messages. Go to Step 4.
    b. **No -** Go to step 4.
4. Is the controller set to **Auto Mode**?
    a. **Yes -** Go to *Check Fuel Delivery*.
    b. **No -** Is a fault present on the controller?
        1. **Yes -** Go to *Using Linear Diagnostics* for the corresponding fault displayed on the controller.
        2. **No -** Press AUTO/MANUAL on the controller. An LED illuminates to indicate that the system is in **Auto Mode**. Go to *Check Fuel Delivery*.

Check Fuel Delivery

1. Is sufficient fuel available in the fuel supply tank?

NOTICE

Fuel supply tank is only present on units with a liquid propane (LP) supply tank.

    a. **Yes -** Go to step 2.
    b. **No -** Replenish the fuel supply.
2. Are the main fuel supply valve and any in-line fuel shutoff valves open?
    a. **Yes -** Go to *Check Fuel Pressure*.
    b. **No -** Open the main fuel supply valve and any in-line fuel shutoff valves.

Check Fuel Pressure

1. Measuring for inches of water column (WC), the generator inlet fuel pressure should be 11-14 inches WC for LP or 3.5-7 inches WC for natural gas (NG). Is the fuel pressure reading correctly?

NOTICE

For full instructions on checking the fuel pressure, refer to *Section 2: Engine Does Not Start, Test 7: Check Fuel Supply Pressure*.

    a. **Yes -** Go to *Check Fuel Type*.
    b. **No -** Repair or replace the fuel delivery system.

Check Fuel Type

1. Open the roof and remove the air inlet side end cap (see *Section 9: Removal and Installation* for detailed instructions if necessary).
2. Locate the fuel selector valve (A, Figure 5) on top of the fuel pressure regulator (B).

5

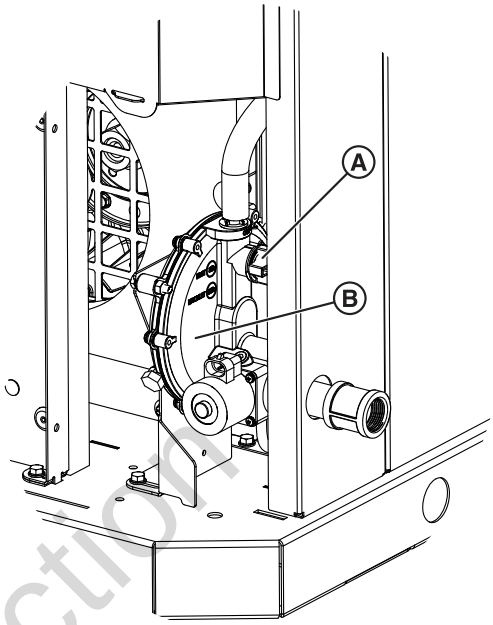

Not for Reproduction

3. Set the fuel selector.
   a. For LP, rotate the lever (A, Figure 6) on the fuel selector valve until LP is aligned with “OUT” on the fuel regulator.

6

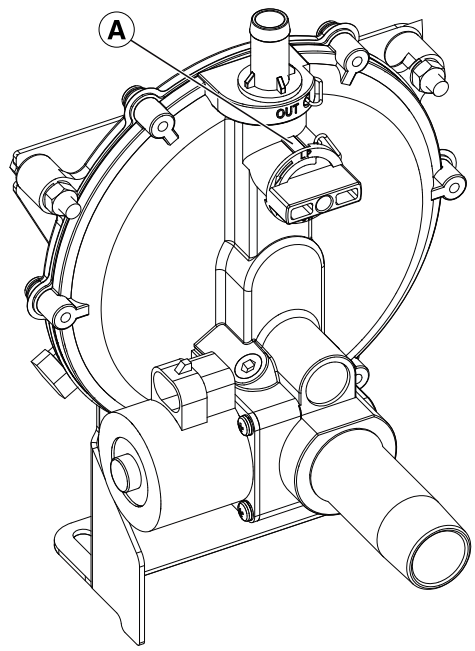

   b. For NG, rotate the lever (A, Figure 7) clockwise 90° so the handle position of the lever will be up and down and the “NG” letters will be on the left.

7

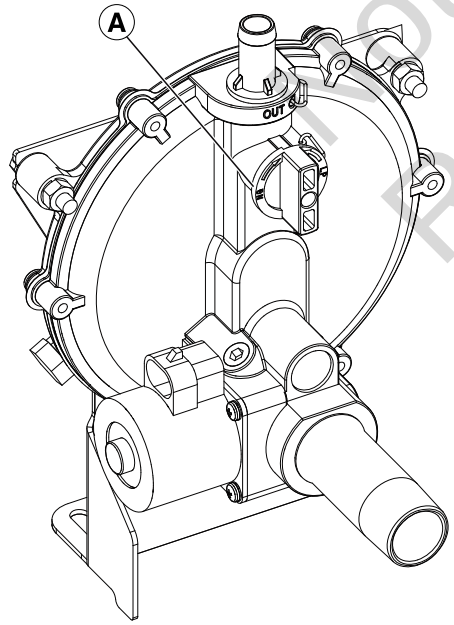

4. Locate the controller.
5. Press STOP/CONFIG to navigate to **Manual Mode**.
6. Press and hold STOP/CONFIG to access the configuration menu.
7. Press START/SELECT to enter **Write Mode** to edit the items in the configuration menu.

NOTICE

If you are changing the setup in the generator's controller from the factory setting of NG fuel to LP fuel you will need to enter the configuration menu by using the Dealer Password, which is available on the Power Portal.

8. Using the up or down arrows, navigate to "SELECT PROFILE - Configuration 12/14" and press START/SELECT. "Select Profile 1/1" will be displayed.
9. Press START/SELECT. The current generator profile will be displayed. Press START/SELECT again to edit the profile. The generator profile will start flashing.
10. Using the up or down arrows, navigate to the correct profile for the generator and press START/SELECT to confirm the selected profile. For example, choose “18KW_LP” for operating an 18kW unit running on LP fuel. The generator profile will stop flashing.

NOTICE

Selecting a profile not intended for the generator can cause the generator to run erratically and could result in damage.

11. To save the new fuel setting, press and hold STOP/CONFIG until “Saving Settings…” is displayed.
12. Using the up or down arrows, navigate to the PRODUCT INFO screen to confirm that the controller is set to the correct profile.
13. Press AUTO/MANUAL. An LED illuminates to indicate that the system is in **Auto Mode**.
14. Go to *Check Electrical Wiring and Electronics*.

Check Electrical Wiring and Electronics

1. Remove the panels necessary to access the Electrical Field Connections.
2. Inspect the following wiring and connection items on all electronics (Controller, AVR, Battery Charger, and EnergyTrak):
   a. Field Connections Printed Circuit Board (PCB) Connector.
   b. Transfer Switch Connection.
   c. Two-wire Start (Optional).
   d. E-Stop.
   e. Power Output Connector (Power L1 and L2, Neutral, and Ground connections).

NOTICE

See your generator's installation and operation manual for specific wiring details. It may be necessary to remove the control panel cover to access the wiring and connection items. Re-install the panel to operate the GC-1030 Series controller.

3. Locate the AVR and observe and record the LED sequence. Is the LED sequence on the AVR correct?
   a. **Yes -** Go to Using Linear Diagnostics.
   b. **No -** Go to step 4.

Not for Reproduction

NOTICE
For LED sequence and additional details, refer to *Smart AVR2* in *Section 8: Service Tools Software and Electronics*.

4. Locate the 15 amp ATM fuse for the controller in the fuse block, located in the engine compartment. Remove the fuse. Set the Digital Multimeter to read ohms and test for continuity. Is the fuse open?
   a. **Yes -** Replace the 15 amp ATM fuse. Test again.
   b. **No -** Go to step 5.
5. Set the Digital Multimeter to read DC volts. Connect the red meter test lead to Terminal 6 (Wire E-13M) on the fuse block and connect the black meter test lead to ground. Is the voltage equal to or greater than 9.6 VDC?
   a. **Yes -** Go to step 6.
   b. **No -** Repair or replace Wire E-13M. Test again.
6. Install the 15 amp ATM fuse for the controller.
7. Locate the AVR. Using the red meter test lead, back probe Terminal 16 (Wire 13B - Connector J2) and connect the black meter test lead to ground. Is the voltage equal to or greater than 9.6 VDC?
   a. **Yes -** Go to step 8.
   b. **No -** Inspect the wiring between the fuse block (Wire E-13K) and the AVR (Wire 13B), including bulk heads in the engine compartment and electrical area. Test again.
8. At the AVR, using the red meter test lead, back probe Terminal 5 (Wire 13D - Connector J2) and connect the black meter test lead to ground. Is the voltage equal to or greater than 9.6 VDC?
   a. **Yes -** Go to step 9.
   b. **No -** Replace the AVR. Test again.
9. Locate the controller and confirm the display is powered on. Using the red meter test lead, back probe Terminal 2 (Wire 13D - Connector E) and, using the black meter test lead, back probe Terminal 1 (Wire 0B - Connector E). Is the voltage equal to or greater than 9.6 VDC?
   a. **Yes, and the controller display is powered on -** Go to step 10.
   b. **Yes, but the controller display is off (dark) -** Replace the controller. Test again.
   c. **No -** Repair or replace the wiring between the controller and the AVR (Wire 13D and/or Wire 0B). Test again.
10. Go to *Using Linear Diagnostics*.

Not for Reproduction

Using Linear Diagnostics

This will determine the actual point at which to begin the diagnosis. Since it is possible that certain actions can have unexpected consequences, always return to “Does the engine crank?” after troubleshooting and performing any repair. Even if you are confident that a particular problem was corrected, continue to the very end of the diagnostics (*Section 5: Check Switches*) to be sure that other problems do not exist.

NOTICE

Verify that the 15 amp ATM fuse for the controller is installed in the fuse block, located in the engine compartment. Press AUTO/MANUL on the controller to enter **Manual Mode**. Press START/SELECT on the controller to crank and start the engine.

Check the Controller for Error Messages

NOTICE

Make sure the controller is powered on and the Generator Emergency Shutdown switch is set to the ON position.

1. If an alarm is present on the controller (status LED light is flashing), access the controller and record the displayed error message.
2. Make sure the controller firmware is updated to the most recent version. To access the product information display and view the existing firmware version, press the down arrow twice on the controller.
3. Clear the alarm by pressing the up and down arrows simultaneously.
4. Refer to the table below for more details on the error messages and the corresponding sections of this manual to correct the alarm.

NOTICE

With R5.00 firmware installed, the controller will store up to 150 events in an event log. To access the event log, press STOP/CONFIG to enter **Manual Mode**, press and hold STOP/CONFIG and then press STOP/CONFIG again to access Configuration in Read Mode, and then press and hold the up and down arrows simultaneously.

Not for Reproduction

Controller Alarm Messages		
Error Message	**Potential Root Cause(s)**	**Corresponding Repair Manual Section**
Alternator Input Lost	Loss of alternator output voltage is present or the controller is not recognizing the output voltage.	*Section 3: Check Generator Output Voltage*
Amb Temp (Pin 24) Ckt Open	Wire 57 (I/P: ANLG TEMP/DIG G) is not connected either on controller or relay board.	*Section 8:Service Tools Software and Electronics*
Auto Exercise Skipped	Ambient temperature is below 40 degrees Fahrenheit.	N/A
AVR-Blocked Start	AVR in an unknown state, occurring during crank cycle.	*Preliminary Checks*
AVR Communication Fail	CANbus communication lost between AVR and controller during start up.	*Check Electrical Wiring and Electronics* in *Preliminary Checks*
AVR Fault	Controller does not recognize the AVR (CANbus) or the AVR is failing.	*Section 3: Check Generator Output Voltage*
Battery Over Voltage	Voltage at controller Terminals 1 and 2 is greater than 15 VDC (shutdown alarm).	*Section 1: Engine Does Not Crank*
Battery Under Voltage (Auto Exerciser Mode)	Voltage at controller Terminals 1 and 2 is less than 10 VDC (warning alarm, during generator exercise).	*Section 1: Engine Does Not Crank*
Emergency Stop	Jumper is removed from AVR customer connections (E-Stop Terminals 9 and 10), Wire 100C is removed, obstructed, or faulty between AVR (Pin 6, connector J2) and controller (Terminal 25, IP ANLG FL/DIG G).	*Preliminary Checks*
Extended Over Load Trip	Too much load is being put on the generator (improperly sized). Discuss with homeowner what loads were added post-install (and consider power management options).	N/A
Fail to Start	The generator does not start after pressing the START/SELECT button on the controller a number of times.	*Section 1: Engine Does Not Crank*
Fail to Stop	The generator does not stop after pressing STOP/CONFIG on the controller.	*Section 6: Engine Troubleshooting*
Gross Over Speed	Engine speed exceeds 125% of the rated engine speed at the controller.	*Section 4: Check the Frequency*
High Engine Temperature Switch	Engine block exceeds around 300 degrees Fahrenheit, engine seals (for air-flow) are eroded, air flow is blocked, continuity between terminals on the switch is failing (cold engine), or Wire E-95 (Dig I/P E) is touching ground.	*Section 5: Check the Switches*
High Oil Pressure Detected Switch	Faulty oil pressure switch or the switch remains OPEN, or Wire E-85 is disconnected.	*Section 5: Check the Switches*

Controller Alarm Messages		
High Voltage Failure	Voltage generated during the auto exercise is too high. Recreate the exercise and monitor the voltage at the generator circuit breaker.	*Section 3: Check Generator Output Voltage*
Low Oil Pressure Switch	Generator unit is low on oil, no oil pressure is present, the oil filter is clogged, a bad oil psi switch is present (continuity to ground with psi present), or Wire E-85 (Dig I/P D) is touching ground.	*Section 5: Check the Switches*
Low Voltage Failure	Voltage generated during the auto exercise is too low. Recreate the exercise and monitor the voltage at the generator circuit breaker.	*Section 3: Check Generator Output Voltage*
Maintenance Due	Exceeded the maintenance alarm setpoint (either hours of generator run time or the set due date). Enter configuration to reset the maintenance alarm.	N/A
Min. Alternator Voltage Not Reached	Generator output voltage is < 60 VAC (as measured by the controller), GENSET I/P connector is disconnected at the controller, or faulty generator voltage sensing wires.	*Section 3: Check Generator Output Voltage*
Over Current	Too much load is being put on the generator (improperly sized). Discuss with homeowner what loads were added post-install (and consider power management options).	N/A
Over Frequency	Frequency exceeds 60 Hz at the line side of the circuit breaker and/or the controller.	*Section 4: Check the Frequency*
Over Load	Too much load is being put on the generator.	N/A
Over Speed	Engine speed exceeds 4,200 RPM at the controller.	*Section 4: Check the Frequency*
Power Reset Alarm	Weak battery during cranking, controller reset due to loss of power and/or a removed fuse, disconnected battery, or ATM Fuse Control removed.	*Preliminary Checks*
R/L1 Phase Over Voltage	Voltage between Terminal 30 (R - Connector H on the controller) and the L1 contact on the circuit breaker exceeds 240 VAC or the AVR firmware is incorrect.	*Section 3: Check Generator Output Voltage*
R/L1 Phase Under Voltage	Voltage between Terminal 30 (R - Connector H on the controller) and the L1 contact on the circuit breaker is below 240 VAC.	*Section 3: Check Generator Output Voltage*
Speed Sensor I/P Lost	Signal from speed sensor is not detected by the controller or the speed sensor is faulty.	*Section 1: Engine Does Not Crank*
Unbalanced Load	Generator units are rated at 50% load imbalance between phases. Imbalances between phases can be measured with an ammeter. Correct or move the breaker load(s) as necessary.	N/A
Under Frequency	Frequency is less than 60 Hz at the line side of the circuit breaker and/or the controller.	*Section 4: Check the Frequency*
Under Speed	Engine speed is less than 3,400 RPM at the controller.	*Section 4: Check the Frequency*
Y/L2 Phase Over Voltage	Voltage between Terminal 29 (Y - Connector H on the controller) and the L2 contact on the circuit breaker exceeds 240 VAC or the AVR firmware is incorrect.	*Section 3: Check Generator Output Voltage*
Y/L2 Phase Under Voltage	Voltage between Terminal 29 (Y - Connector H on the controller) and the L2 contact on the circuit breaker is below 240 VAC.	*Section 3: Check Generator Output Voltage*

AVR Diagnostic Trouble Codes (DTC)

1. If an alarm is present on the AVR (LED1 FAULT solid), access the controller and use the up and down arrows to view the DM01 screen and record the DTC messages.
2. Make sure the AVR firmware is updated to the most recent version. Access the AVR VERSION display and view the existing firmware version by pressing the up arrow on the controller when the STATUS screen is displayed.
3. Refer to the table below for more details on the DTC messages and the corresponding sections of this manual to troubleshoot further.

AVR DM1 Diagnostic Trouble Codes (DTC)				
Error Message	**SPN**	**FMI**	**Potential Root Cause(s)**	**Corresponding Repair Manual Section**
AVR-Reported Overcurrent	520192	0	System controller reports generator load ≥125% of rated current for 5 continuous seconds.	*Section 3: Check Generator Output Voltage*
Generated Voltage Mismatch	520193	1	System controller reports >120.0 VAC AND AVR measures >20.0 VAC below System controller value.	*Section 3: Check Generator Output Voltage*
Generated Frequency Mismatch	520194	1	AVR measures 0.0 Hz AND System controller reports ≥20.0 Hz.	*Section 4: Check the Frequency*
Field Flash Overcurrent	520200	0	AVR measures ≥5.00 A on Field Flashing circuit.	*Section 3: Check Generator Output Voltage*
Fuel/Starter Overcurrent	520201	0	AVR measures ≥2.44 A on Fuel Solenoid/Starter Relay circuit.	*Section 1: Engine Does Not Crank*

Not for Reproduction

AVR DM1 Diagnostic Trouble Codes (DTC)				
Clean Power Overcurrent	520202	0	AVR measures ≥2.44 A on Clean Power circuit.	*Preliminary Checks*
DPE Fuse Blown (F1)	520203	1	AVR measures generator frequency ≥35.0 Hz AND AVR measures DPE voltage <50.0 VAC.	*Section 3: Check Generator Output Voltage*
L2 Charger Fuse Blown (F2)	520204	17	(System controller measures utility >90.0 VAC OR generator >90.0 VAC) AND AVR measures L2 charger <50.0 VAC.	*Section 1: Engine Does Not Crank*
L1 Charger Fuse Blown (F3)	520205	17	(System controller measures utility >90.0 VAC OR generator >90.0 VAC) AND AVR measures L1 charger <50.0 VAC.	*Section 1: Engine Does Not Crank*
12V AVR (Internal)	6050	0	Internal components on AVR draw >1A.	*Section 6: Engine Troubleshooting*
12V Customer	6049	0	Customer Connection 12V output current >1A.	*Section 4: Check the Frequency*
12V IOT	6048	0	IoT Connctor 12V output current >1A.	*Section 5: Check the Switches*
12V GCU	6055	0	Controllers 12V output current >1A.	N/A

Continue to *Linear Diagnostics* and start from step 1.

NOTICE

To properly diagnose faults and make corrections to your generator unit, it is crucial to start at step 1, *Does the engine crank?* in *Linear Diagnostics*, even if the *Controller Alarm Messages* table directs you to a later section in this repair manual.

Linear Diagnostics

After inspecting and clearing any controller faults, proceed as follows:

1. Does the engine crank?

   Yes - Go to step 2.

   No - Go to *Section 1: Engine Does Not Crank*.
2. Does the engine start?

   Yes - Go to step 3.

   No - Go to *Section 2: Engine Does Not Start*.
3. Is proper voltage present?

   Yes - Go to step 4.

   No - Go to *Section 3: Check Generator Output Voltage*.
4. Is proper frequency present?

   Yes - Go to step 5.

   No - Go to *Section 4: Check the Frequency*.
5. Is a Low Oil Pressure or High Engine Temperature condition present?

   Yes - Go to *Section 5: Check the Switches*.

   No - Go to *Section 7: Final Checks*.

NOTICE

For engine troubleshooting tests, go to *Section 6: Engine Troubleshooting*.

Not for Reproduction

Specialty Tools

The following specialty tools are necessary:

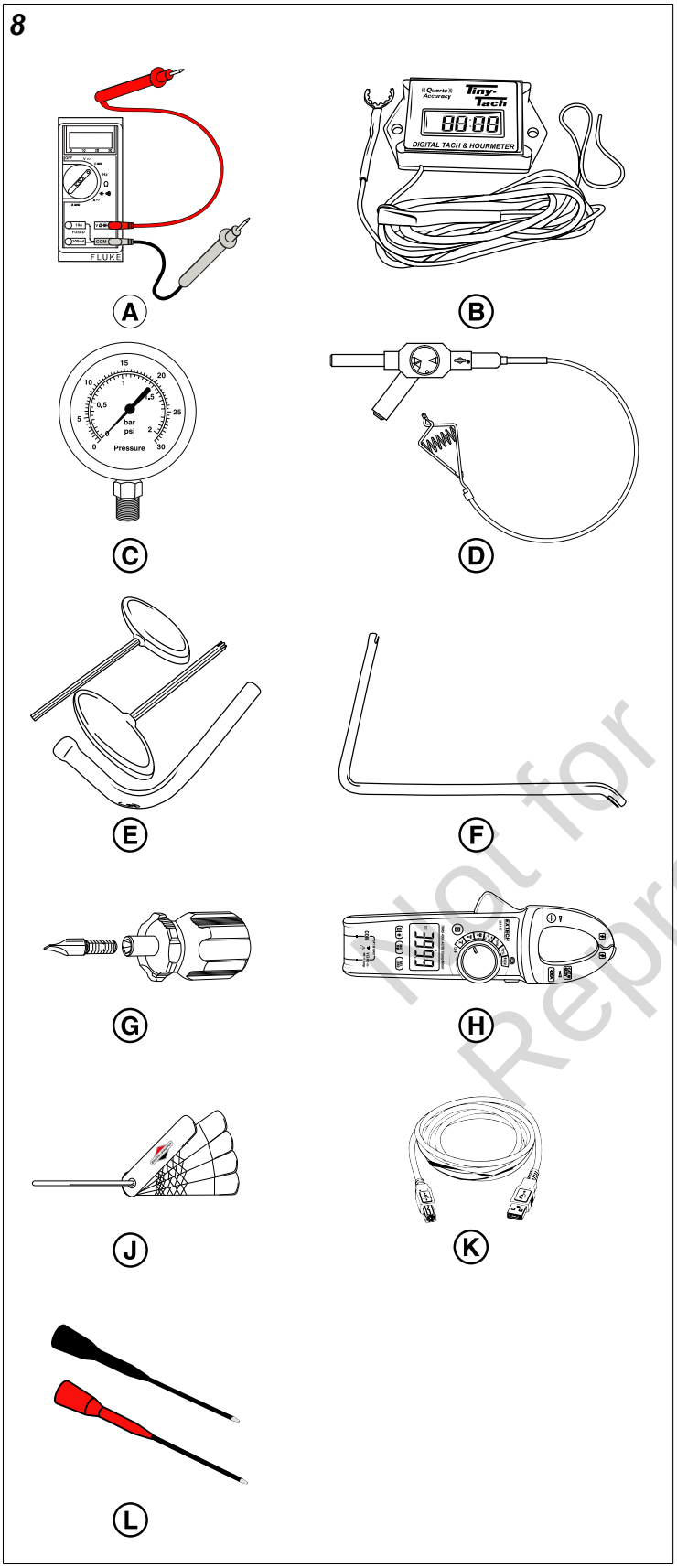

- (A) Digital Multimeter
- (B) Briggs & Stratton Digital Tachometer and Hour Meter (Part No. 19598)
- (C) Analog Manometer
- (D) Briggs & Stratton Ignition Tester (Part No. 19368)
- (E) Briggs & Stratton Valve Adjustment Set (Part No. 19465) or equivalent set of 13mm offset box end wrench, T40 T-handle Torx wrench, and 5mm T-handle Allen wrench
- (F) Briggs & Stratton Tang Adjusting Tool (Part No. 19480)
- (G) Briggs & Stratton Jet Screwdriver Set (Part No. 19570)
- (H) Briggs & Stratton Digital Volt/Ohm Meter with Amp Clamp (Part No. 19602)
- (J) Briggs & Stratton 4-Blade Feeler Gauge Tool (Part No. 19638) or equivalent basic feeler gauge set
- (K) USB-A to USB-B cable
- (L) Digital Multimeter "Fine Point Extended Needle" Test Leads

Not for Reproduction

Section 1: Engine Does Not Crank 1

Section 2: Engine Does Not Start 2

Section 3: Check Generator Output Voltage 3

Section 4: Check the Frequency 4

Section 5: Check the Switches 5

Section 6: Engine Troubleshooting 6

Section 7: Final Checks 7

Section 8: Service Tools Software and Electronics 8

Section 9: Removal and Installation 9

Section 10: Wiring Diagrams 10

Section 11: Notes 11

Not for Reproduction

This page is intentionally left blank.

Not for Reproduction

Section 1: Engine Does Not Crank

NOTICE
Whenever "Test again" appears, install the 15 amp ATM fuse for the controller in the fuse block, located in the engine compartment, if removed. From **Manual Mode** (Engine Off-Ready), press START/SELECT on the controller to check if the engine cranks. If the test fails, remove the 15 amp fuse and proceed to the next step. If the test passes, advance to *Section 2: Engine Does Not Start*.

1. Press START/SELECT on the controller. Does the engine crank?
   a. **Yes -** Go to *Section 2: Engine Does Not Start*.
   b. **No -** Go to *Test 1: Check Battery Voltage Supply*.

WARNINGS ---------- 16
TEST 1: CHECK BATTERY VOLTAGE SUPPLY ---------- 17
TEST 2: CHECK UTILITY VOLTAGE INPUT ---------- 19
TEST 3: CHECK TRICKLE CHARGE AT THE BATTERY ---------- 20
TEST 4: CHECK STARTER RELAY SIGNAL ---------- 23
TEST 5: CHECK STARTER SOLENOID CONNECTION ---------- 23
TEST 6: CHECK CONTROLLER OUTPUT ---------- 25

Not for Reproduction

Warnings

WARNING 

Generator and utility voltage could cause electrical shock or burn resulting in death or serious injury.

- Installation must be performed by a licensed professional.
- Disconnect all sources of electricity before installing or servicing equipment.
- Ground system before applying power.

WARNING 

Battery electrolyte fluid contains acid and is extremely caustic. Contact with battery contents could cause severe chemical burns.

- DO NOT open or mutilate the battery.
- Wear protective goggles, rubber apron, rubber boots and rubber gloves.
- Immediately wash electrolyte from skin with water.
- If electrolyte contacts eyes, immediately flush with water and seek medical attention.
- Spilled electrolyte is to be washed down with an acid neutralizing agent.
- A common practice is to use a solution of one pound (500 grams) bicarbonate of soda to one gallon (4 liters) of water. The bicarbonate of soda solution is to be added until the evidence of reaction (foaming) has ceased. The resulting liquid is to be flushed with water and the area dried.

WARNING 

Storage batteries give off explosive hydrogen gas during recharging. Slightest spark could ignite hydrogen and cause explosion, resulting in death or serious injury.

- DO NOT dispose of battery in a fire. Recycle battery.
- DO NOT allow any open flame, spark, heat, or lit cigarette during and for several minutes after charging a battery.
- Discharge static electricity from body before touching batteries by first touching a grounded metal surface.

WARNING 

Propane and Natural Gas are extremely flammable and explosive, which could cause burns, fire or explosion resulting in death or serious injury.

- LP gas is heavier than air and will settle in low areas.
- Natural gas is lighter than air and will collect in high areas.
- The slightest spark could ignite these fuels and cause an explosion.
- DO NOT allow any open flame, spark, heat, or lit cigarette.

WARNING 

Rotating parts could entangle hands, hair, clothing, or accessories resulting in death or serious injury.

- NEVER operate generator without protective housings, covers, or guards in place.
- DO NOT wear loose clothing, jewelry or anything that could be caught in rotating parts.
- Before servicing, stop the generator and disconnect the negative (-) cable at the battery.

WARNING 

Contact with muffler area could cause burns resulting in serious injury.

- DO NOT touch hot parts and AVOID hot exhaust gases.
- Allow equipment to cool before touching.

WARNING 

With the battery connected, the generator could crank and start without warning resulting in death or serious injury.

- Before servicing, stop the generator and disconnect the negative (-) cable at the battery.

Not for Reproduction

Test 1: Check Battery Voltage Supply

NOTICE

Perform the steps in the *Check Battery Size and Type* and *Check Battery Connection and Polarity* sections in *Preliminary Checks* before continuing.

1. Press STOP/CONFIG on the controller to enter **Manual Mode**.
2. Inspect the battery for damage, correct installation, and maintenance.
   a. Check the battery posts for melting or damage caused by over-tightening.
   b. Inspect the battery for discoloration, a raised top, or a warped or distorted case, which indicates that it has been frozen, overheated, or overcharged.
   c. Inspect the battery case for leaks or cracks.
   d. Inspect the cable clamps and battery terminals for oxidation or corrosion.
   e. Inspect battery screws, clamps, and cables for breakage and loose connections.
   f. Inspect the battery fluid level of unsealed batteries. If the fluid level is low, fill with distilled water only.
   g. Do any of the above conditions exist?
      1. **Yes -** Repair or replace any defective components and/or cabling. Clean cable clamps and battery terminals using a wire brush or sandpaper to remove oxidation or corrosion. See your generator's installation and operation manual for the correct battery type and replacement size. Go to step 3.

NOTICE

Before servicing any battery components, set the Generator Emergency Shutdown switch to the OFF position, remove the 15 amp ATM fuses for the controller and battery charger in the fuse block, located in the engine compartment.

      2. **No -** Go to step 3.
3. Set the Generator Emergency Shutdown switch to the OFF position.
4. If still installed, locate and remove the 15 amp ATM fuse for the controller in the fuse block, located in the engine compartment.
5. If still enabled, disable the battery charger by locating and removing the 15 amp ATM fuse for the battery charger in the fuse block, located in the engine compartment.
6. Disconnect the battery (A, Figure 9), and check the battery state of charge. Set the Digital Multimeter (B) to read DC volts. Place the red meter test lead (C) on the positive battery (+) post (D), and the black meter test lead (E) on the negative battery (-) post (F). Is the voltage less than 10 VDC, between 10-12 VDC, or 12 VDC or higher?
   a. **10 VDC or lower -** Obtain a new battery. See the installation manual for proper battery type and replacement size. Go to step 8.
   b. **10-12 VDC -** Fully charge the battery. Go to step 7.
   c. **12 VDC or higher -** Go to step 7.

9

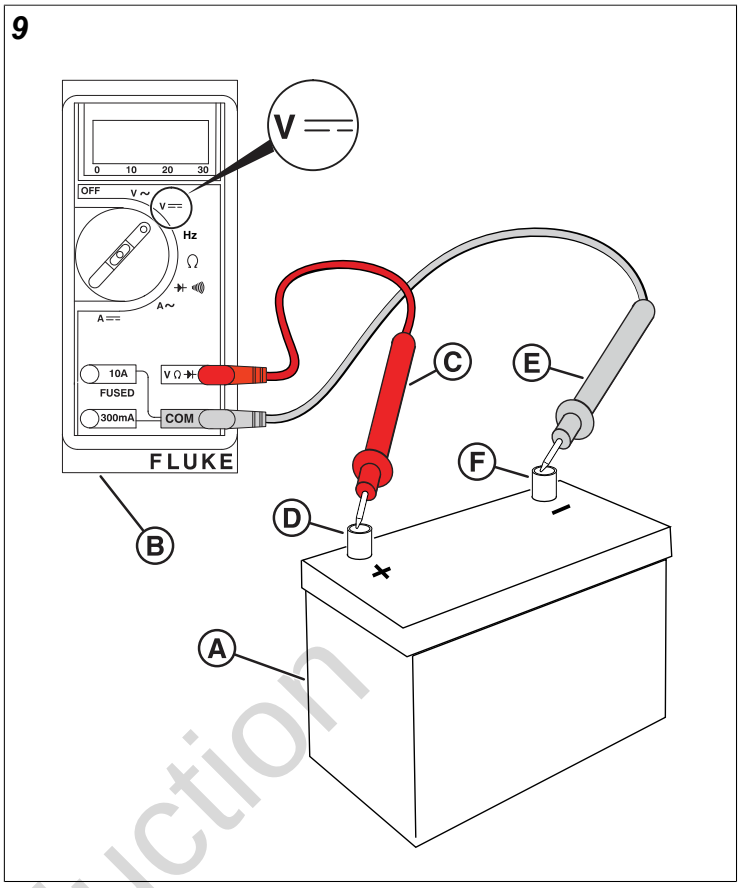

7. Use an approved battery load tester to load test the battery. Does the battery pass the load test?
   a. **Yes -** Proceed as follows:
      1. If testing the original (used) battery, go to step 8.
      2. If testing a new battery, go to *Test 2: Check Utility Voltage Input*.
   b. **No -** Obtain a new battery. See installation manual for proper battery type and replacement size. Repeat step 7.

NOTICE

If you do not have an approved battery load tester, refer to the *Battery Load Test* section in the engine's repair manual for instructions on performing a battery load test without the battery load test tool.

8. Connect the battery cables.
9. Re-install the 15 amp ATM fuse for the controller in the fuse block, located in the engine compartment.
10. Enable the battery charger by re-installing the 15 amp ATM fuse for the battery charger in the fuse block, located in the engine compartment.
11. Remove the control panel and flip the panel over to access the back of the controller.

Not for Reproduction

12. Back probe the socket terminals of Terminal 1 (-) and Terminal 2 (+) (A, Figure 10) on the controller to measure DC voltage. Is the voltage at approximately 13.5 VDC with the charger on or more than 9.6 VDC without the charger on?

    a. **Yes -** Go to *Test 4: Check Starter Relay Signal*.

    b. **No -** Go to step 13.

NOTICE

Meter reading in steps 12 and 13 verify that utility voltage is present.

WARNING

Even if the terminals of Terminal 1 (-) and Terminal 2 (+) are back-probed as instructed, avoid touching both terminals simultaneously. Do not remove socket terminals and probe the pins directly, because touching both pins with the same probe will result in arcing between terminals. Any arcing can damage controller components and wires, and cause eye injuries if safety glasses are not worn.

WARNING

Fuel and fuel vapors can be ignited, causing explosion, which could result in death or serious injury.

10

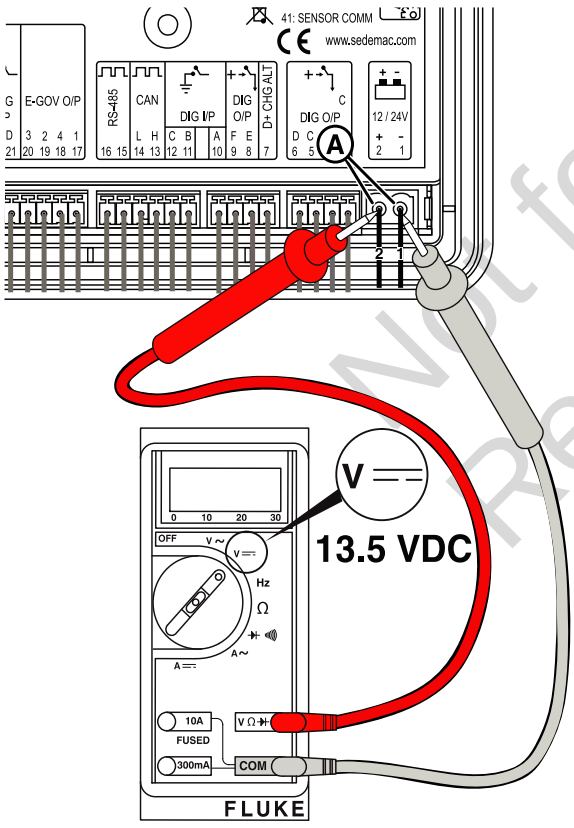

13. With the 2-pin connector plugged into the controller, measure DC voltage from Terminal 2 (A, Figure 11) to the negative battery (-) post (B). Is the voltage at approximately 13.5 VDC with the charger on or more than 9.6 VDC without the charger on?

    a. **Yes -** Go to step 15.

    b. **No -** Go to step 14.

11

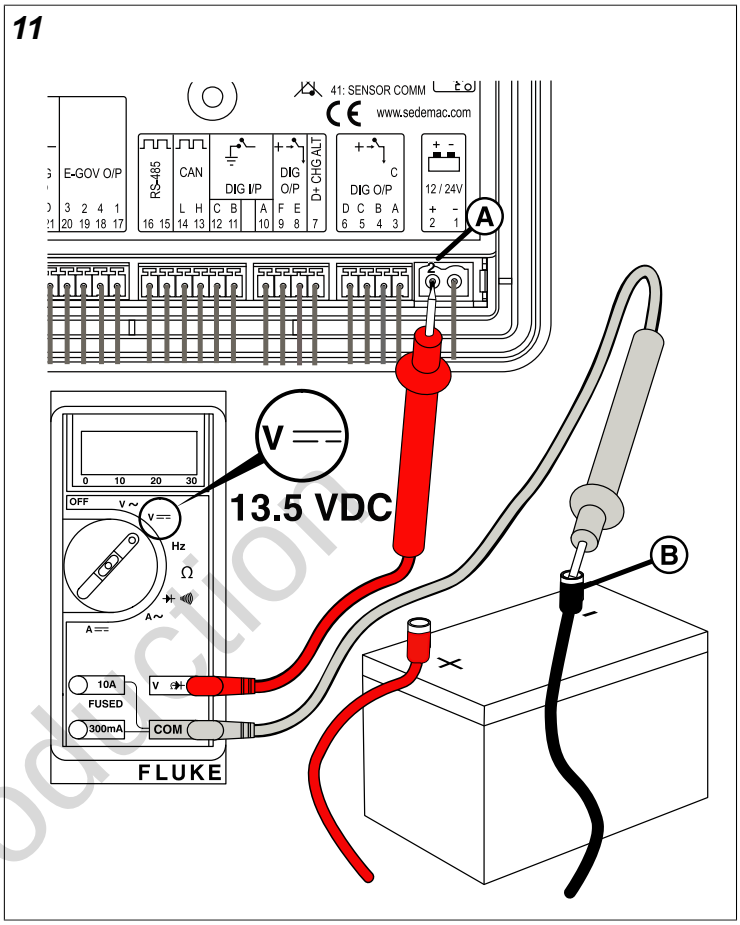

14. Inspect all wiring and connections on the controller. Look for wires that are damaged (nicked, kinked, cut, abraded, burnt, broken, etc.), loose, or disconnected. Do any of these conditions exist?

    a. **Yes -** Repair or replace as necessary. Test again.

    b. **No -** Return to step 8.

15. Inspect the condition of all wires, cables, and connectors in the unit. Pay particular attention to ground posts and frame grounds. Look for wires that are damaged (nicked, kinked, cut, burnt, broken, etc.), loose, or disconnected. Do any of these conditions exist?

    a. **Yes -** Replace or repair as necessary. Test again.

    b. **No -** Set the Generator Emergency Shutdown switch to the ON position and go to *Test 4: Check Starter Relay Signal*.

Not for Reproduction

Test 2: Check Utility Voltage Input

1. Connect the battery and install the 15 amp ATM fuse in the fuse block (if removed) and set the Generator Emergency Shutdown switch to the ON position (if currently in the OFF position).
2. Set the Digital Multimeter (A, Figure 12) to read AC volts. Measure AC voltage at the customer connections (UTILITY 25 and 26) on the AVR (B). Is approximately 240 VAC present?
   a. **Yes -** Go to *Test 3: Check Trickle Charge at the Battery*.
   b. **No -** Go to step 3.

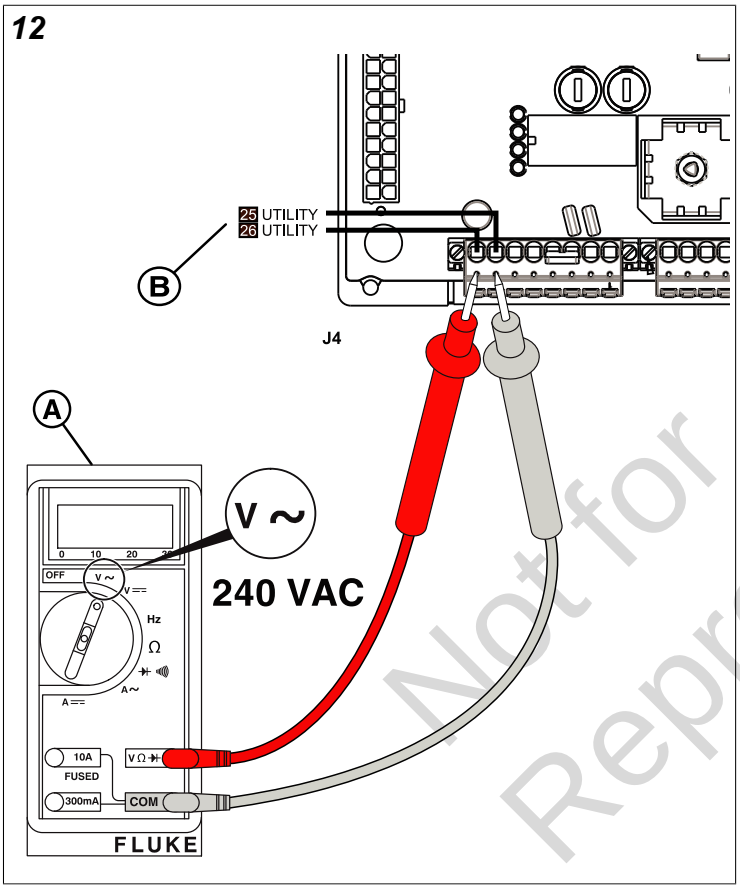

3. Measure AC voltage on the bottom side of the two transfer switch fuses (A, Figure 13). Is approximately 240 VAC present?
   a. **Yes -** Repair or replace the wiring between the transfer switch and generator. Test again.
   b. **No -** Go to step 4.

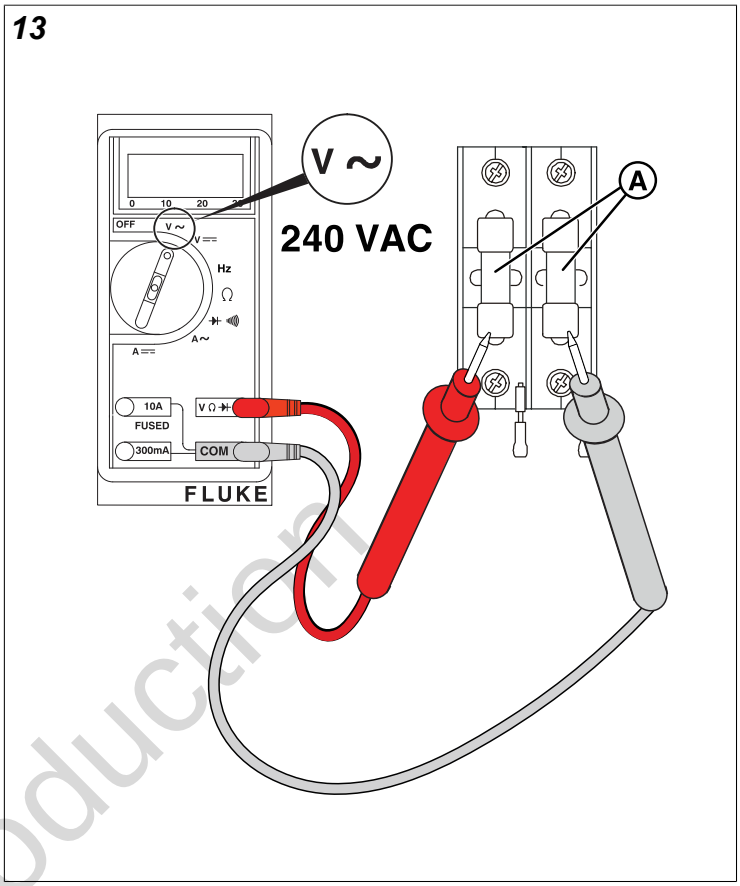

Not for Reproduction

4. Measure AC voltage on the top side of the two transfer switch fuses (A, Figure 14). Is approximately 240 VAC present?

   a. **Yes -** Remove the fuses and test for continuity (B). Replace the open fuse(s). Test again.

NOTICE

Before replacing the fuses, turn off utility power and remove the fuses from the fuse holder and verify that no continuity to ground is present. If continuity to ground is present, check for wire shorts or a failed battery charger, warmer, or controller.

   b. **No -** Repair or replace transfer switch wiring. Test again.

Test 3: Check Trickle Charge at the Battery

NOTICE

If a new battery is installed during a utility outage, the charging circuit must be tested after restoration of utility power.

1. Set the Digital Multimeter (A, Figure 15) to read AC volts. Back probe pins L1 and L2 on the battery charger (Wires 16 and 17) (B). Is approximately 240 VAC present?

   a. **Yes -** Go to step 8.

   b. **No -** Go to step 2.

14

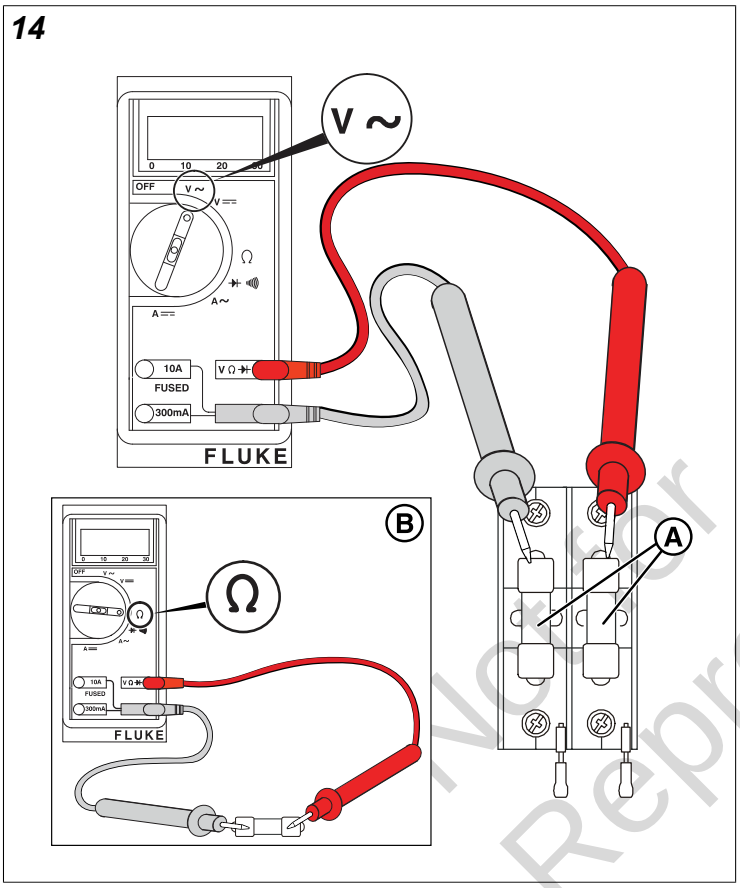

15

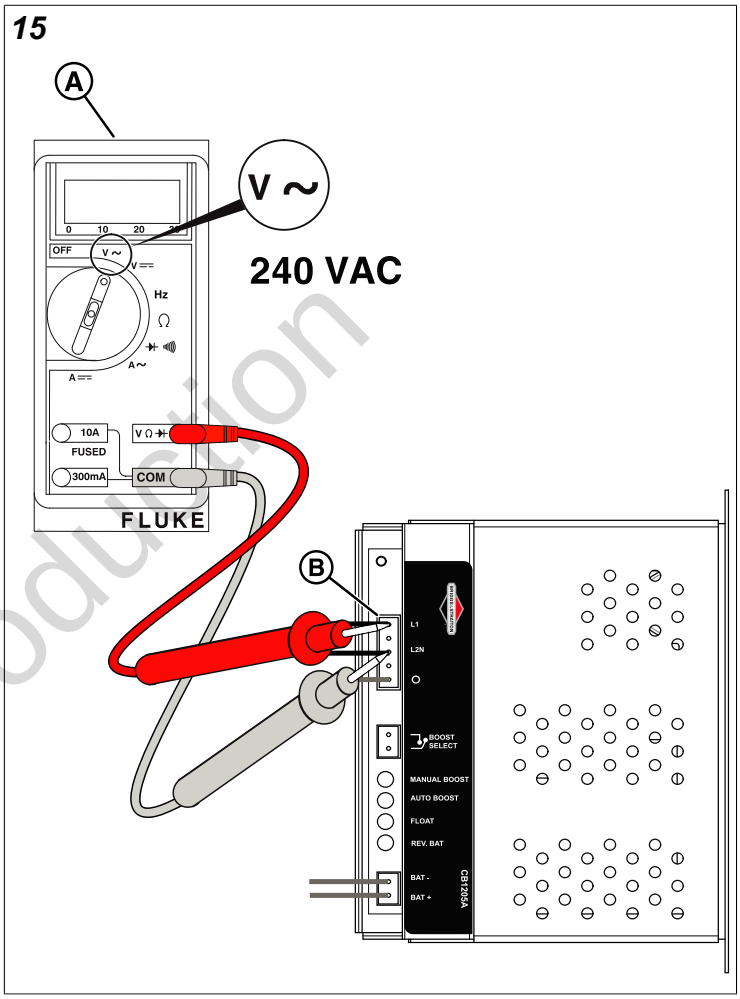

Not for Reproduction

2. Attach the "Fine Point Extended Needle" test leads and, at the AVR, back probe Terminal 4 (Wire 16 - Connector J6) (A, Figure 16) with one meter test lead (B) and back probe Terminal 9 (Wire 17 - Connector J6) (C) with the other meter test lead (D). Is approximately 240 VAC present?
   a. **Yes -** Repair or replace the wiring between the AVR and the battery charger.
   b. **No -** Go to step 3.

16

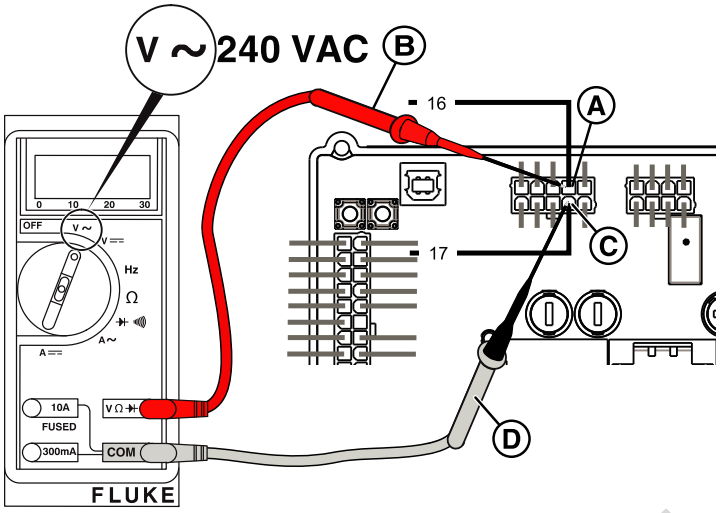

3. Remove the F3 and F4 fuses from the AVR and verify fuse continuity (A, Figure 17). Is continuity present at both fuses?
   a. **Yes -** Replace the AVR. Test again.
   b. **No -** Go to step 4.

17

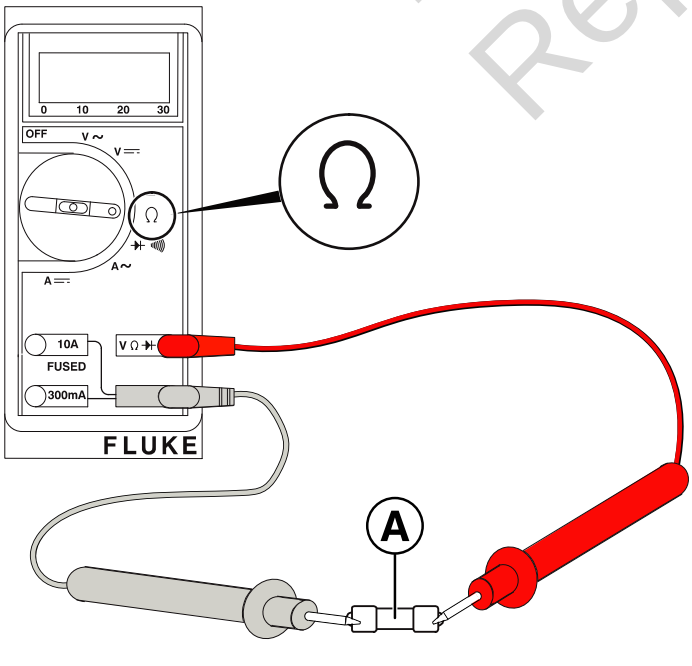

4. Remove Wire Connector J6 from the AVR and then replace the F3 and F4 fuses.
5. Test for continuity on the removed J6 connector by connecting one meter test lead (A, Figure 18) to Terminal 4 (Wire 16 - Connector J6) or Terminal 9 (Wire 17 - Connector J6) (B) and connecting the other meter test lead (C) to ground (D). Is continuity present?
   a. **Yes -** Go to step 6.
   b. **No -** At the AVR, replace the fuse(s) and reconnect Wire Connector J6. Test again.

18

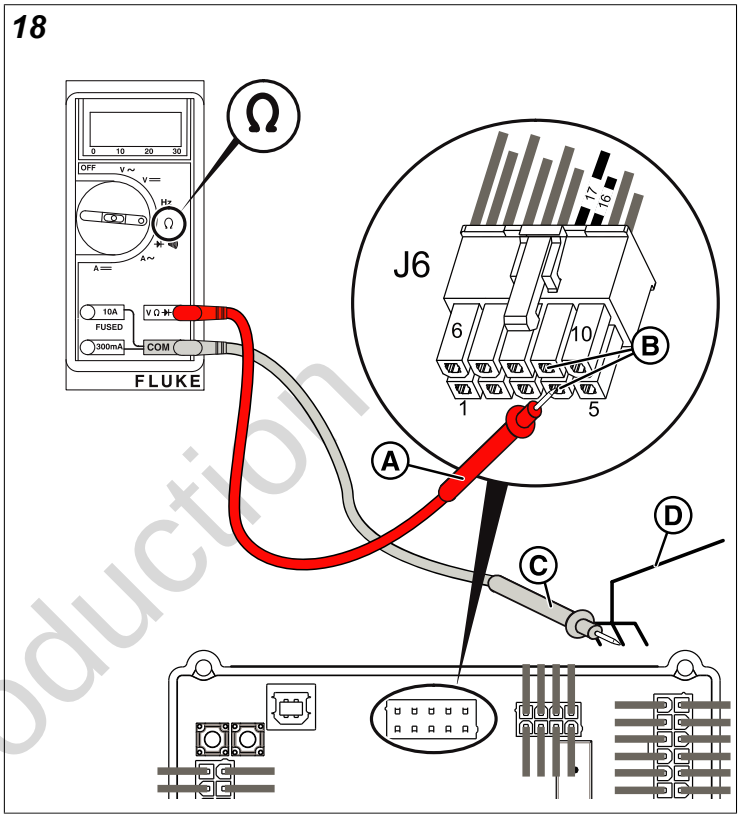

Not for Reproduction

6. Unplug Wire Connector J1 from the battery charger. Test for continuity on pins L1 and L2 (Pins 4 and 9, Wires 16 and 17 - Connector J1 on the battery charger) (A, Figure 19) to ground (B). Is continuity present?

   a. **Yes -** Repair or replace the wiring between the AVR and battery charger.

   b. **No -** At the AVR, reconnect Wire Connector J6. Replace the battery charger. Test again.

19

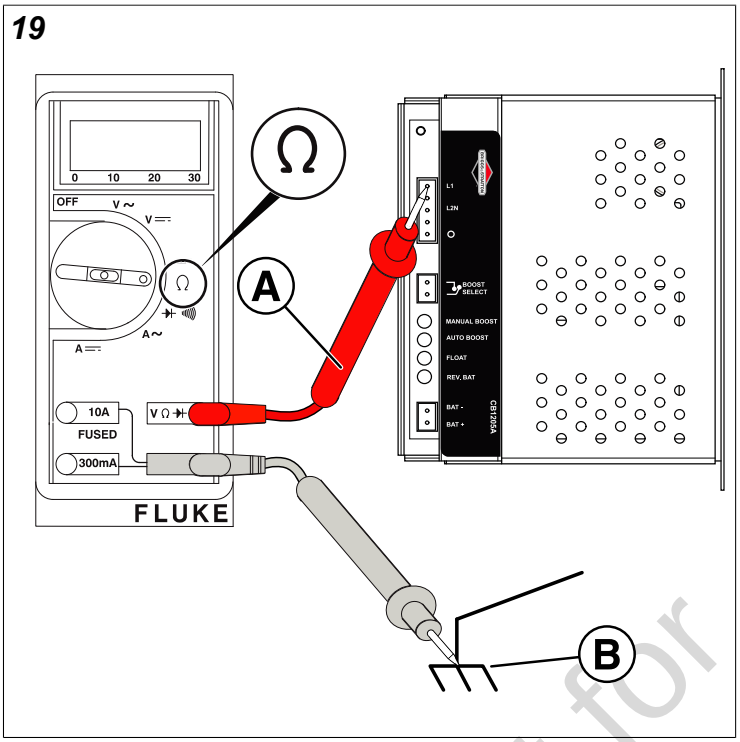

7. Make sure the battery cables are connected to the battery posts. Set the Digital Multimeter (A, Figure 20) to read DC volts. Connect the red meter test lead (B) to the positive battery charger output (BAT +, Wire 13C) (C) and the black meter test lead (D) to the negative battery charger output (BAT -, Wire 0J) (E). Measure DC voltage across the pins with the connector plugged in. Is the voltage equal to or greater than 13.0 VDC?

   a. **Yes -** Go to step 8.

   b. **No -** Replace the battery charger. Confirm the LEDs (AUTO BOOST or FLOAT) are illuminated on the battery charger. Test again.

20

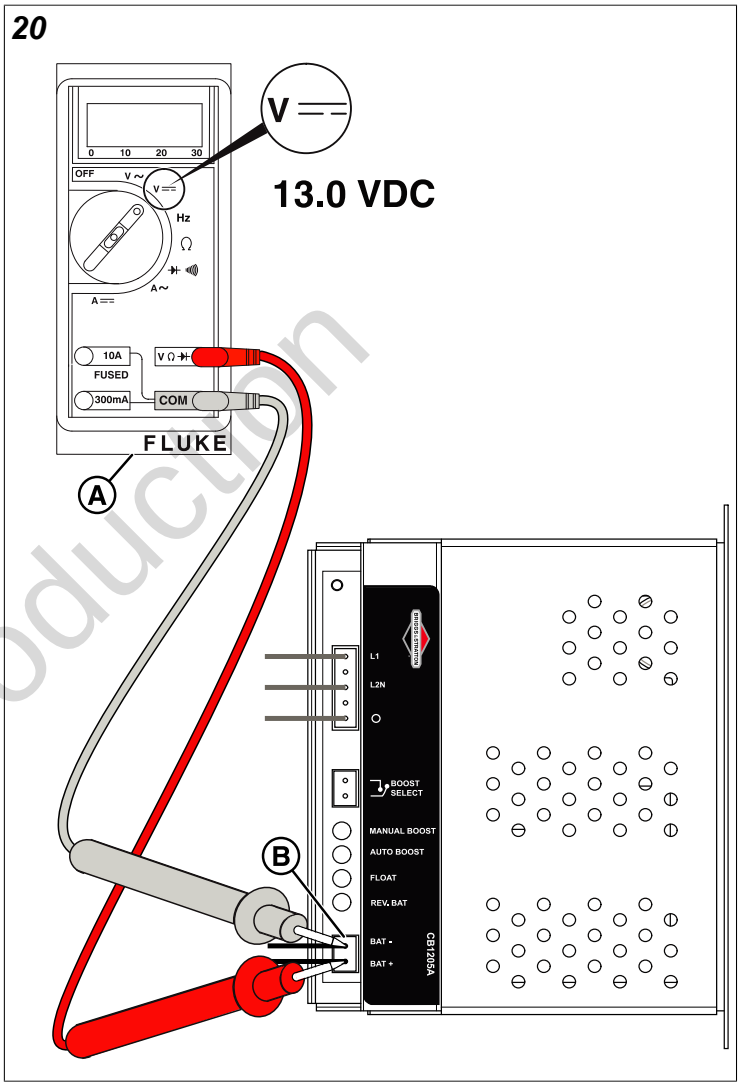

Not for Reproduction

8. Connect the Digital Multimeter (A, Figure 21) to the battery (B) by placing the red meter test lead (C) on the positive battery (+) post (D) and the black meter test lead (E) on the negative battery (-) post (F). Measure DC voltage across the battery terminals. Is voltage equal to or greater than 13.0 VDC?

   a. **Yes -** Go to *Test 4: Check Starter Relay Signal*.

   b. **No -** Go to step 9.

21

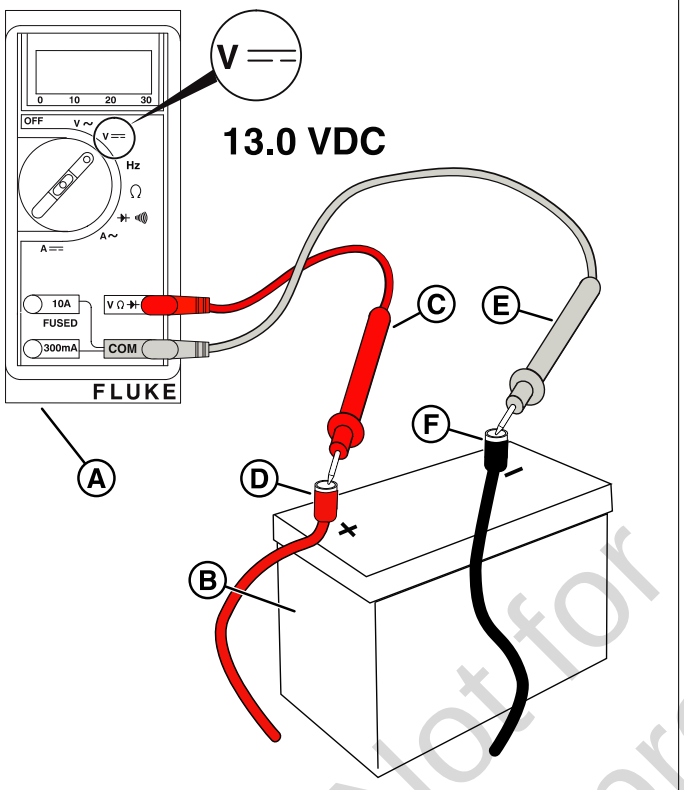

9. Locate the 15 amp ATM fuse for the battery charger in the fuse block, located in the engine compartment. Remove the fuse and test for continuity (A, Figure 22). Is the fuse open?

   a. **Yes -** Replace the fuse. Repeat step 8.

NOTICE

Before replacing the fuse, inspect the wiring between the battery and battery charger. Repair or replace wiring as necessary.

   b. **No -** Go to *Test 1: Check Battery Voltage Supply* to confirm the battery voltage is greater than 9.6 VDC.

22

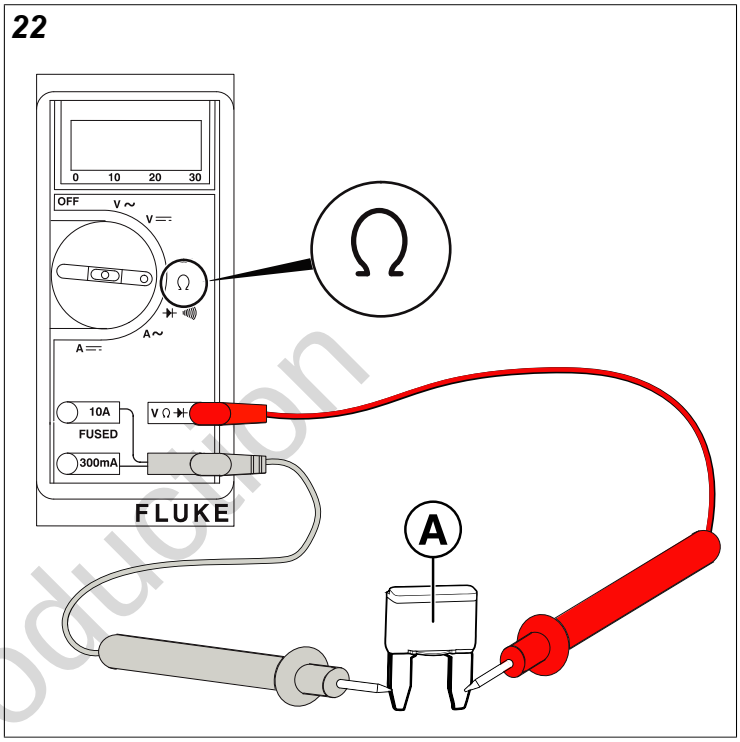

Test 4: Check Starter Relay Signal

1. Go to *Test 5: Check Starter Solenoid Connection* to check the starter relay signal on PowerProtect+ 18-26kW units.

Test 5: Check Starter Solenoid Connection

NOTICE

Before doing this test, make sure you have completed the steps in Test 1: Check Battery Voltage Supply to confirm that you have a good battery.

Not for Reproduction

1. Set the Digital Multimeter (A, Figure 23) to read DC Volts. Connect the red meter test lead (B) to the post of the starter solenoid (Wire 13Y) (C) and connect the black meter test lead (D) to ground (E). Is the battery voltage from Wire 13Y equal to or greater than 9.6 VDC?
   a. **Yes -** Go to step 2.
   b. **No -** Repair or replace the wiring and/or connections between the battery and the starter. Test again.

23

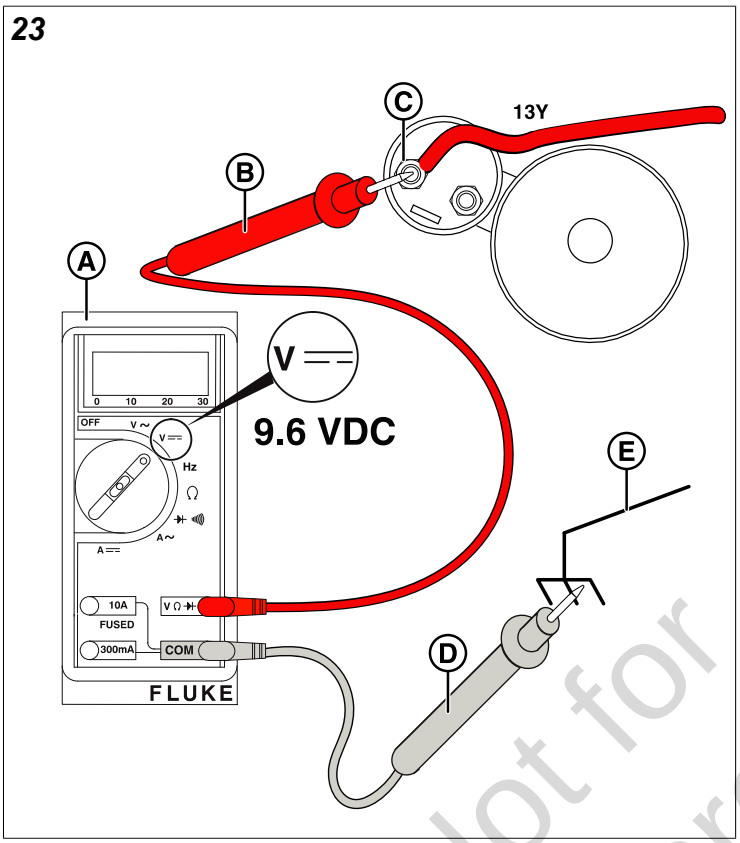

2. Disconnect the control wire E-56C (A, Figure 24) from the spade contact at the starter solenoid (B). Connect the positive (+) meter test lead (C) to the control wire (A), and connect the negative (-) meter test lead (D) to ground (E).

24

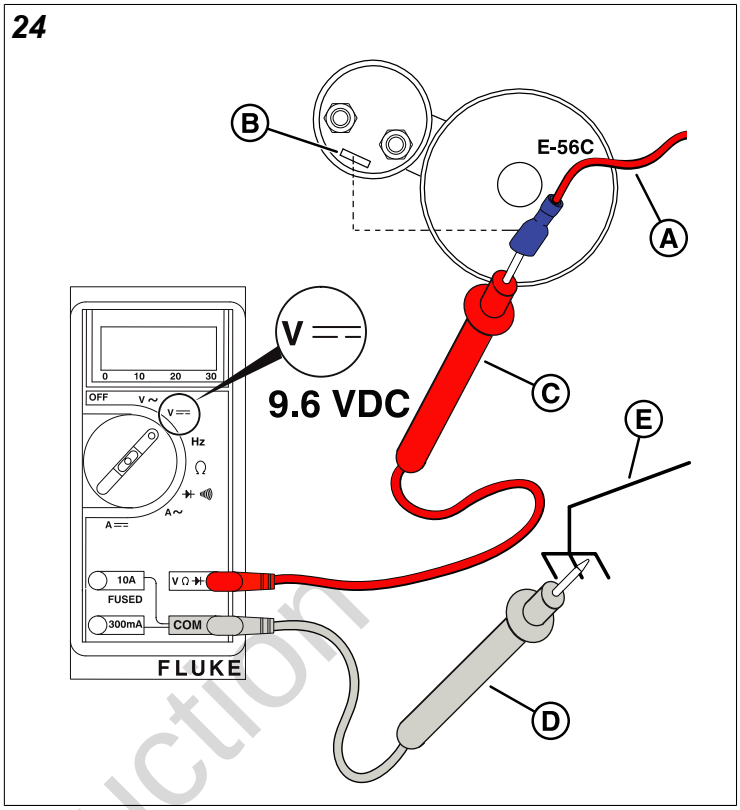

3. Install a 15 amp ATM fuse for the controller in the fuse block.
4. Set the Generator Emergency Shutdown Switch to the ON position.
5. Press START/SELECT on the controller to crank the engine.
6. Is DC voltage on the control wire at the starter solenoid equal to or greater than 9.6 VDC?
   a. **Yes -** Check that the engine spins freely and is not locked up. If the engine spins freely, install a new starter. Test again.
   b. **No -** Go to *Test 6: Check Controller Output*.

Not for Reproduction

Test 6: Check Controller Output

1. With wire connectors connected to the controller, back probe Terminal 4 (Dig OP B, Wire 56A) (A, Figure 25) with the positive (+) meter test lead (B). Connect the negative (-) meter test lead (C) to Terminal 1 (Wire 0B) (D).

25

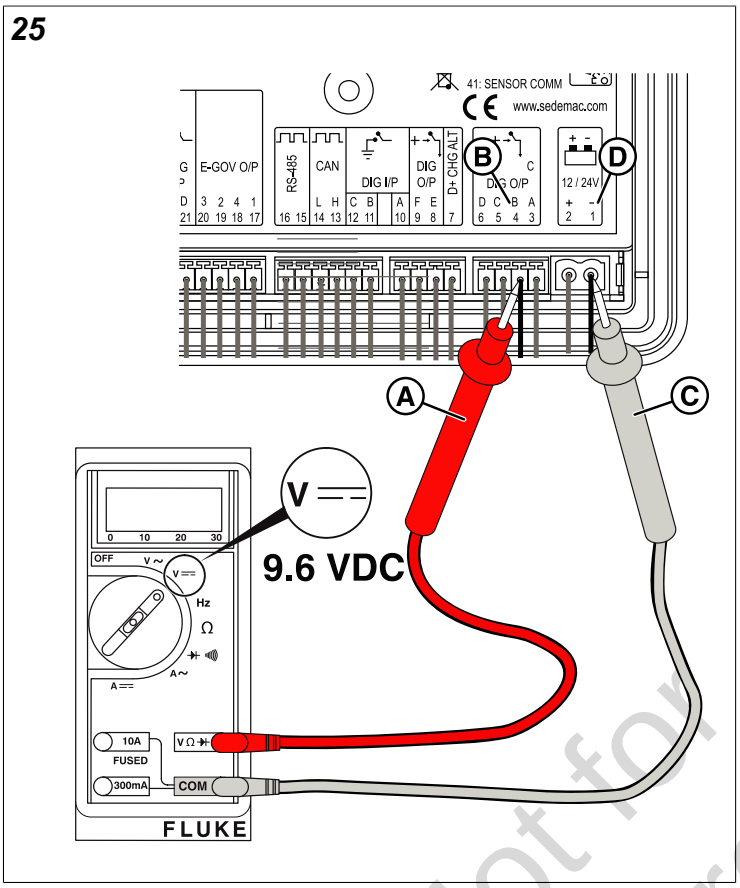

2. Install a 15 amp ATM fuse for the controller in the fuse block.
3. Set the Generator Emergency Shutdown switch to the ON position.
4. Press START/SELECT on the controller to crank the engine.
5. Is DC voltage on Terminal 1 and Terminal 4 equal to or greater than 9.6 VDC?
   a. **Yes -** Go to step 6 to measure the voltage into and out of the AVR.
   b. **No - Less than 9.6 VDC**. Less than 9.6 VDC. Go to *Test 1: Check Battery Voltage Supply*.
   c. **No - No voltage**. Install a new controller. Test again.
6. Attach the "Fine Point Extended Needle" test leads and, at the AVR, back probe Terminal 17 (Wire 56A - Connector J2) (A, Figure 26) with the red meter test lead (B) and connect the other meter test lead (C) to ground (D). Is the DC voltage equal to or greater than 9.6 VDC?
   a. **Yes -** Go to step 7.
   b. **No -** Repair or replace Wire 56A between the AVR (Terminal 17 - Connector J2) and the controller. Test again.

26

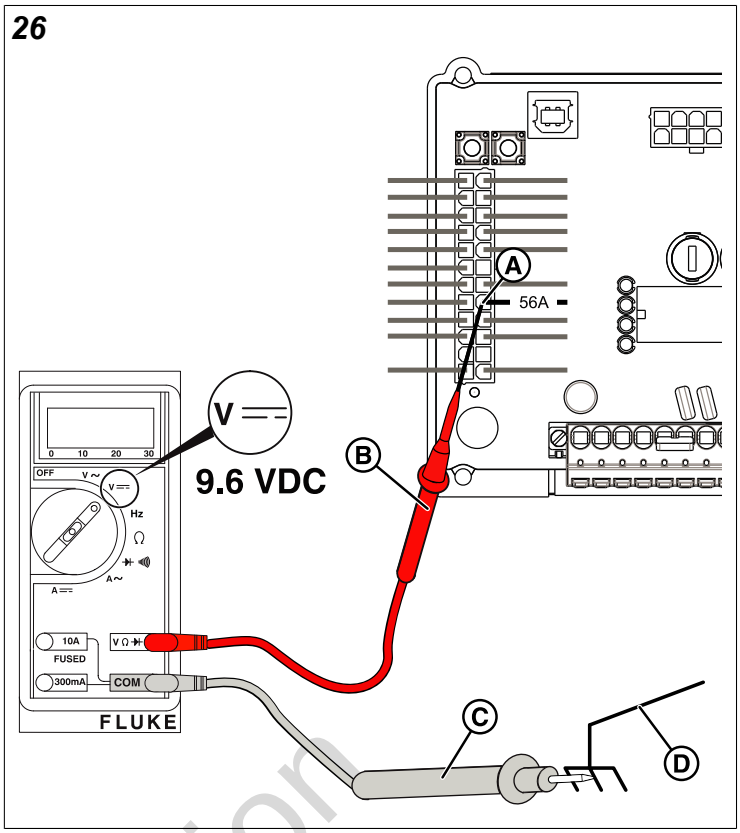

7. Back probe Terminal 15 (Wire 56B - Connector J2) (A, Figure 27) on the AVR with the red meter test lead (B) and connect the other meter test lead (C) to ground (D). Is the DC voltage equal to or greater than 9.6 VDC?
   a. **Yes -** Go to step 8.
   b. **No -** Replace the AVR. Test again.

27

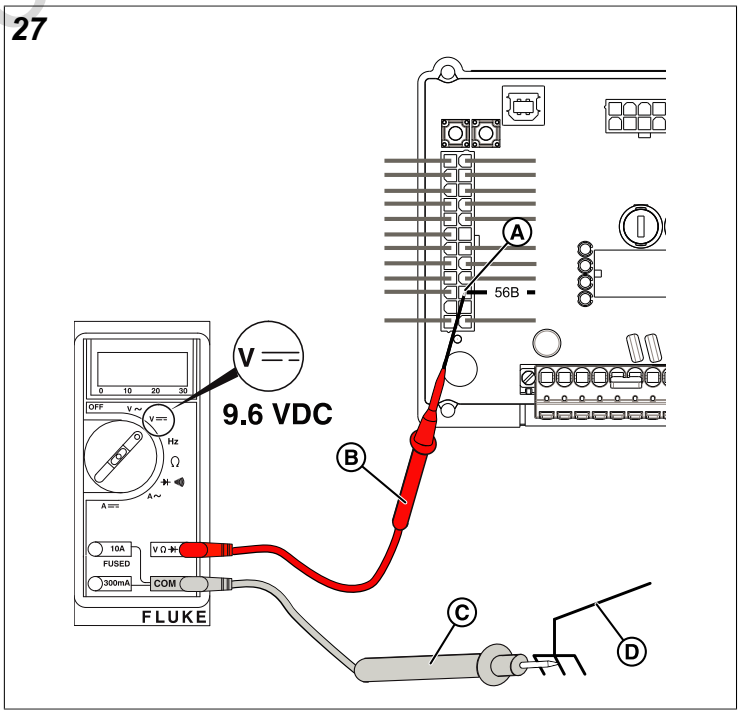

Not for Reproduction

8. Locate and remove the starter relay in the fuse block, located in the engine compartment (A, Figure 28). Set the Digital Multimeter (B) to read DC volts. Connect the red meter test lead (C) to Terminal 7 of the relay base (Pin 86) (D) and connect the black meter test lead (E) to ground (F).

28

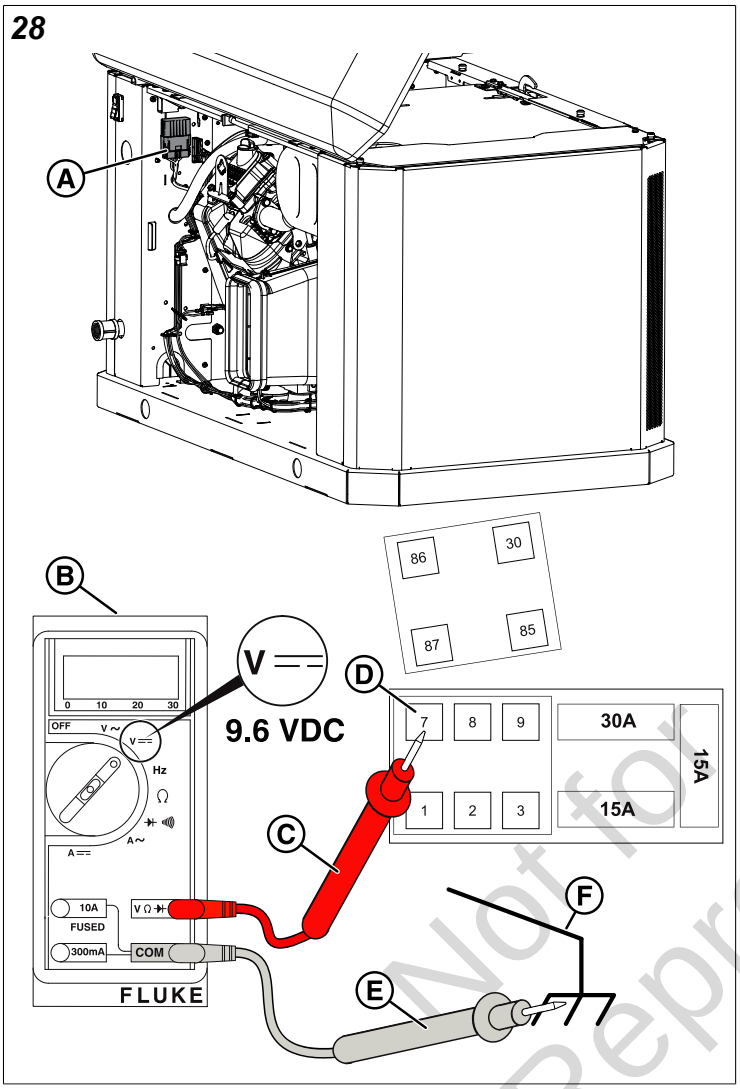

9. Press START/SELECT on the controller to crank the engine. Is DC voltage on Terminal 7 (Pin 86) equal to or greater than 9.6 VDC?

   a. **Yes -** Go to step 10.

   b. **No -** Inspect the wire between Terminal 7 on the starter relay (Wire E-56B) and Terminal 15 on the AVR (Wire 56B), which includes engine compartment and electrical bulk head connections. Test again.

10. Set the Digital Multimeter (A, Figure 29) to read ohms. Connect the red meter test lead (B) to Terminal 3 of the relay base (Pin 85) (C) and connect the black meter test lead (D) to ground (E). Is the Digital Multimeter showing "OL" (OPEN)?

    a. **Yes -** Repair or replace Wire E-0R. Test again.

    b. **No -** Go to step 11.

29

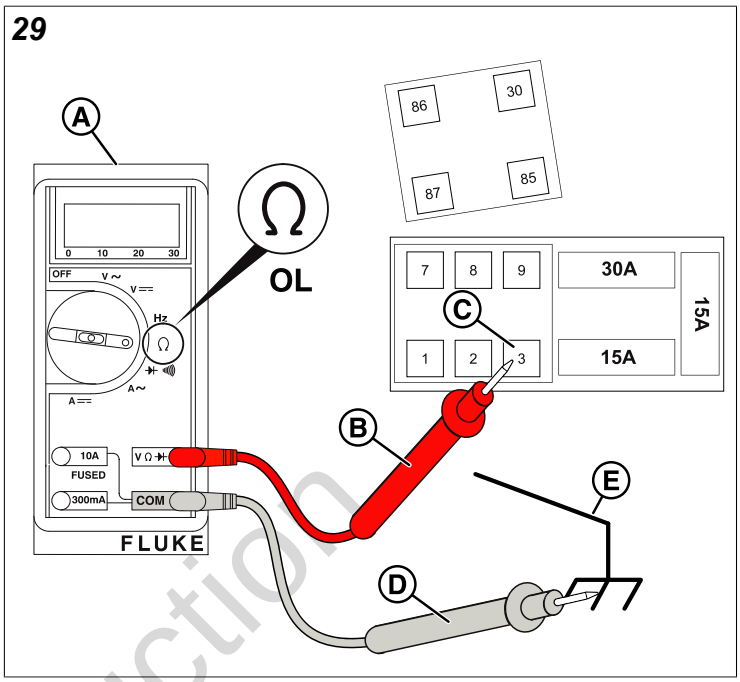

Not for Reproduction

11. Make sure the 30 amp ATM fuse is installed in the fuse block. Set the Digital Multimeter (A, Figure 30) to read DC volts. Connect the red meter test lead (B) to Terminal 9 of the relay base (Pin 30) (C) and connect the black meter test lead (D) to ground (E). Is Is DC voltage on Terminal 9 (Pin 30) equal to or greater than 9.6 VDC?
    a. **Yes -** Go to step 15.
    b. **No -** Go to step 12.

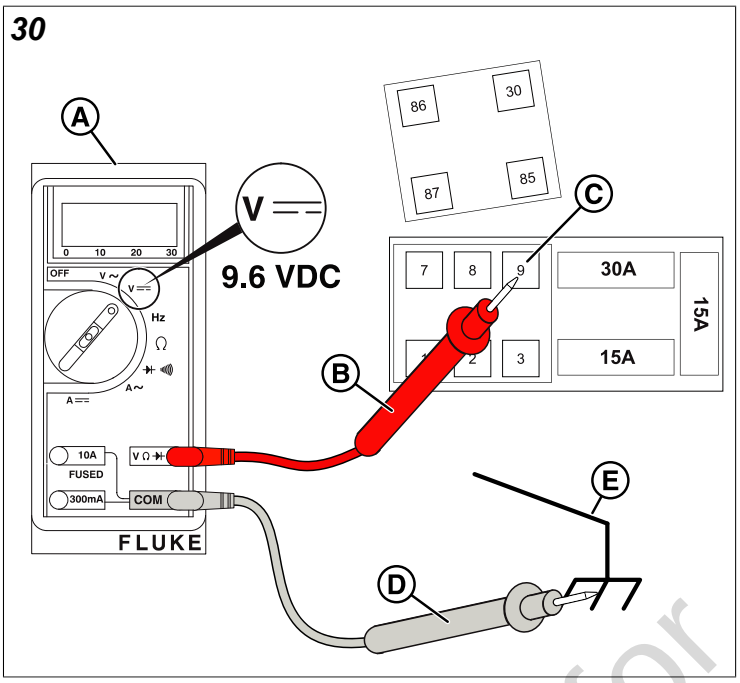

12. Locate and remove the 30 amp ATM starter fuse (so that both the starter relay and fuse are now removed). Set the Digital Multimeter (A, Figure 31) to read ohms. Connect the red meter test lead (B) to Terminal 9 of the relay base (Pin 30) (C) and connect the black meter test lead (D) to Terminal 10 of the relay base (E). Is the Digital Multimeter showing "OL" (OPEN)?
    a. **Yes -** Repair or replace Wire E-13F. Test again.
    b. **No -** Go to step 13.

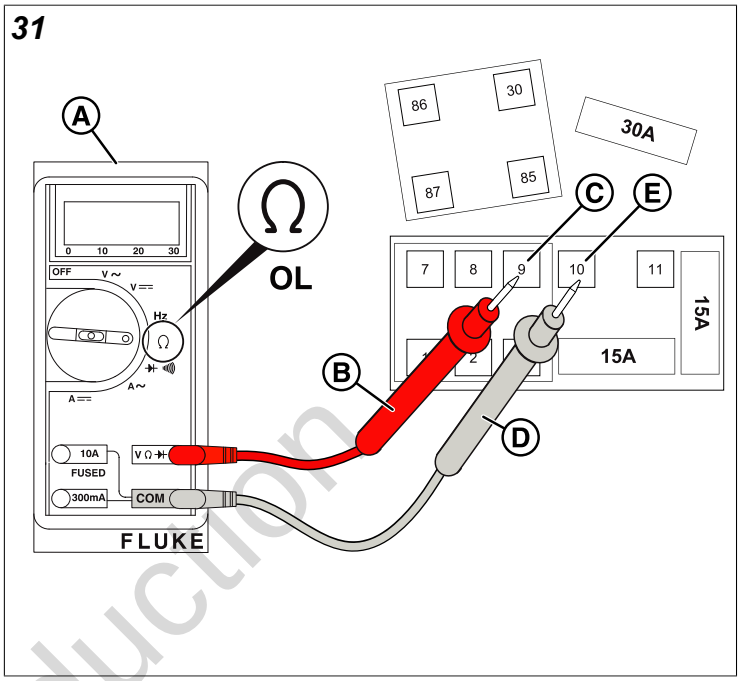

13. With the 30 amp ATM starter fuse removed (A, Figure 32), test the fuse for continuity. Is the fuse open (OL)?
    a. **Yes -** Replace the fuse. Test again.
    b. **No -** Go to step 14.

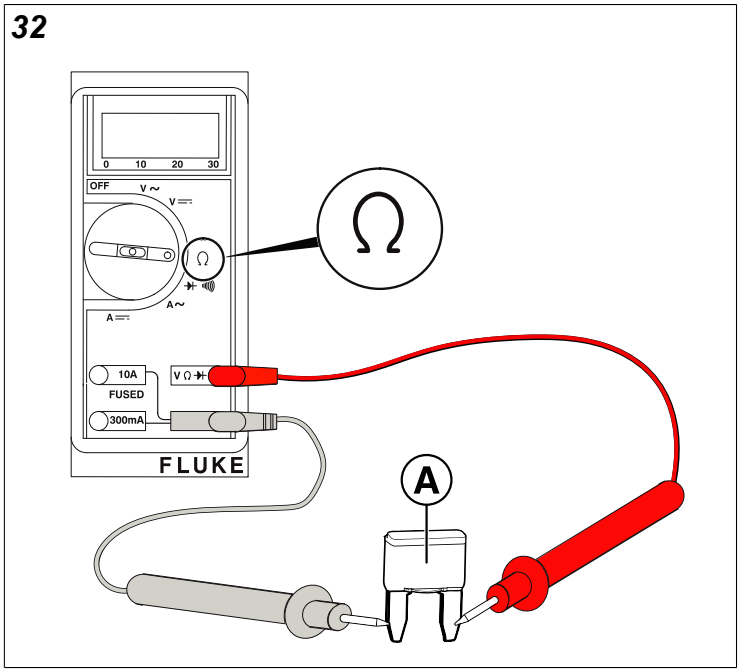

Not for Reproduction

14. Set the Digital Multimeter to read DC volts (A, Figure 33). Connect the red meter test lead (B) to Terminal 11 of the relay base (C) and connect the black meter test lead (D) to ground (F). Is the DC voltage on Terminal 11 equal to or greater than 9.6 VDC?

    a. **Yes -** Go to step 15.

    b. **No -** Repair or replace Wire E-13H to the splice in the battery positive (+) cable. Test again.

33

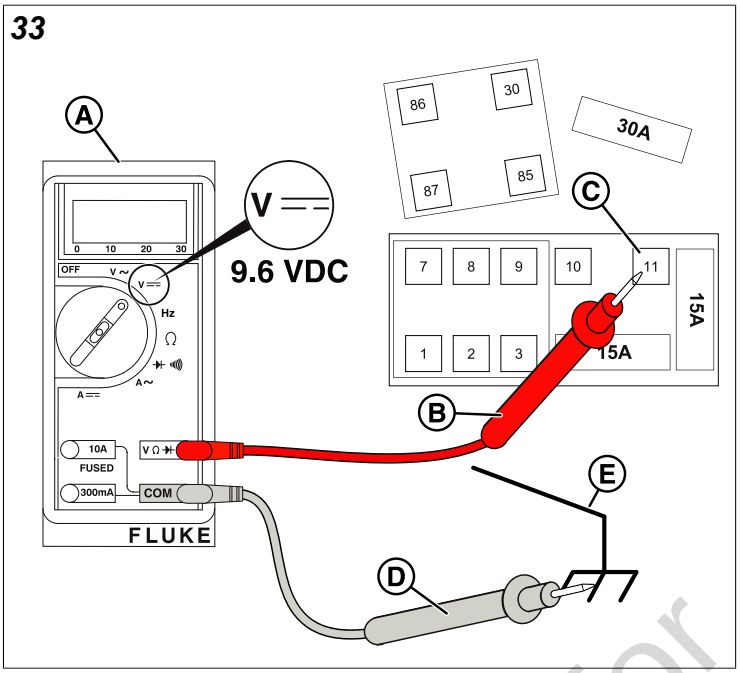

15. Disconnect the control Wire E-56C from the spade contact at the starter solenoid (A, Figure 34). Set the Digital Multimeter (B) to read ohms. Connect the red meter test lead (C) to Terminal 1 of the relay base (Pin 87) (D) and connect the black meter test lead (E) to Wire E-56C (F). Is the Digital Multimeter showing "OL" (OPEN)?

    a. **Yes -** Repair or replace Wire E-56C. Test again.

    b. **No -** Replace the starter relay. Test again.

NOTICE

If the engine does not crank after replacing the starter relay, refer to *Check Starter Motor* in *Section 6: Engine Troubleshooting* for further testing.

34

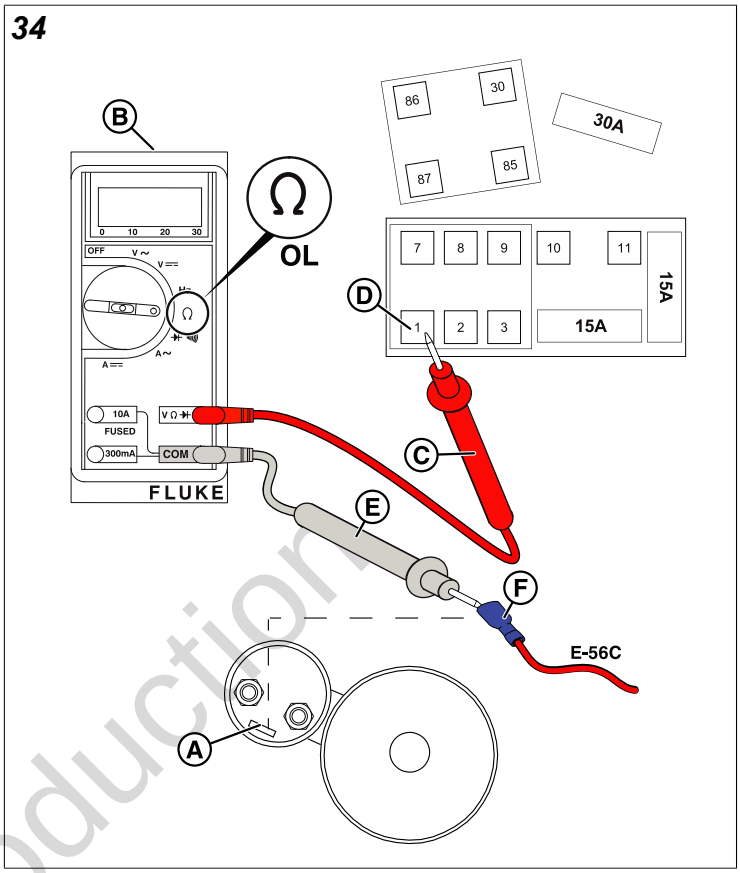

Not for Reproduction

Section 2: Engine Does Not Start

NOTICE
Wherever "Test again" appears, install the 15 amp ATM fuse for the controller in the fuse block, located in the engine compartment, if removed. From **Manual Mode** (Engine Off-Ready), press START/SELECT on the controller to check if the engine starts. If the test fails, remove the 15 amp fuse and proceed to the next step. If the test passes, go to *Section 3: Check Voltage*.

1. Press START/SELECT on the controller. Does the engine start?
   a. **Yes -** Go to *Section 3: Check Voltage*.
   b. **No -** Go to *Test 7: Check Fuel Supply Pressure*.

WARNINGS ----------30
TEST 7: CHECK FUEL SUPPLY PRESSURE ---------- 31
TEST 8: CHECK FUEL SOLENOID ----------31
TEST 9: CHECK FUEL PRESSURE REGULATOR ---------- 33
TEST 10: CHECK SPARK ---------- 34
TEST 11: CHECK CRANKCASE VACUUM ----------34
TEST 12: CHECK AND ADJUST VALVE CLEARANCE ----------34
TEST 13: CHECK FOR PROPER GENERATOR SHUT OFF ----------35

Not for Reproduction

Warnings

WARNING 

Generator and utility voltage could cause electrical shock or burn resulting in death or serious injury.

- Installation must be performed by a licensed professional.
- Disconnect all sources of electricity before installing or servicing equipment.
- Ground system before applying power.

WARNING 

Battery electrolyte fluid contains acid and is extremely caustic. Contact with battery contents could cause severe chemical burns.

- DO NOT open or mutilate the battery.
- Wear protective goggles, rubber apron, rubber boots and rubber gloves.
- Immediately wash electrolyte from skin with water.
- If electrolyte contacts eyes, immediately flush with water and seek medical attention.
- Spilled electrolyte is to be washed down with an acid neutralizing agent.
- A common practice is to use a solution of one pound (500 grams) bicarbonate of soda to one gallon (4 liters) of water. The bicarbonate of soda solution is to be added until the evidence of reaction (foaming) has ceased. The resulting liquid is to be flushed with water and the area dried.

WARNING 

Storage batteries give off explosive hydrogen gas during recharging. Slightest spark could ignite hydrogen and cause explosion, resulting in death or serious injury.

- DO NOT dispose of battery in a fire. Recycle battery.
- DO NOT allow any open flame, spark, heat, or lit cigarette during and for several minutes after charging a battery.
- Discharge static electricity from body before touching batteries by first touching a grounded metal surface.

WARNING 

Propane and Natural Gas are extremely flammable and explosive, which could cause burns, fire or explosion resulting in death or serious injury.

- LP gas is heavier than air and will settle in low areas.
- Natural gas is lighter than air and will collect in high areas.
- The slightest spark could ignite these fuels and cause an explosion.
- DO NOT allow any open flame, spark, heat, or lit cigarette.

WARNING 

Rotating parts could entangle hands, hair, clothing, or accessories resulting in death or serious injury.

- NEVER operate generator without protective housings, covers, or guards in place.
- DO NOT wear loose clothing, jewelry or anything that could be caught in rotating parts.
- Before servicing, stop the generator and disconnect the negative (-) cable at the battery.

WARNING 

Contact with muffler area could cause burns resulting in serious injury.

- DO NOT touch hot parts and AVOID hot exhaust gases.
- Allow equipment to cool before touching.

Not for Reproduction

Test 7: Check Fuel Supply Pressure

NOTICE

The generator inlet fuel pressure should be 11-14 inches WC (LP) or 3.5-7 inches WC (NG).

1. Close the main fuel supply valve to stop the flow of fuel to the generator.
2. Locate the installer-supplied fuel pressure test port closest to the generator.

NOTICE

If a test port does not exist, see the appropriate installation manual for instructions on installing it.

3. Obtain an analog manometer (A, Figure 35). Remove the test port plug and install the manometer to the fuel supply line test port (B).

35

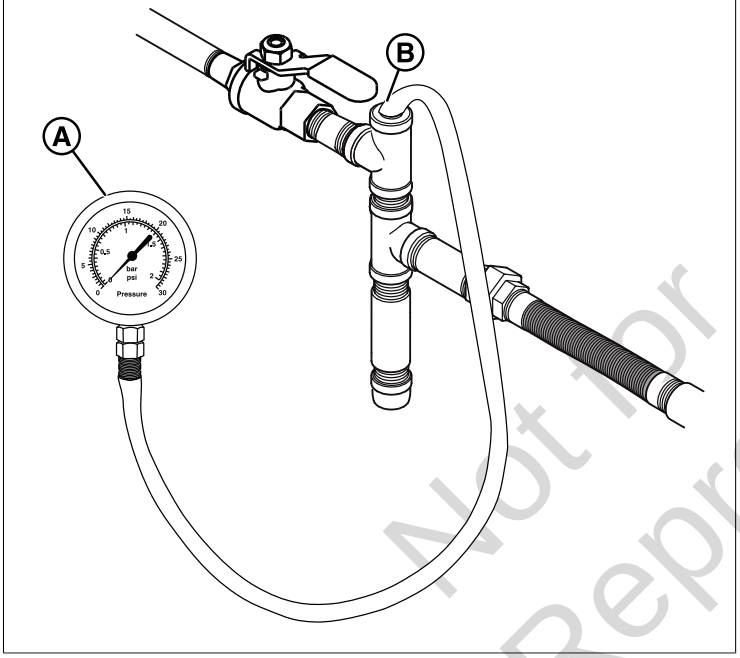

4. Open the main fuel supply valve to start the flow of fuel to the generator.
5. Inspect the manometer gauge. Is the generator inlet fuel pressure 11-14 inches WC (LP) or 3.5-7 inches WC (NG).
   a. **Yes -** Go to *Test 8: Check Fuel Solenoid*.
   b. **No -** Repair or replace fuel delivery system. Test again.

NOTICE

No more than 0.5 inches WC drop should be seen between static and dynamic fuel pressure and the fuel reading should be stable.

Test 8: Check Fuel Solenoid

1. Using a 5 mm Allen wrench, remove the test port plug from the fuel regulator.
2. Using the analog manometer (A, Figure 36), install the manometer to the fuel regulator test port (B).

36

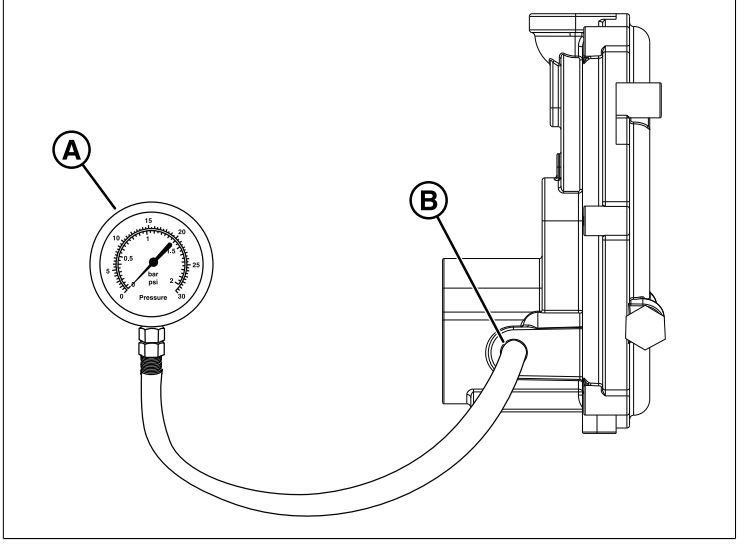

3. Is fuel pressure present?
   a. **Yes -** Go to *Test 9: Check Fuel Pressure Regulator*.
   b. **No -** Go to step 4.
4. Locate the fuel solenoid. The fuel solenoid (A, Figure 37) is inside the unit on the fuel regulator assembly (B).

37

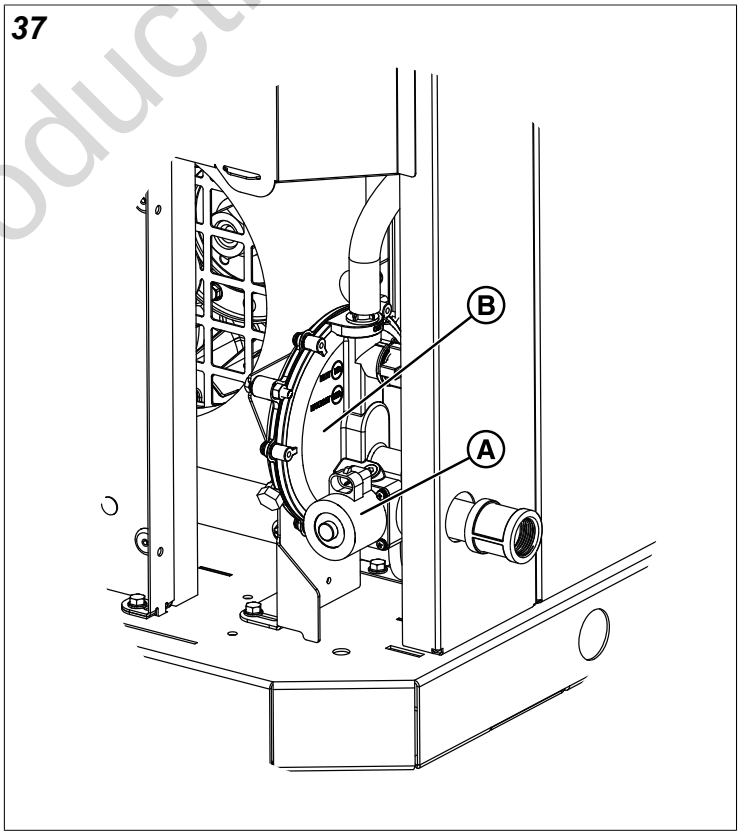

5. Set the Digital Multimeter (A, Figure 38) to read DC volts and install Fine-Point Needle Test leads.

Not for Reproduction

a. The fuel solenoid is part of the fuel regulator assembly. Disconnect the 2-pin connector (B, Figure 38) from the assembly (C). Connect the positive (+) meter test lead (D) lead to Wire 14B on the 2-pin connector (D) and connect the negative (-) meter test lead (E) to ground (F).

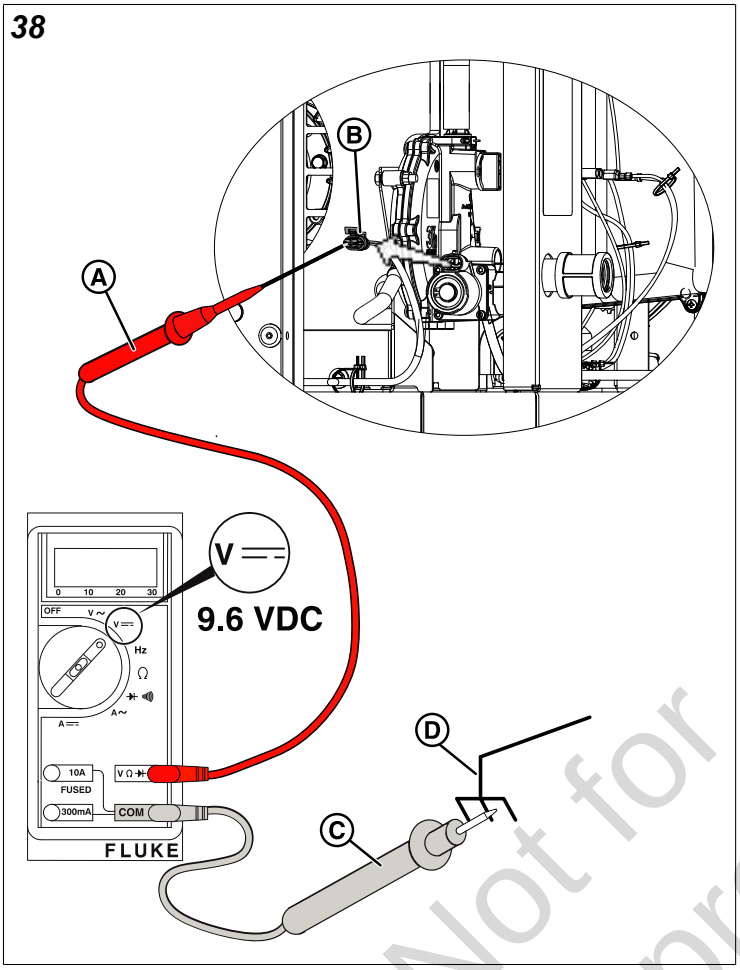

6. Measure DC Volts at the fuel solenoid while the engine is cranking. Is the voltage equal to or greater than 9.6 VDC?
   a. **Yes -** Go to step 7.
   b. **No -** Go to step 9.

NOTICE
There will not be voltage at the pauses between cranks. When activated, a "click" is heard at the fuel solenoid and that indicates that it opened correctly.

7. Set your Digital Multimeter to read ohms.
8. Measure the pin-to-pin coil resistance on the fuel solenoid. Is the resistance close to 11 ohms?
   a. **Yes -** Go to step 9.
   b. **No -** Install a new fuel solenoid. Test again.
9. Verify that the fuel supply valves are open.
10. Connect the 2-pin connector (Wires 14B and 0D) at the fuel solenoid.
11. Connect the positive (+) meter test lead (A, Figure 39) to Terminal 5 (Dig O/P C, Wire 14A) (B) on the controller. Connect the negative (-) meter test lead (C) to Terminal 1 (Wire 0B) (D).

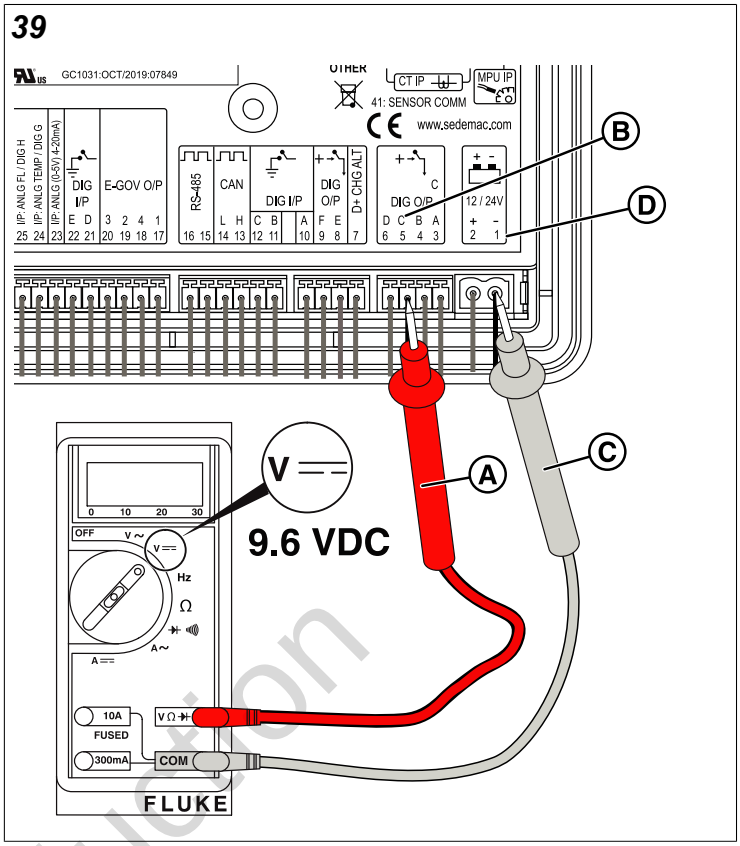

12. Measure DC volts while cranking. Is the voltage equal to or greater than 9.6 VDC?
   a. **Yes -** Go to step 13.
   b. **No -** Install a new controller. Test again and go to step 13.

Not for Reproduction

13. Attach the "Fine Point Extended Needle" test leads and back probe Terminal 18 (Wire 14A - Connector J2) (A, Figure 40) on the AVR with the red meter test lead (B) in and connect the other meter test lead (C) to ground (D). Is the DC voltage equal to or greater than 9.6 VDC?
    a. **Yes -** Go to step 14.
    b. **No -** Repair or replace Wire 14A between the AVR (Terminal 18) and the controller. Test again.

14. Back probe Terminal 3 (Wire 14B - Connector J2) (A, Figure 41) on the AVR with the red meter test lead (B) and connect the other meter test lead (C) to ground (D). Is the DC voltage equal to or greater than 9.6 VDC?
    a. **Yes -** Repair or replace 14B between the AVR (Terminal 3 - Connector J2) and the fuel solenoid. Test again.
    b. **No -** Replace the AVR. Test again.

40

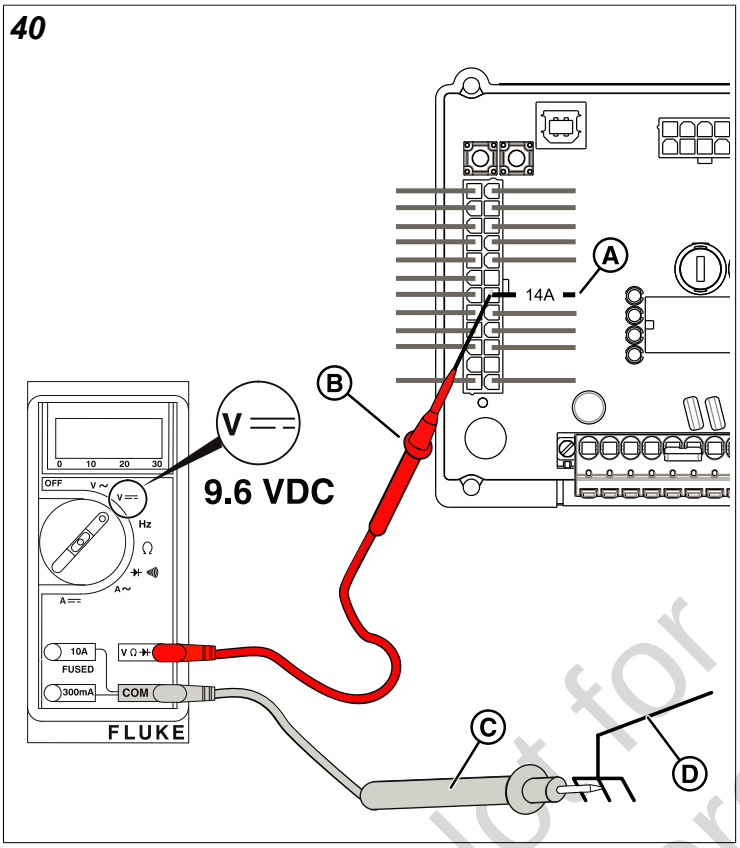

41

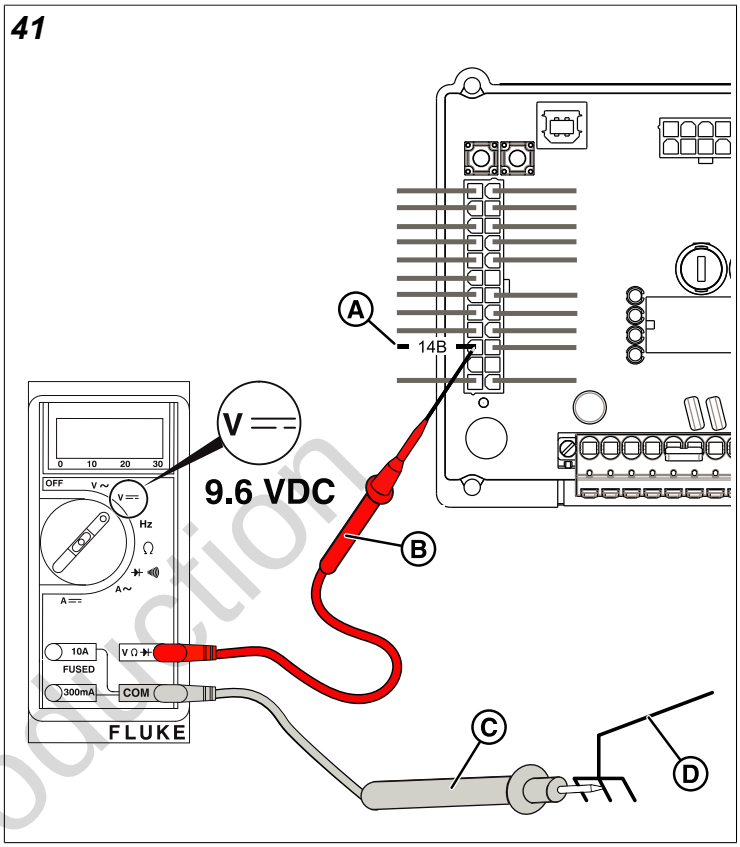

Not for Reproduction

Test 9: Check Fuel Pressure Regulator

1. Loosen the bolts holding the regulator to the base.
2. Install a barbed 1/8-inch NPT fitting into one of the two atmospheric pressure ports in the fuel pressure regulator. Attach a 24-inch length of hose to the fitting.
3. Install an analog manometer to the fuel pressure regulator test port.
4. Connect 2-pin connector (Wires 14C and 0D) to the fuel solenoid.
5. With the PMD set to the ON position and the controller in **Manual Mode**, press START/SELECT on the controller to crank the engine.

6. Very gently blow into the hose coming off of the atmospheric vent on the fuel regulator. Does the manometer show a decrease in pressure?
    a. **Yes -** Go to *Test 10: Check Spark*.
    b. **No -** Remove fuel solenoid from the fuel regulator and go to step 7.

NOTICE
When the fuel solenoid is energized (open) with battery voltage, the applied pressure allows fuel to pass through the fuel pressure regulator. Do not use compressed air, as the fuel pressure regulator diaphragm is easily ruptured.

7. Inspect the fuel solenoid plunger inside of the fuel regulator to make sure it is not sticking to the base. Is the plunger sticking to the base?
    a. **Yes -** Treat the plunger with a silicon-based lubricant. Reinstall the fuel solenoid and test again.
    b. **No -** Install a new fuel pressure regulator. Test again.

Test 10: Check Spark

1. Obtain two Ignition Testers (D in *Specialty Tools*).
2. Remove spark plug cables from the spark plug terminals.

NOTICE
Always pull on the boot at the terminal end of the cable. Pulling on the cable can result in damage.

3. Install the free end of the spark plug cables onto the tester prongs. Install the tester alligator clips onto the good engine grounds.

WARNING
Be sure there is no fuel or fuel vapors present, which, if spark-ignited, can cause a fire or explosion resulting in death or serious injury.

4. Press START/SELECT on the controller to start the engine.
5. Is spark present?
    a. **Yes -** Ignition is functioning properly. Go to step 6.
    b. **No -** Verify the spark tester is properly installed and repeat steps 4-5. If spark is still not present, install a new ignition coil, following instructions in the appropriate engine service manual. Test again.
6. Press STOP/CONFIG on the controller and remove the 15 amp ATM fuse for the controller in the fuse block or set the Generator Emergency Shutdown switch to the OFF position.
7. Remove the tester alligator clips from the engine grounds and install on the spark plug terminals.
8. Install a 15 amp ATM fuse for the controller in the fuse block and press START/SELECT to start the engine.
9. Is spark present?
    a. **Yes -** The ignition is operating properly. Go to *Test 11: Check the Crankcase Vacuum*.
    b. **No -** Go to step 10.
10. Fully clean the area around the spark plugs to keep debris out of the combustion chamber. Remove the spark plugs from the cylinder heads with a 5/8-inch spark plug socket, and then continue as follows:
    a. Check that the spark plug type is Champion XC92YC. Refer to your generator's operator's manual for the proper spark plug.
    b. Check that the spark plug is in good condition.
    c. Check that the spark plug gap is 0.030 inches (0.762 mm) for 18, 22, and 26 kW PowerProtect+ units.
    d. Are all of the above conditions observed?
        1. **Yes -** Reinstall spark plug(s) and tighten spark plugs to 180 in-lbs (20 Nm) using a spark plug socket. Go to *Test 11: Check the Crankcase Vacuum*.
        2. **No -** Install a new spark plug(s) and tighten spark plugs to 180 in-lbs (20 Nm) using a spark plug socket. Test again.

Test 11: Check Crankcase Vacuum

1. Obtain a digital vacuum gauge.
2. Remove the dipstick.
3. Insert the vacuum gauge tube into the dipstick tube.

NOTICE
The vacuum gauge must fit tightly.

4. Press START/SELECT on the controller to start the engine.
5. Is the vacuum gauge reading -5 to -10 inches WC?
    a. **Yes -** Go to *Test 12: Check and Adjust Valve Clearance*.
    b. **No -** See the appropriate Engine Service Manual.

NOTICE
If necessary, call Briggs & Stratton Technical Support for assistance.

Test 12: Check and Adjust Valve Clearance

NOTICE
For the best results, check valve clearance when the engine is cold.

1. Remove the spark plug cables from the spark plug terminals. Always pull on the boot at the terminal end or damage to the cable can occur.
2. Thoroughly clean the area around spark plugs to keep dirt out of the combustion chamber.
3. Remove spark plugs from cylinder heads using a 5/8-inch spark plug socket.
4. Turn the engine crankshaft in the direction of engine rotation until the piston of cylinder #1 is at top dead center (TDC) of the compression stroke.

Not for Reproduction

5. To ensure that the tappet is not resting on the compression release ball, insert a TDC tool (or wooden dowl or chopstick) into the spark plug hole and slowly turn the crankshaft in the same direction until the piston has moved 0.25 inches (6.0 mm) down the bore past TDC.
6. Remove the 4 screws with washers to release the valve cover.
7. Insert a feeler gauge between the rocker arm and intake valve stem. Verify that the intake valve clearance is 0.004-0.006 inches (0.102-0.152 mm).
8. If adjustment is necessary, proceed as follows:
    a. Obtain a Briggs & Stratton Valve Adjustment Set (E in *Specialty Tools*).
    b. Place the socket (13 mm hex) over the locknut.
    c. While holding the socket on the locknut, insert the Torx (T-40) bit through the hold to engage the adjuster screw.
    d. Rotate the socket counter-clockwise to loosen the locknut and slightly turn the adjuster screw in a clockwise or counter-clockwise direction (to either reduce or increase the valve clearance, respectively).
    e. While holding the Torx (T-40) bit on the adjuster screw to prevent rotation, turn the socket in a clockwise direction to tighten the locknut.
    f. Remove your tools and use the feeler gauge to check valve clearance. Repeat steps as necessary until the proper valve clearance is obtained.
    g. Tighten the locknut to 70 in-lbs (8 Nm). Check the valve clearance one more time to verify that the adjusting screw did not move when the locknut was torqued.
9. Insert the feeler gauge between the rocker arm and exhaust valve stem. Verify that the exhaust valve clearance is 0.007-0.009 inches (0.178-0.229 mm). If adjustment is necessary, repeat step 8.
10. Inspect and clean the gasket head surface and the rocker cover surface.
11. Replace the rocker cover gasket.
12. For big block engines, start 4 screws with washers to install the valve cover of cylinder #1. For small block engines, start 2 screws with washers.
13. Alternately tighten valve cover screws to 70 in-lbs (8 Nm) using a crosswise pattern.
14. Repeat steps 4-13 on cylinder #2.
15. Install spark plugs into cylinder heads and finger tighten until snug. Tighten spark plugs to 180 in-lbs (20 Nm) using a spark plug socket.
16. Install spark plug cables onto spark plug terminals.
17. Press START/SELECT on the controller. Does the engine start?
    a. **Yes -** Go to *Test 13: Check for Proper Generator Shutoff*.
    b. **No -** Refer to the engine's manual and/or call Technical Support.

Test 13: Check for Proper Generator Shut Off

1. With the generator running, press STOP/CONFIG on the controller. Does the engine shut down?
    a. **Yes -** Go to *Section 3: Check the Voltage*.
    b. **No and/or the "FAIL TO STOP" alarm is present on the controller -** Go to step 2.
2. Disconnect the 2-pin connector (Wires 14B and 0D) (A, Figure 42) from the fuel solenoid (B). Does the generator shut off?
    a. **Yes -** Go to step 3.
    b. **No -** Inspect and replace the fuel regulator assembly. Test again.
3. Set the Digital Multimeter (C, Figure 42) to read DC Volts and attach the "Fine Point Extended Needle" test leads. Connect the positive (+) meter test lead (D) lead to Wire 14B at the 2-pin connector and connect the negative (-) meter test lead (E) to ground (F). Is the voltage equal to or greater than 9.6 VDC?
    a. **Yes -** Go to step 4.
    b. **No -** Inspect and replace the fuel regulator assembly. Test again.

42

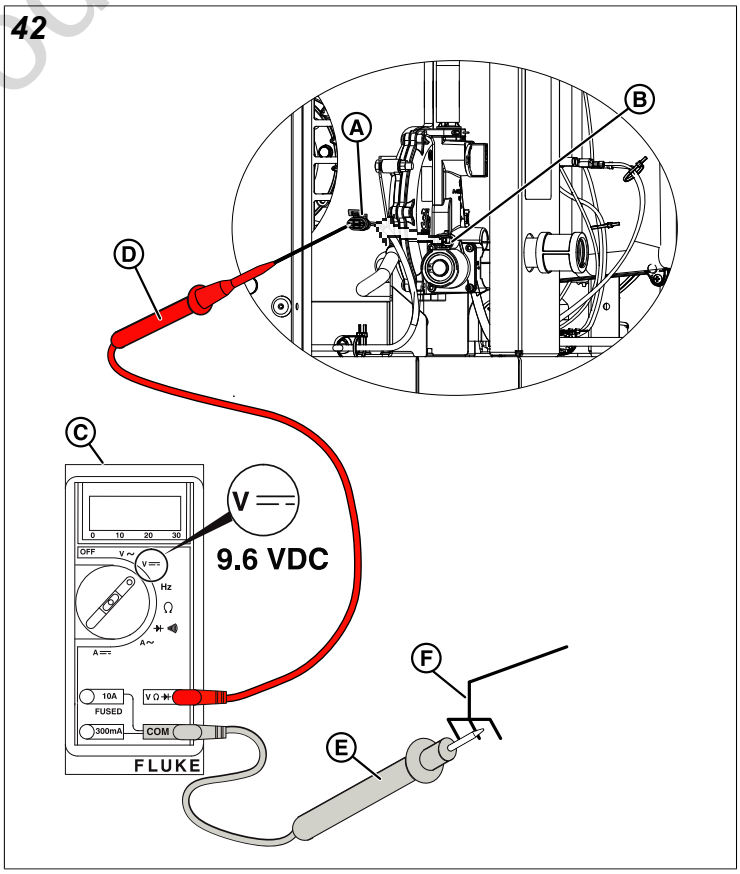

Not for Reproduction

4. Locate the generator controller. Back probe Terminal 5 (Dig O/P C, Wire 14A) (A, Figure 43) with the red meter test lead (B) and connect the black meter test lead (C) to ground (D). Is 9.6 VDC present?
   a. **Yes -** Replace the controller. Test again.
   b. **No -** Go to step 5.

5. Locate the AVR. Attach the "Fine Point Extended Needle" test leads and back probe Terminal 3 (Wire 14B - Connector J2) (A, Figure 44) with the red meter test lead (B) and connect the black meter test lead (C) to ground (D). Is 9.6 VDC present?
   a. **Yes -** Replace the AVR. Test again.
   b. **No -** Go to step 6.

43

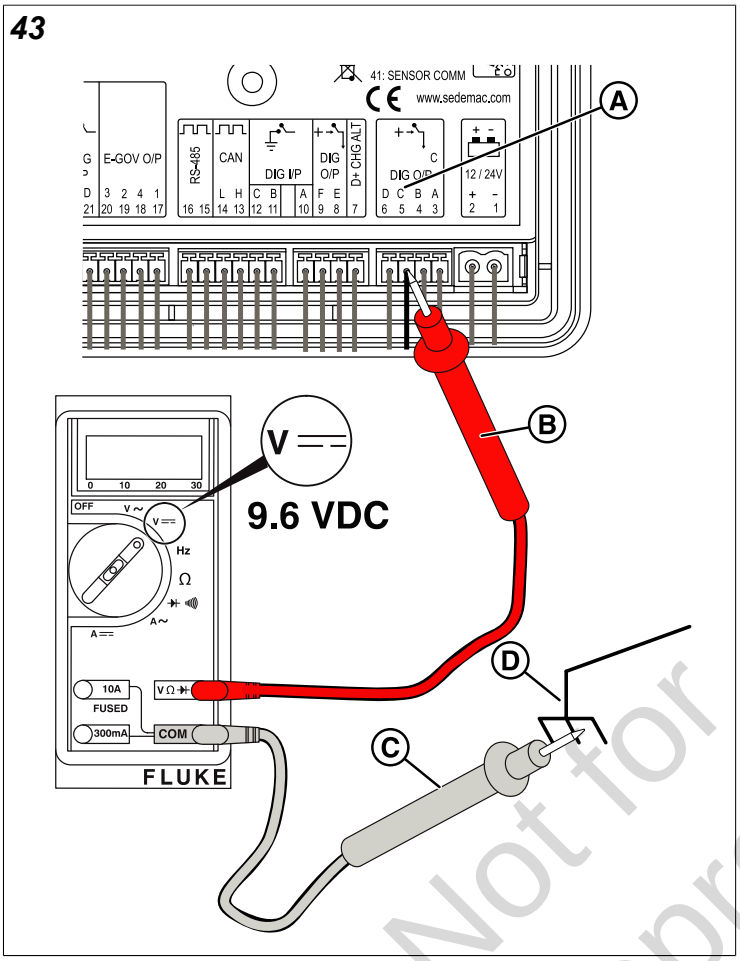

44

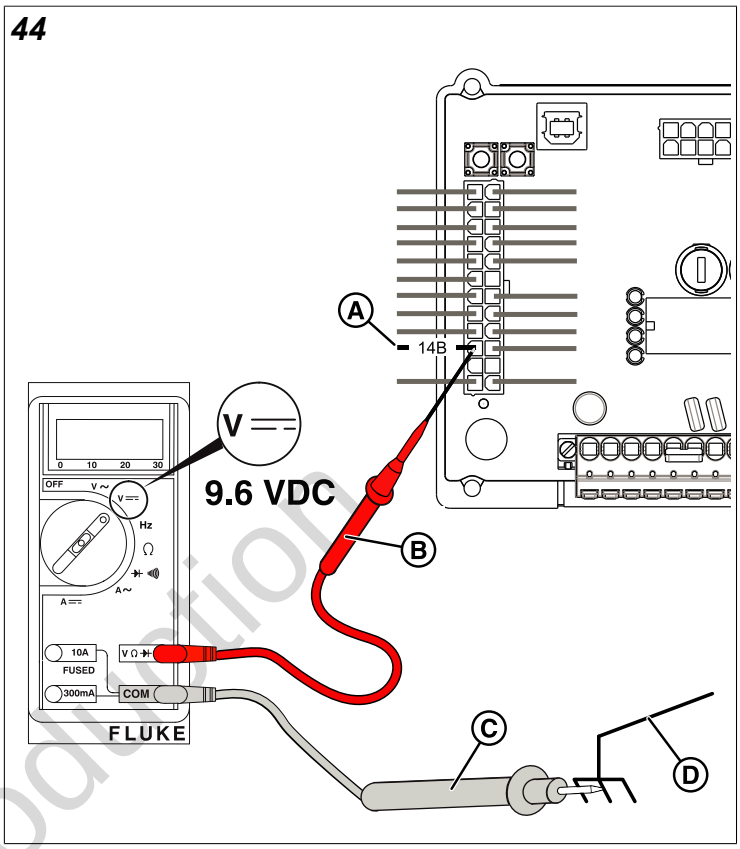

Not for Reproduction

6. Connect the positive (+) meter test lead (A, Figure 45) lead to Wire 14B at the 2-pin connector (B) and connect the negative (-) meter test lead (C) to ground (D). Is the voltage equal to or greater than 9.6 VDC?

   a. **Yes -** Go to step 7.

   b. **No -** Inspect and replace the fuel regulator assembly. Test again.

7. Disconnect Connector J2 from the AVR. Connect the positive (+) meter test lead (A, Figure 46) lead to Wire 14B at the 2-pin connector (B) and connect the negative (-) meter test lead (C) to ground (D). Is the voltage equal to or greater than 9.6 VDC?

   a. **Yes -** Replace the wiring harness.

   b. **No -** Inspect and replace the fuel regulator assembly. Test again.

45

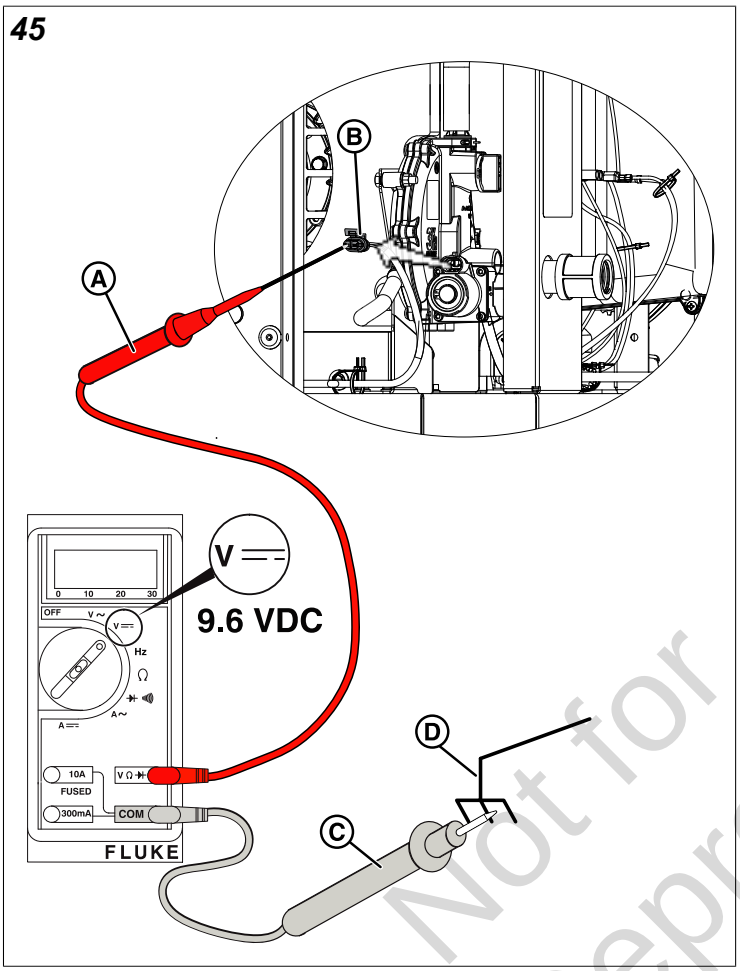

46

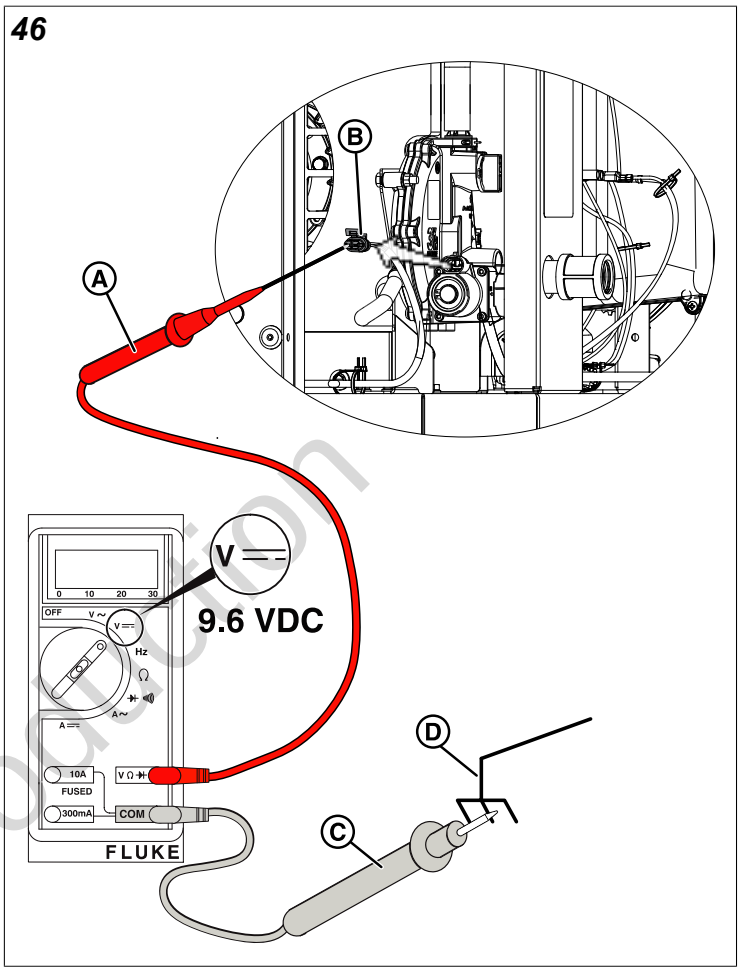

Not for Reproduction

This page is intentionally left blank.

Not for Reproduction

Section 3: Check Generator Output Voltage

NOTICE
Wherever "Test again" appears, install the 15 amp ATM fuse for the controller in the fuse block, located in the engine compartment, if removed. From **Manual Mode** (Engine Off-Ready), press START/SELECT on the controller to start the engine and then check for proper voltage. If the test fails, remove the 15 amp ATM fuse and proceed to the next step. If the test passes, advance to *Section 4: Check the Frequency*.

1. Press START/SELECT on the controller to start the engine. Does the engine have proper voltage?
   a. **Yes -** Go to *Section 4: Check the Frequency*.
   b. **No -** Go to *Test 14: Measure Circuit Breaker Load-Side Voltage*.

WARNINGS ----- 40
TEST 14: MEASURE CIRCUIT BREAKER LOAD-SIDE VOLTAGE ----- 41
TEST 15: MEASURE GENERATOR VOLTAGE AT THE CONTROLLER ----- 41
TEST 16: MEASURE CIRCUIT BREAKER LINE-SIDE VOLTAGE ----- 41
TEST 17: CHECK FIELD FLASH AT THE AVR ----- 42
TEST 18: CHECK ALTERNATOR WINDING RESISTANCE ----- 42
Test Stator Power Windings ----- 42
Test Stator Power Winding Sensing Wires ----- 44
Test Stator Excitation Windings ----- 46
Additional Stator Testing - Megohmmeter Test ----- 47
Check Rotor Resistance Through Brush Wires ----- 47
TEST 19: PERFORM AVR BYPASS TESTS ----- 49
Check AC Voltage ----- 49
Check DC Amperage ----- 50
Compare AVR Bypass Test Results ----- 52

Not for Reproduction

Warnings

WARNING 

Generator and utility voltage could cause electrical shock or burn resulting in death or serious injury.

- Installation must be performed by a licensed professional.
- Disconnect all sources of electricity before installing or servicing equipment.
- Ground system before applying power.

WARNING 

Battery electrolyte fluid contains acid and is extremely caustic. Contact with battery contents could cause severe chemical burns.

- DO NOT open or mutilate the battery.
- Wear protective goggles, rubber apron, rubber boots and rubber gloves.
- Immediately wash electrolyte from skin with water.
- If electrolyte contacts eyes, immediately flush with water and seek medical attention.
- Spilled electrolyte is to be washed down with an acid neutralizing agent.
- A common practice is to use a solution of one pound (500 grams) bicarbonate of soda to one gallon (4 liters) of water. The bicarbonate of soda solution is to be added until the evidence of reaction (foaming) has ceased. The resulting liquid is to be flushed with water and the area dried.

WARNING 

Storage batteries give off explosive hydrogen gas during recharging. Slightest spark could ignite hydrogen and cause explosion, resulting in death or serious injury.

- DO NOT dispose of battery in a fire. Recycle battery.
- DO NOT allow any open flame, spark, heat, or lit cigarette during and for several minutes after charging a battery.
- Discharge static electricity from body before touching batteries by first touching a grounded metal surface.

WARNING 

Rotating parts could entangle hands, hair, clothing, or accessories resulting in death or serious injury.

- NEVER operate generator without protective housings, covers, or guards in place.
- DO NOT wear loose clothing, jewelry or anything that could be caught in rotating parts.
- Before servicing, stop the generator and disconnect the negative (-) cable at the battery.

WARNING 

Contact with muffler area could cause burns resulting in serious injury.

- DO NOT touch hot parts and AVOID hot exhaust gases.
- Allow equipment to cool before touching.

Not for Reproduction

Test 14: Measure Circuit Breaker Load-Side Voltage

1. Locate the generator circuit breaker and remove the breaker cover plate.
2. Make sure that the generator circuit breaker is in the ON (Closed) position.
3. Install a 15 ATM amp fuse for the controller in the fuse block, located in the engine compartment, if removed.
4. Set the Digital Multimeter (A, Figure 47) to read AC volts. At the field connections block, connect the red meter test lead (B) to L1 and the black meter test lead (C) to L2, or to L1 (D) and L2 (E) on the circuit breaker. Press START/SELECT on the controller to start the engine. Is 240 VAC present at the load side of the circuit breaker or terminal block?
   a. **Yes -** Go to *Test 15: Measure Generator Voltage at the Controller*.
   b. **No -** Go to *Test 16: Measure Circuit Breaker Line-Side Voltage*.

47

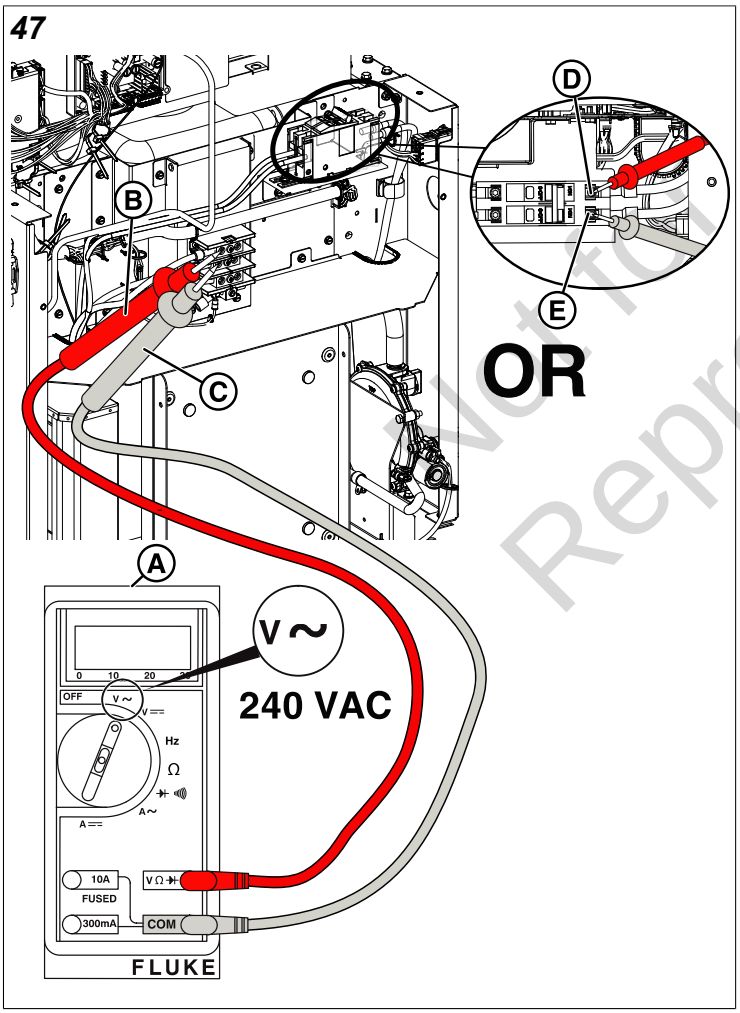

Test 15: Measure Generator Voltage at the Controller

1. With the engine running, back probe the socket terminals with one meter test lead (A, Figure 48) on Terminal 29 (Wire 11C) (B) and the other meter test lead (C) on Terminal 30 (Wire 44C) (D) at the back of the controller. Is 240 VAC present?
   a. **Yes -** Install a new controller. Test again.
   b. **No -** Repair or replace Wire 11C (Terminal 29) and/or Wire 44C (Terminal 30) (Refer to *Wiring Diagrams*). Test again.

48

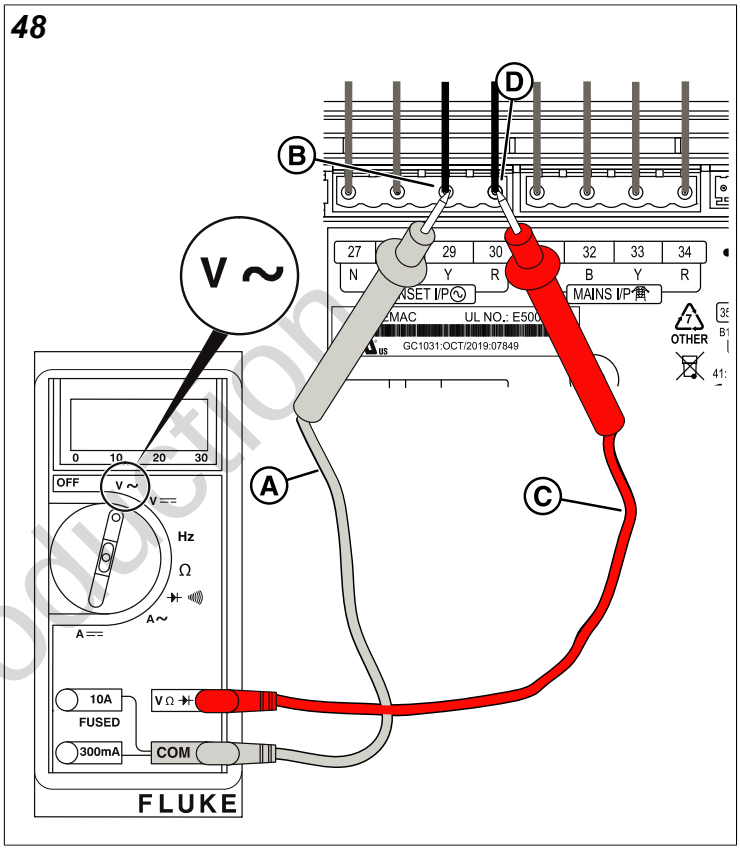

Test 16: Measure Circuit Breaker Line-Side Voltage

1. Locate the generator circuit breaker and remove the control panel plate (if not already removed).
2. Make sure that the generator circuit breaker is in the OFF (Open) position.

Not for Reproduction

3. Push START/SELECT on the controller to start the engine. With the engine running, back probe the socket terminals with one meter test lead (A, Figure 49) on the line-side L1 contact (B) and the other meter test lead (C) on the line-side L2 contact (D). Is voltage equal to or greater than 240 VAC?
   a. **Yes -** Manually cycle the circuit breaker. Test again. If the problem continues, install a new circuit breaker. Test again.
   b. **No -** Go to *Test 17: Check Field Flash at the AVR)*.

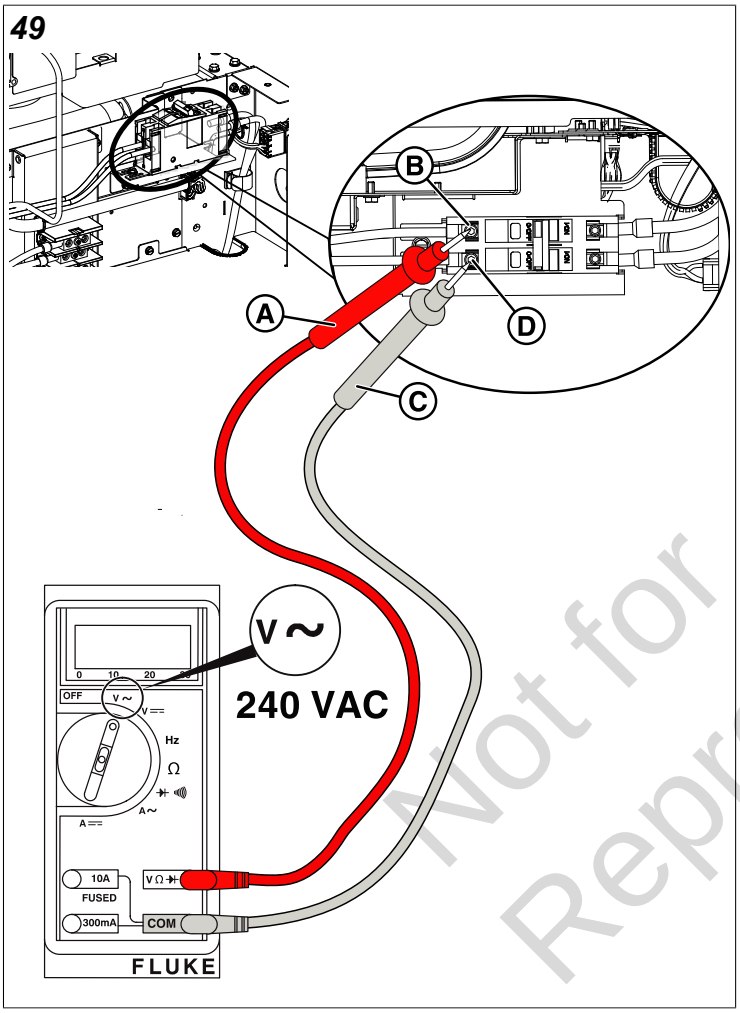

Test 17: Check Field Flash at the AVR

1. Make sure the Generator Emergency Shutdown switch is set to the ON position.
2. Locate the AVR and the PROGRAMMING/TEST button. Press and hold the button for 3 seconds and the blue communication and green power LEDs will alternately flash.
3. Set the Digital Multimeter (A, Figure 50) to read DC volts and install "Fine Point Extended Needle" Test Leads.
4. Back probe Terminal 8 (Wire G-4 - Connector J1) (B, Figure 50) on the AVR with the red meter test lead (C) and connect the other meter test lead (D) to ground (E). Is the DC voltage equal to or greater than 9.6 VDC?
   a. **Yes -** Go to *Test 18: Check Alternator Winding Resistance*.
   b. **No -** Replace the AVR. Test again.

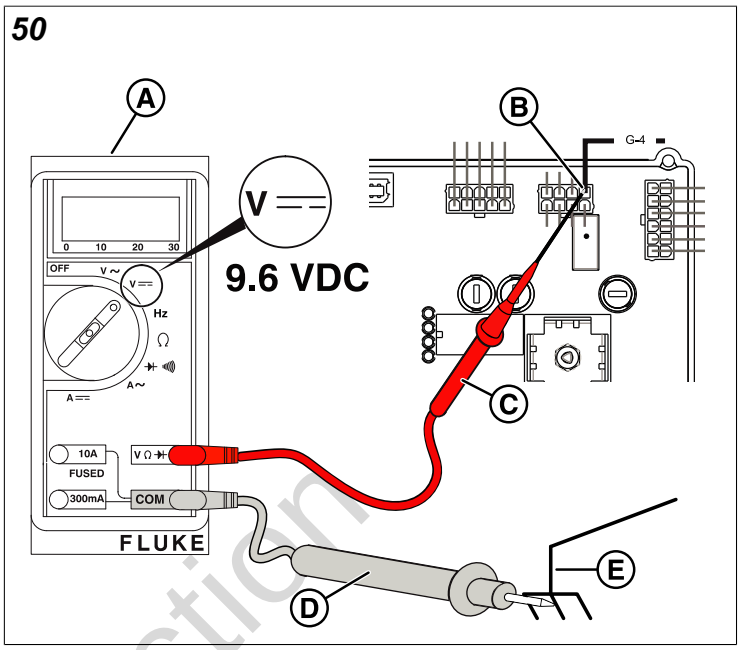

Test 18: Check Alternator Winding Resistance

1. Press STOP/CONFIG on the controller and remove the 15 amp ATM fuse for the controller in the fuse block, located in the engine compartment.
2. Remove fuses from the transfer switch (see your transfer switch's installation and operator's manual for the fuse location).
3. Make sure that the generator circuit breaker is in the OFF (Open) position.
4. Disconnect Wire 22 from the neutral lug.
5. Disconnect the J1 Connector from the AVR.
6. Go to *Test Stator Power Windings*.

Test Stator Power Windings

1. Locate the generator circuit breaker and remove the control panel cover plate (if not already removed).
2. Set the Digital Multimeter (A, Figure 51) to read ohms.

Not for Reproduction

3. Connect one meter test lead (B, Figure 51) to the unplugged neutral Wire 22 (C) from the electrical field connections and connect the other meter test lead (D) to Wire 11 (E) on the circuit breaker. Measure the resistance and **write down** the results.

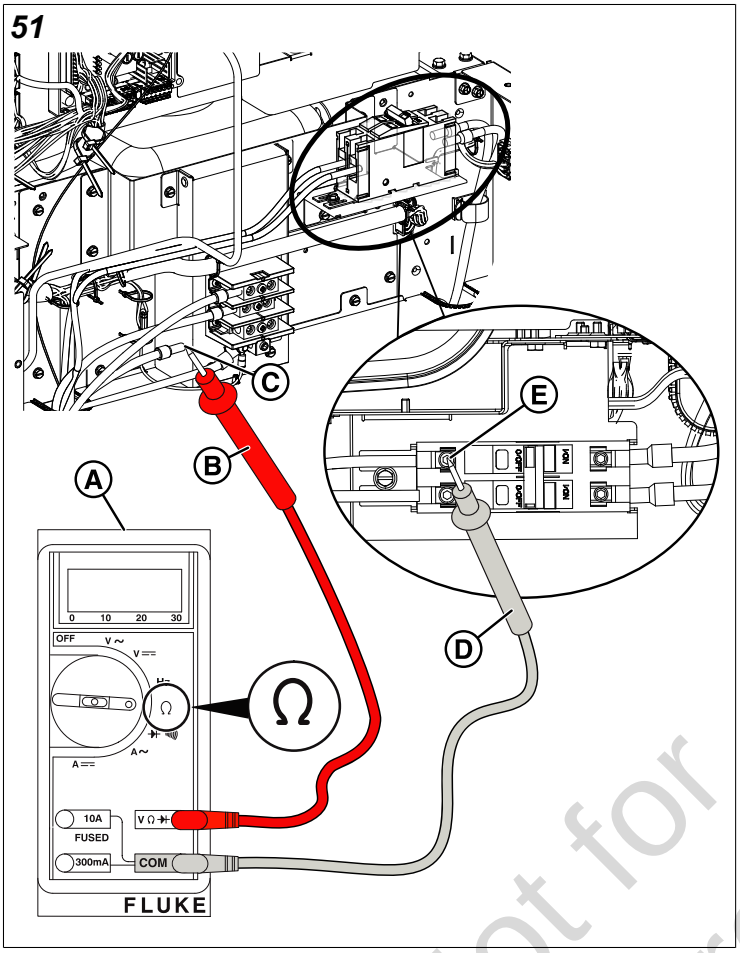

4. Connect one meter test lead (A, Figure 52) to the neutral Wire 22 (B) and the other meter test lead (C) to Wire 44 (D) on the circuit breaker. Measure the resistance and **write down** the results.

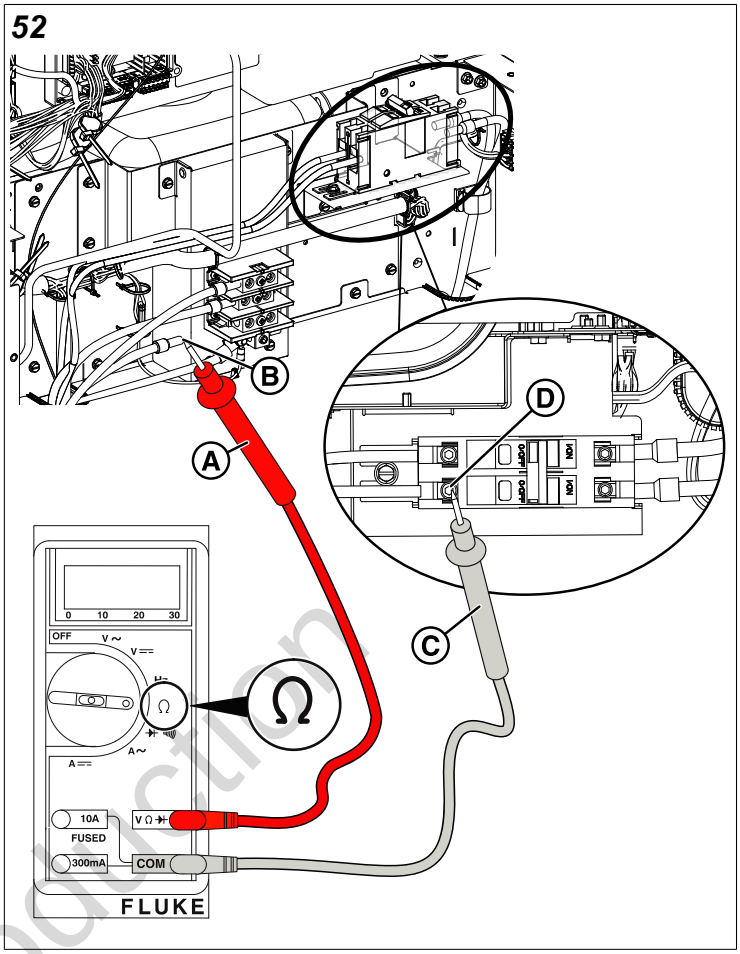

5. Compare the results obtained in steps 3-4. Based on meter quality, the readings should have approximately less than one ohm (with no more than one ohm) of difference between the windings. Are these your observations?

   a. **Yes -** Go to step 6.

   b. **No -** Low resistance indicates a shorted stator winding, while high resistance or infinity (OL) is an open in the power winding. A new stator is needed. Contact Briggs & Stratton Technical Support to receive prior authorization before installing a new stator. Test again.

Not for Reproduction

6. Connect one meter test lead (A, Figure 53) to Wire 11 (B) on the circuit breaker and the other meter test lead (C) to a proper engine ground (D). Measure the resistance and **write down** the results.

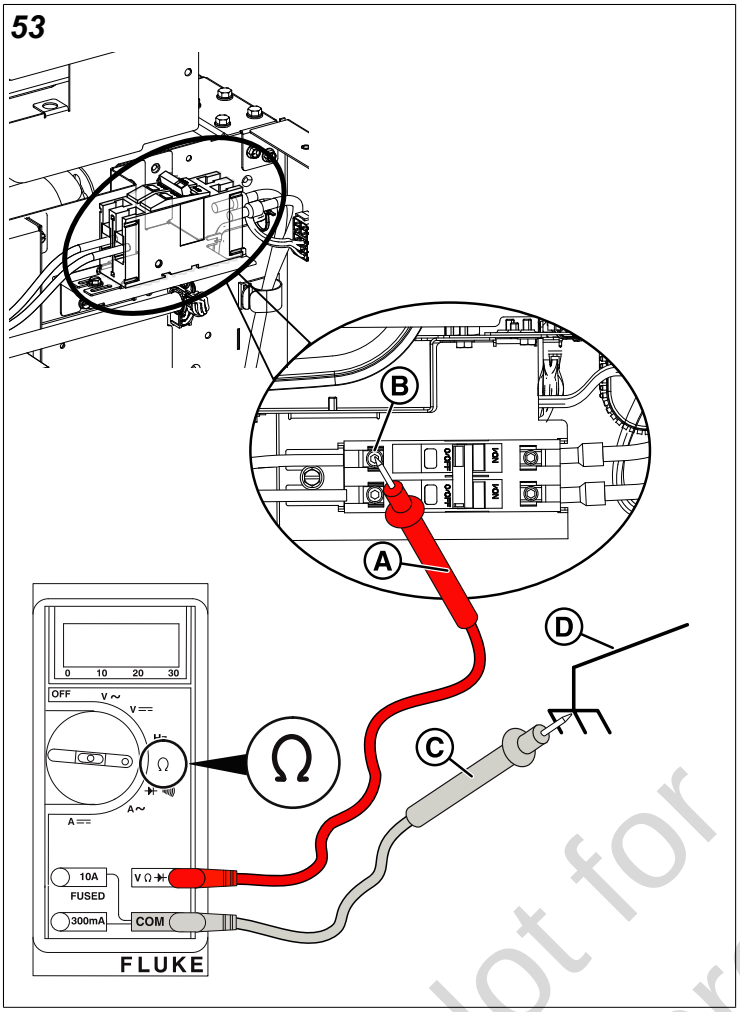

7. Connect one meter test lead (A, Figure 54) to Wire 44 (B) on the circuit breaker and the other meter test lead (C) to a proper engine ground (D). Measure the resistance and **write down** the results.

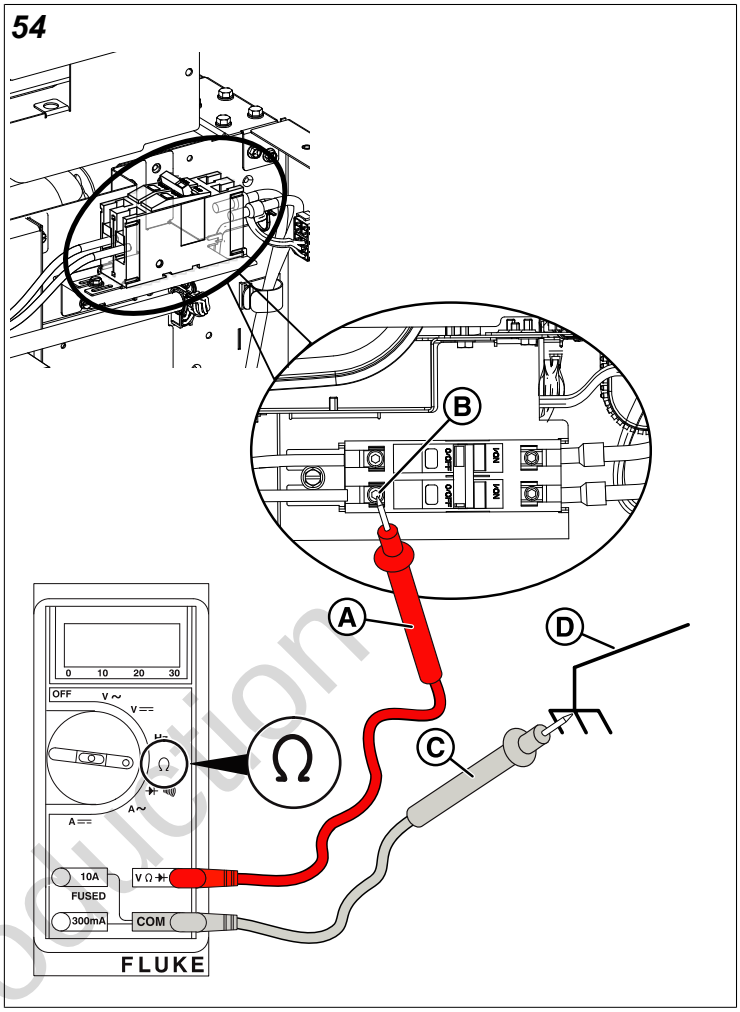

Not for Reproduction

8. Is a reading of infinity (O.L) obtained in steps 6-7?
   a. **Yes -** Go to *Test Stator Power Winding Sensing Wires*.
   b. **No -** Stator winding is shorted to ground. A new stator is needed. Contact Briggs & Stratton Technical Support to receive prior authorization before installing a new stator. Test again.

Test Stator Power Winding Sensing Wires

1. Locate the generator circuit breaker and remove the control panel cover plate (if not already removed).
2. Set the Digital Multimeter (A, Figure 55) to read ohms.

3. With the J1 Connector removed from the AVR, connect one meter test lead (B, Figure 55) to Terminal 1 (Wire G-11A) (C) and the other meter test lead (D) to Terminal 2 (Wire G-44A) (E). Is the resistance 0.06 - 0.10 ohms?

   a. **Yes -** Go to step 4.

   b. **No -** Low resistance indicates a shorted stator excitation winding, while high resistance or infinity (OL) is an open in the excitation winding. A new stator is needed. Contact Briggs & Stratton Technical Support to receive prior authorization before installing a new stator. Test again.

4. Connect one meter test lead (A, Figure 56) to a stator power winding sensing wire [either Terminal 1 (Wire G-11A) or Terminal 2 (Wire G-44A)] (B) and the other meter test lead (C) to an applicable engine ground (D). Is a reading of infinity (OL) seen?

   a. **Yes -** Go to step 5.

   b. **No -** Stator power winding sensing wires shorted to ground. A new stator is needed. Contact Briggs & Stratton Technical Support to receive prior authorization before installing a new stator. Test again.

55

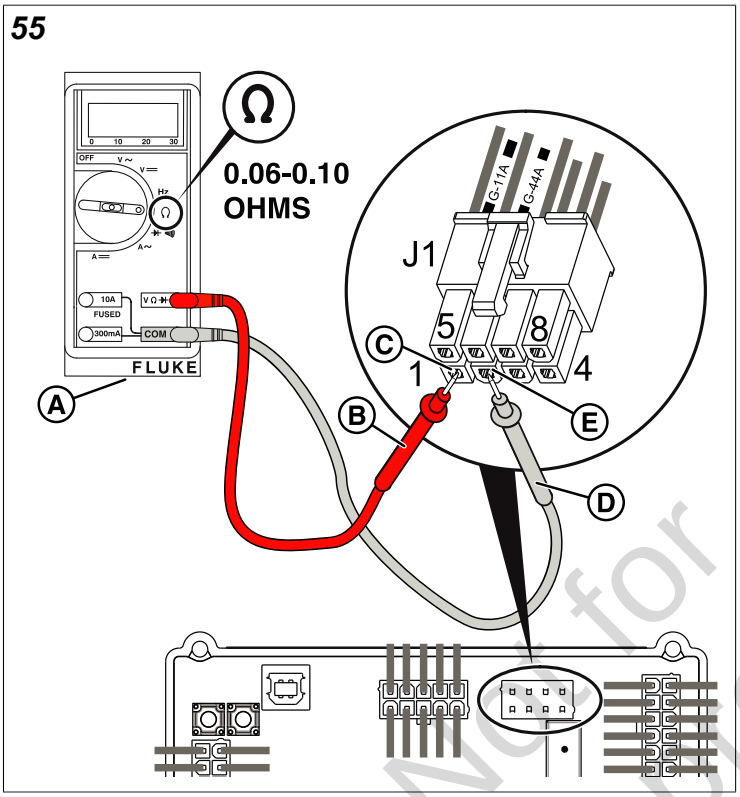

56

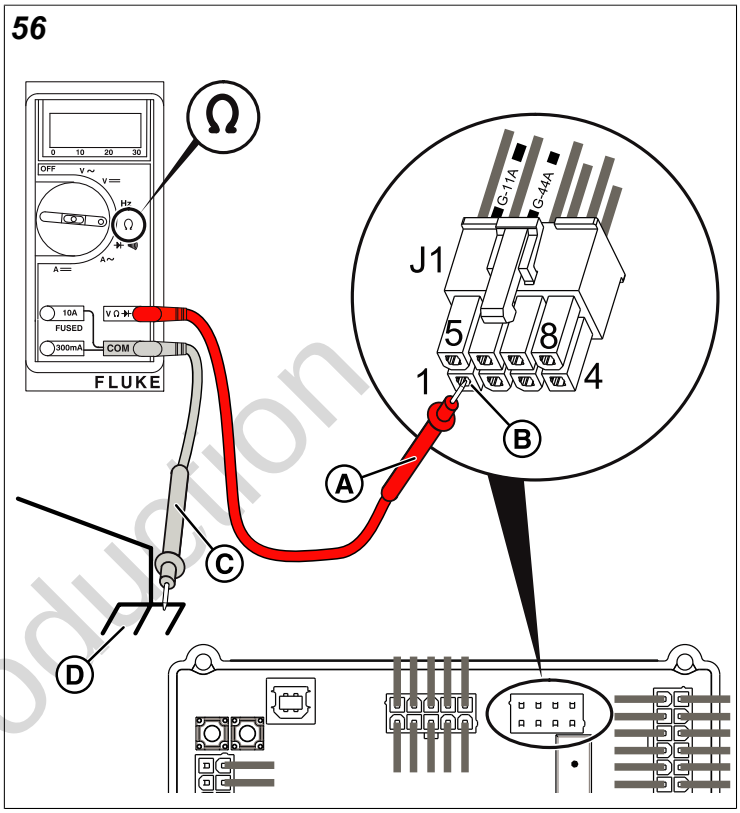

Not for Reproduction

5. Connect one meter test lead (A, Figure 57) to a stator excitation winding wire [either Terminal 6 (Wire G-2) or Terminal 7 (Wire G-6)] (B) and the other meter test lead (C) to a stator power winding sensing wire [either Terminal 1 (Wire G-11A) or Terminal 2 (Wire G-44A)] (D). Is a reading of infinity (OL) seen?
   a. **Yes -** Go to *Test Stator Excitation Windings*.
   b. **No -** Stator power winding shorted to excitation winding. A new stator is needed. Contact Briggs & Stratton Technical Support to receive prior authorization before installing a new stator. Test again.

3. With the J1 Connector removed from the AVR, connect one meter test lead (B, Figure 58) to Terminal 6 (Wire G-2) (C) and the other meter test lead (D) to Terminal 7 (Wire G-6) (E). Is the resistance 0.9-1.5 ohms?
   a. **Yes -** Go to step 4.
   b. **No -** Low resistance indicates a shorted stator excitation winding, while high resistance or infinity (O.L) is an open in the excitation winding. A new stator is needed. Contact Briggs & Stratton Technical Support to receive prior authorization before installing a new stator. Test again.

57

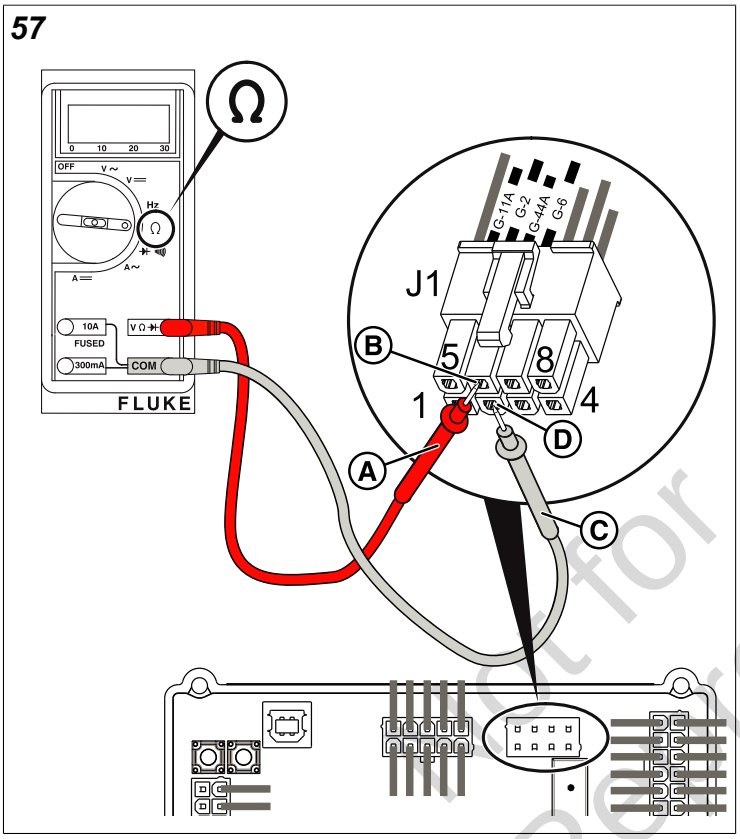

58

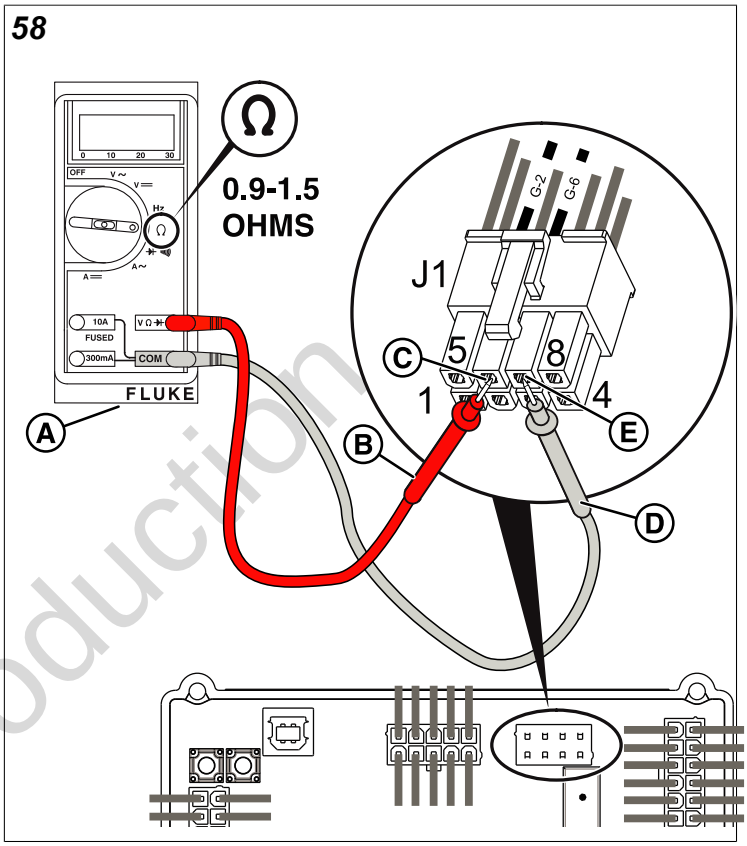

Not for Reproduction

Test Stator Excitation Windings

1. Locate the generator circuit breaker and remove the control panel cover plate (if not already removed).
2. Set the Digital Multimeter (A, Figure 58) to read ohms.

4. Connect one meter test lead (A, Figure 59) to the stator excitation wires either Terminal 6 (Wire G-2) or Terminal 7 (Wire G-6) (B) and the other meter test lead (C), to an applicable engine ground (D). Is a reading of infinity (OL) seen?

   a. **Yes -** Go to *Additional Stator Testing - Megohmmeter Test* .

   b. **No -** Stator excitation winding shorted to ground. A new stator is needed. Contact Briggs & Stratton Technical Support to receive prior authorization before installing a new stator. Test again.

59

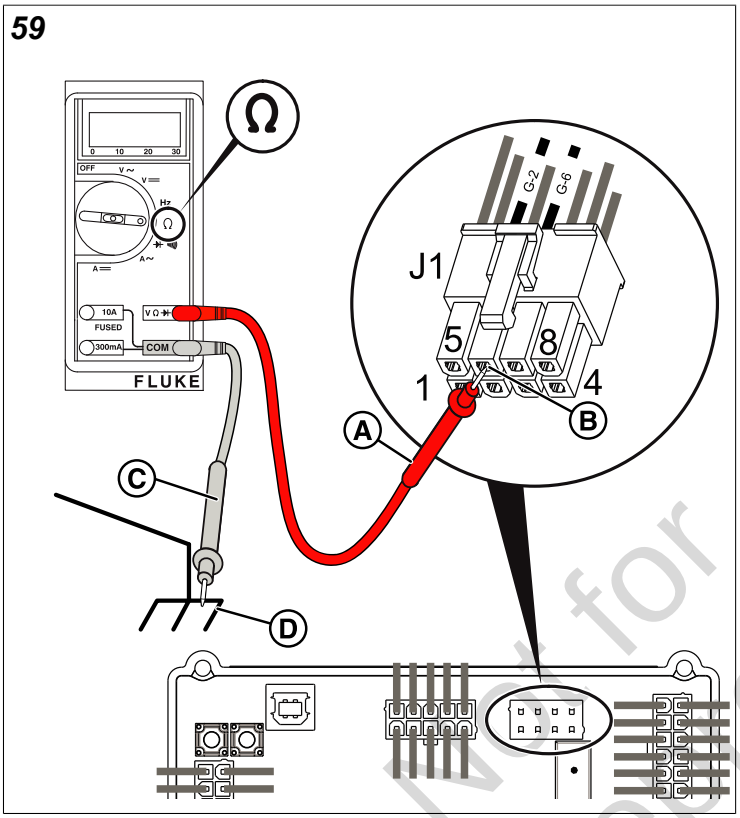

Additional Stator Testing - Megohmmeter Test

If the previous tests within *Test 18: Check Alternator Rotor Winding Resistance* have been completed and the resistance test results are still inconclusive, a megohmmeter (or Megger) test may be necessary.

NOTICE

If you do not have a Megger, go to *Check Rotor Resistance Through Brush Wires*.

Prior to conducting the megohmmeter test, disconnect all stator leads (Connector J1 on the AVR) and the GENSET I/P Connector (Terminals 27-30) on the controller.

1. Prior to conducting the megohmmeter test, disconnect all stator leads (Connector J1) on the AVR and the GENSET I/P Connector (Terminals 27-30) on the controller.
2. Make sure that the generator circuit breaker is in the OFF (Open) position.
3. Disconnect Wires 11 and 44 from the circuit breaker.
4. Disconnect Wire 22 from the neutral lug.
5. Follow the instructions of the megohmmeter manufacturer to connect the megohmmeter to the wires.
6. Apply 500 VDC to any stator lead (Wires 11, 22, and 44) and the stator frame (or ground). **Write down** the results.
7. Repeat step 6 on every stator lead until each coil has been tested. **Write down** the results.
8. If any reading is less than 0.5 megohm (500 kOhms), current flow to ground is likely. Repair or replace the stator.

NOTICE

A reading of 0.5 megohm (500 kOhms) or higher indicates a functional stator.

9. Go to *Check Rotor Resistance Through Brush Wires*.

Check Rotor Resistance Through Brush Wires

NOTICE

The rotor resistance can be measured through the brush wires (Wires G-1 and G-4 - Connector J1). This eliminates the need for further disassembly, but can result in a reading that is slightly higher than the specification. See *Check DC Amperage* in *Test 19: Perform AVR Bypass* if the measurement is not within 10% of specification.

1. Set the Digital Multimeter (A, Figure 60) to read ohms.
2. With the J1 Connector disconnected from the AVR, connect one meter test lead (B, Figure 60) to Terminal 5 (Wire G-1) (C) and the other meter test lead (D) to Terminal 8 (Wire G-4) (E).

60

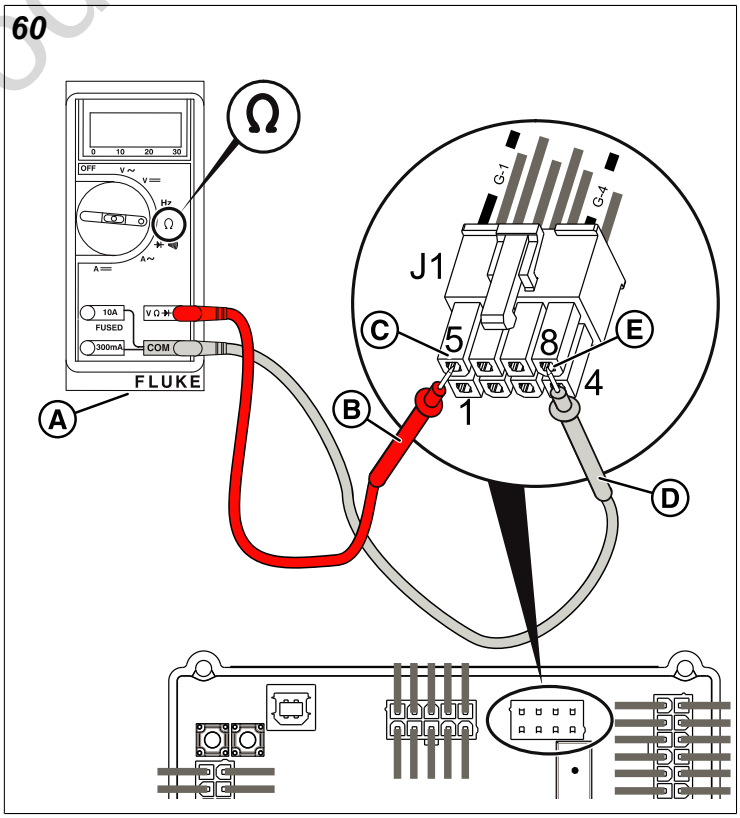

Not for Reproduction

3. Measure the rotor resistance. Is the resistance within the range listed in the *Alternator Resistance Chart* below?

   a. **Yes -** Go to step 5.

   b. **No -** A very low resistance can indicate a shorted rotor. A reading of infinity or a very high resistance can indicate that there is an open circuit or a partially open condition in the rotor windings. Go to step 4.

Alternator Resistance Chart			
HSB Power Node	Winding Resistance (ohms)		
	Rotor	Stator (Power Windings)	Stator (DPE)
18 kW	Wires 1-4: 30.555-37.345	Wires 11-44: 0.067-0.081	Wires 2-6: 0.918-1.122
22 kW	Wires 1-4: 30.555-37.345	Wires 11-44: 0.067-0.081	Wires 2-6: 0.918-1.122
26 kW	Wires 1-4: 11.01-12.05	Wires 11-44: 0.065-0.075	Wires 2-6: 0.946-0.97

4. Disassemble the generator if necessary to gain access to the rotor slip rings (A, Figure 61). Connect the meter test leads (B and C) to the slip rings. Is the resistance between slip rings within the range listed in the *Alternator Resistance Chart*?

   a. **Yes -** Repair or replace the brushes and/or wiring. Test again and go back to step 2.

   b. **No -** Rotor is faulty. Contact Briggs & Stratton Technical Support to receive prior authorization before installing a new rotor. Test again and go back to step 2.

NOTICE

Under certain loading conditions, oxide or brush deposits can accumulate on slip rings causing an increase in electrical resistance. If resistance is high, remove the brushes and clean the slip rings with an applicable surface-conditioning product, such as a 3M Scotch-Brite Hand Pad. Do not use sandpaper or an emery cloth, as abrasive particles will embed in the slip rings and brushes.

61

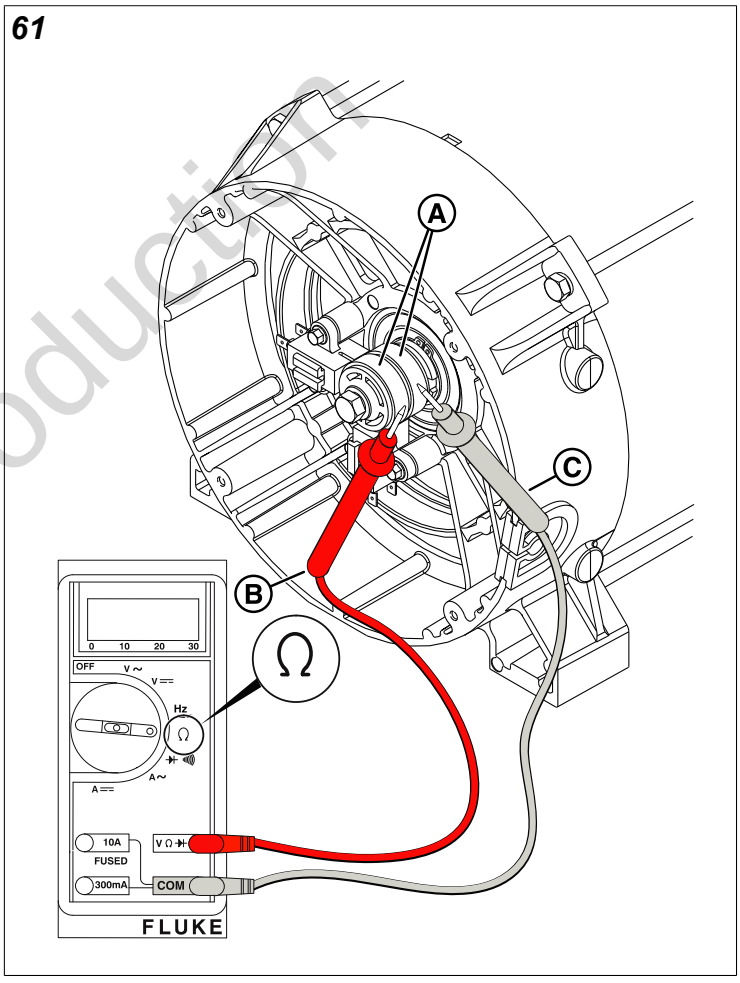

Not for Reproduction

5. Connect one meter test lead (A, Figure 62) to either brush wire [Terminal 5 (Wire G-1) or Terminal 8 (Wire G-4)] (B) and the other meter test lead (C) to an applicable engine ground (D). Is a reading of infinity (OL) seen?
   a. **Yes -** Go to *Test 19: Perform AVR Bypass Tests*.
   b. **No -** Rotor winding shorted to rotor shaft. Contact Briggs & Stratton Technical Support to receive prior authorization before installing a new rotor. Test again.

62

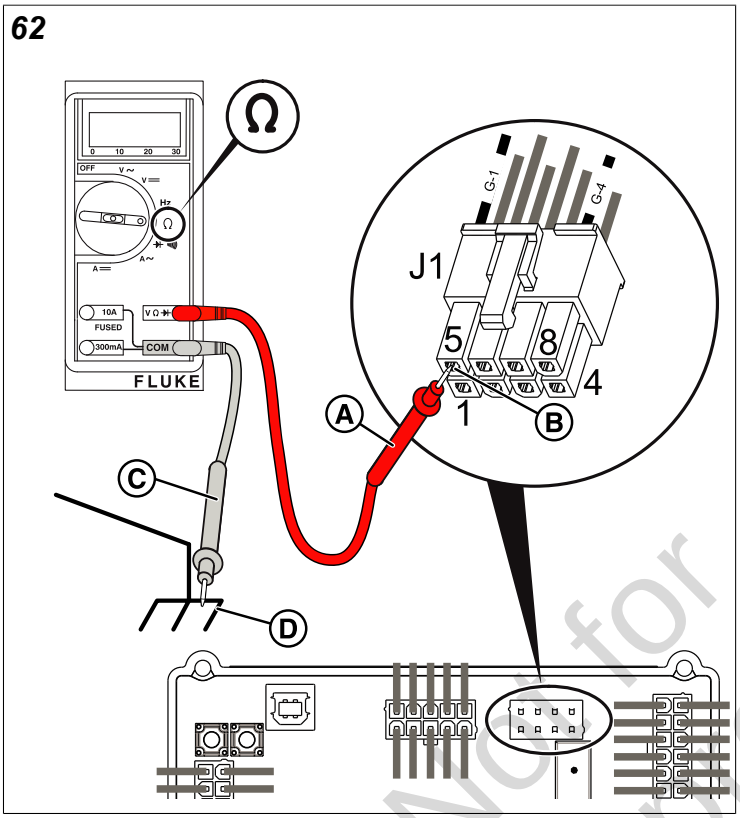

Test 19: Perform AVR Bypass Tests

NOTICE

If you bypass the AVR, all wiring and windings in the alternator can be tested without more disassembly. The tests require a **fully charged 12V battery**. If the battery is not fully charged, it will cause inaccurate readings that can result in a false diagnosis.

Jumper wires between rotor winding wires and the battery are **NOT** needed for this test.

AVR faults displayed on the controller must be cleared between tests.

Check AC Voltage

1. Make sure that the 15 amp ATM fuse for the controller is installed in the fuse block, located in the engine compartment.
2. Make sure the Generator Emergency Shutdown switch is set to the ON position.
3. Set the generator circuit breaker to the OFF (Open) position.
4. Locate the AVR and the PROGRAMMING/TEST button. Press and hold the button for 3 seconds and the blue communication and green power LEDs will alternately flash.
5. Set the Digital Multimeter (A, Figure 63) to read DC voltage and install "Fine Point Extended Needle" Test Leads.
6. Confirm the AVR is in test mode by back probing Terminal 8 (Wire G-4 - Connector J1) (A, Figure 63) on the AVR with the red meter test lead (B) and connect the other meter test lead (C) to ground (D). Is the DC voltage equal to or greater than 9.6 VDC?
   a. **Yes -** Go to step 7.
   b. **No -** Replace the AVR. Test again.

63

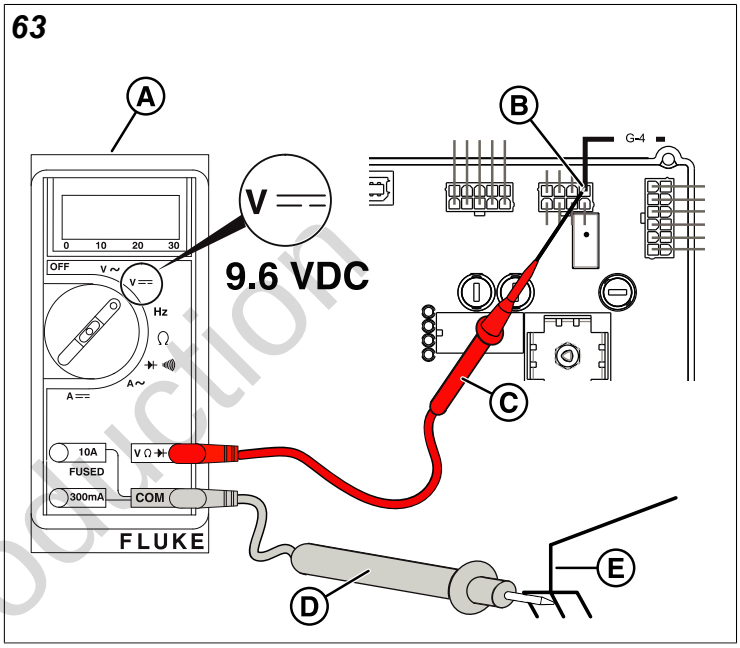

7. Set the Digital Multimeter (A, Figure 64 to read AC Voltage.

Not for Reproduction

8. Back probe Terminal 6 (Wire G-2 - Connector J1) (B, Figure 64) with the red meter test lead (B) and back probe Terminal 7 (Wire G-6 - Connector J1) (D) with the other meter test lead (E).

64

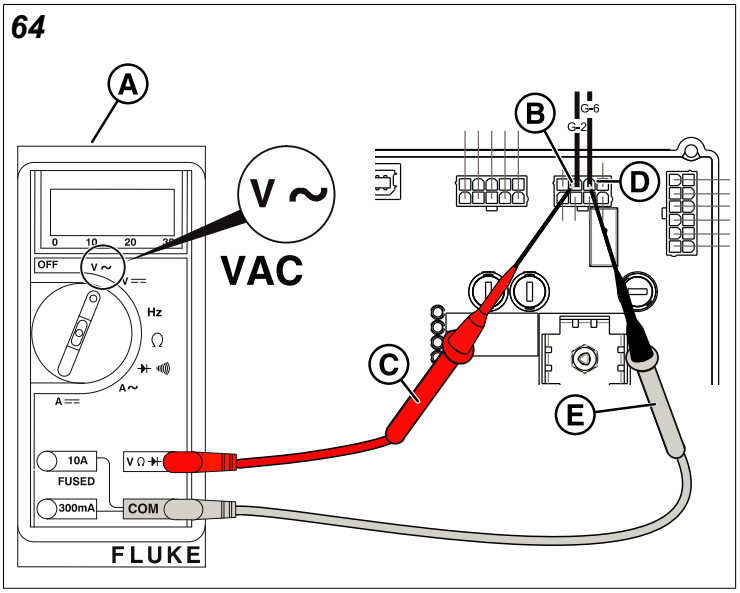

9. Press START/SELECT on the controller to start the engine and **write down** the value that best describes your results.
10. Press STOP/CONFIG on the controller.
11. Is the voltage less than 100 VAC?
    a. **Yes -** Locate and remove the F1 fuse at the AVR. Go to step 12.
    b. **No -** Go to step 13.
12. Check the F1 fuse. Is the fuse blown?
    a. **Yes -** Replace the fuse and go back to step 6.
    b. **No -** Go to step 13.
13. Are the blue communication and green power LEDs alternately flashing on the AVR?
    a. **Yes -** Go to step 14.
    b. **No -** Locate the AVR and the PROGRAMMING/TEST button. Press and hold the button for 3 seconds and the blue communication and green power LEDs will alternately flash. Go to step 14.
14. Test the power winding sensing wires by back probing Terminal 1 (Wire G-11A - Connector J1) (A, Figure 65) with one meter test lead (B) and back probing Terminal 2 (Wire G-44A - Connector J1) (C) with the other meter test lead (D).

65

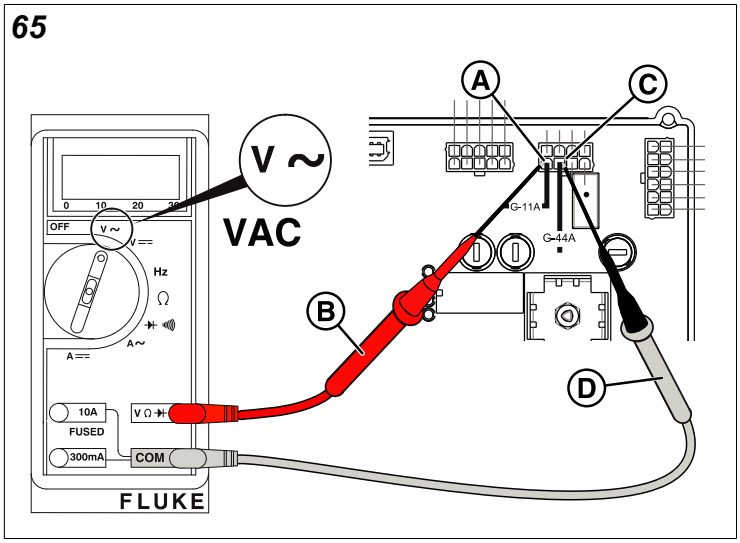

15. Press START/SELECT on the controller to start the engine and **write down** the value that describes your results..
16. Press STOP/CONFIG on the controller.
17. Refer to your results from steps 9 and 15. Was the AC voltage less than 100 VAC for both steps?
    a. **Yes -** Go to *Check DC Amperage*.
    b. **No -** Go to *Compare AVR Bypass Test Results*, located after *Check DC Amperage*.

NOTICE

The *Check DC Amperage* test should only be conducted if BOTH the power and excitation winding tests fail to meet specifications. If the power and winding excitation winding tests show acceptable results, there is no need to conduct DC amperage testing.

Check DC Amperage

NOTICE

This test will require a Digital Multimeter and a clamp meter. The exact amperage readings may vary depending on ambient temperature, battery voltage, meter calibration, etc.

1. Install the 15 amp ATM fuse for the controller in the fuse block, located in the engine compartment (if not already installed).
2. Make sure the Generator Emergency Shutdown switch is set to the ON position.
3. Set the generator circuit breaker to the OFF (Open) position.
4. Locate the AVR and the PROGRAMMING/TEST button. Press and hold the button for 3 seconds and the blue communication and green power LEDs will alternately flash.

Not for Reproduction

5. Set the Digital Multimeter (A, Figure 66) to read DC voltage and install "Fine Point Extended Needle" Test Leads.
6. Back probe Terminal 8 (Wire G-4 - Connector J1) (A, Figure 66) on the AVR with the red meter test lead (B) and connect the other meter test lead (C) to ground (D). Is the DC voltage equal to or greater than 9.6 VDC?
   a. **Yes -** Go to step 7.
   b. **No -** Replace the AVR. Test again.

66

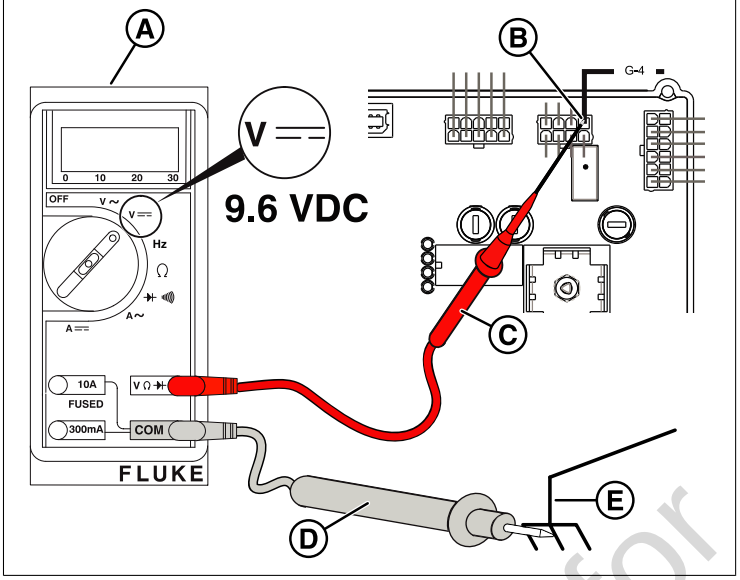

7. Set the clamp meter (A, Figure 67) to read DC amperage. See your clamp meter instruction manual for details.
8. Capture Wire G-1 (B, Figure 67) in the jaw of the meter. Measure the static amp draw and **write down** the results.

NOTICE

For accurate results, make sure the wire is in the center of the meter.

67

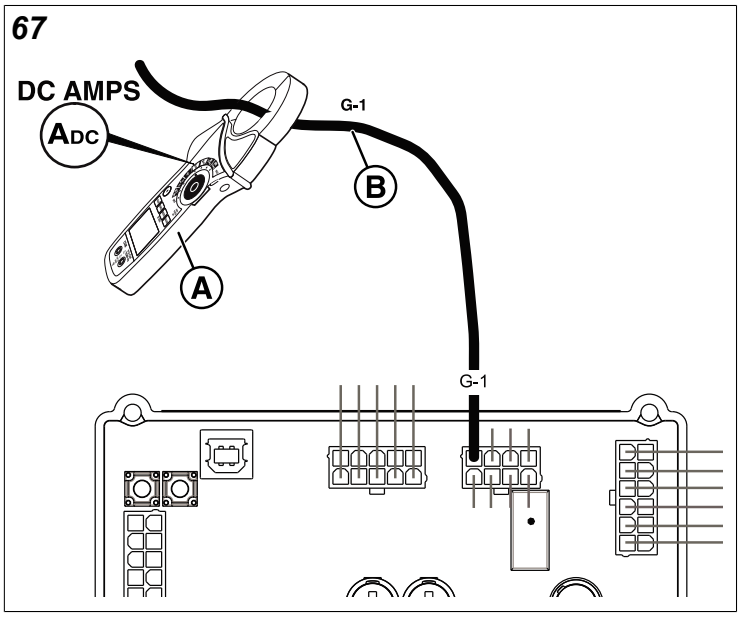

9. Press START/SELECT on the controller to start the engine.
10. Measure the DC amperage. **Write down** the value that describes your results.

NOTICE

Current, measured in amperes, in a circuit can be calculated by using Ohm's Law. Voltage divided by resistance (ohms) equals current (amps). The equation is **I = V/R**. For example, if the voltage (V) of a circuit equals 12 volts and the resistance in ohms (R) equals 12 ohms, then by using the equation, there is 1 amp (I) (12V/12R = 1I).
Normal readings are 1.0-1.5 amps (18-22 kW) or 0.6-0.75 amps (26 kW).

11. Press STOP/CONFIG on the controller and remove the 15 amp ATM fuse for the controller from the fuse block, located in the engine compartment.
12. Press the RESET button on the AVR to return to normal operation.
13. Go to *Compare AVR Bypass Test Results*.

Not for Reproduction

Compare AVR Bypass Test Results

1. Using the applicable table for your generator unit that follows, find the column (A-G) that matches the values you wrote down for steps 9 and 15 in the *Check AC Voltage* test and step 10 in *Check DC Amperage*. Replace the component indicated. Go back to *Check AC Voltage*.

NOTICE

Contact Briggs & Stratton Technical Support to receive prior authorization before installing a new rotor or stator.
It may be necessary, but not required, to replace the AVR when a new stator is installed.
< is "less than"; **>** is greater than"; **≥** is "greater than or equal to".

Bypass Test Values: 18-22 kW							
Scenario	**A**	**B**	**C**	**D**	**E**	**F**	**G**
Wires 2 and 6 (VAC)	≥ 100	≥ 100	< 100	Zero	< 100	<100	< 100
Wires 11A and 44A (VAC)	≥ 100	< 100	≥ 100	Zero	<100	<100	<100
DC Amperage (A)	*Amp Draw Not Required*	*Amp Draw Not Required*	*Amp Draw Not Required*	Zero or < 0.32	> 0.45	0.32-0.45	Zero
Replace	AVR	Stator	Stator	Rotor	Rotor	Stator	Rotor

Bypass Test Values: 26 kW							
Scenario	**A**	**B**	**C**	**D**	**E**	**F**	**G**
Wires 2 and 6 (VAC)	≥ 100	≥ 100	< 100	Zero	< 100	<100	< 100
Wires 11A and 44A (VAC)	≥ 100	< 100	≥ 100	Zero	<100	<100	<100
DC Amperage (A)	*Amp Draw Not Required*	*Amp Draw Not Required*	*Amp Draw Not Required*	Zero or < 1.0	> 1.25	1.0-1.25	Zero
Replace	AVR	Stator	Stator	Rotor	Rotor	Stator	Rotor

2. If any components were replaced, make sure all wires are reconnected [especially Wire 22 (Neutral) to the terminal block].
3. Press START on the controller. Is the generator producing the correct voltage?
   a. **Yes -** Go to *Section 4: Check the Frequency*.
   b. **No -** Return to *Test 14: Measure Circuit Breaker Load-Side Voltage*.

NOTICE

If you reach this point of the diagnostics twice, call Briggs & Stratton Technical Support for further instructions.

Not for Reproduction

Section 4: Check the Frequency

NOTICE
Wherever "Test again" appears, install the 15 amp ATM fuse for the controller in the fuse block, located in the engine compartment, if removed. From **Manual Mode** (Engine Off-Ready), press START/SELECT on the controller to start the engine, and then check for proper frequency. If the test fails, remove the 15 amp fuse and proceed to the next step. If the test passes, advance to *Section 5: Check the Switches*.

1. Press START/SELECT on the controller. Does the controller LCD indicate that the engine has the correct frequency?
   a. **Yes -** Go to *Section 5: Check Switches*.
   b. **No -** Go to *Test 20: Check the Frequency*.

WARNINGS ----------54
TEST 20: CHECK THE FREQUENCY ----------55
TEST 21: CHECK THE ELECTRONIC GOVERNOR ----------55

Not for Reproduction

Warnings

WARNING 

Rotating parts could entangle hands, hair, clothing, or accessories resulting in death or serious injury.

- NEVER operate generator without protective housings, covers, or guards in place.
- DO NOT wear loose clothing, jewelry or anything that could be caught in rotating parts.
- Before servicing, stop the generator and disconnect the negative (-) cable at the battery.

WARNING 

Contact with muffler area could cause burns resulting in serious injury.

- DO NOT touch hot parts and AVOID hot exhaust gases.
- Allow equipment to cool before touching.

Not for Reproduction

Test 20: Check the Frequency

NOTICE

General images are shown and may not match your unit.

1. Locate the generator circuit breaker and remove the control panel cover plate (if not already removed).
2. Install a 15 amp ATM fuse for the controller in the fuse block, located in the engine compartment.
3. Set the generator circuit breaker to the OFF (Open) position.
4. Push START/SELECT on the controller to start the engine.
5. Set the Digital Multimeter to read frequency (A, Figure 68). Connect one meter test lead (B) to L1 (C) and the other meter test lead (D) to to L2 (E) on the line side of the circuit breaker. Is 60 Hz present?
   a. **Yes -** Go to step 6.
   b. **No -** Go to *Test 21: Check the Electronic Governor*.

NOTICE

180 Hz is not possible. Check the meter or use a tiny tachometer to check engine RPMs.

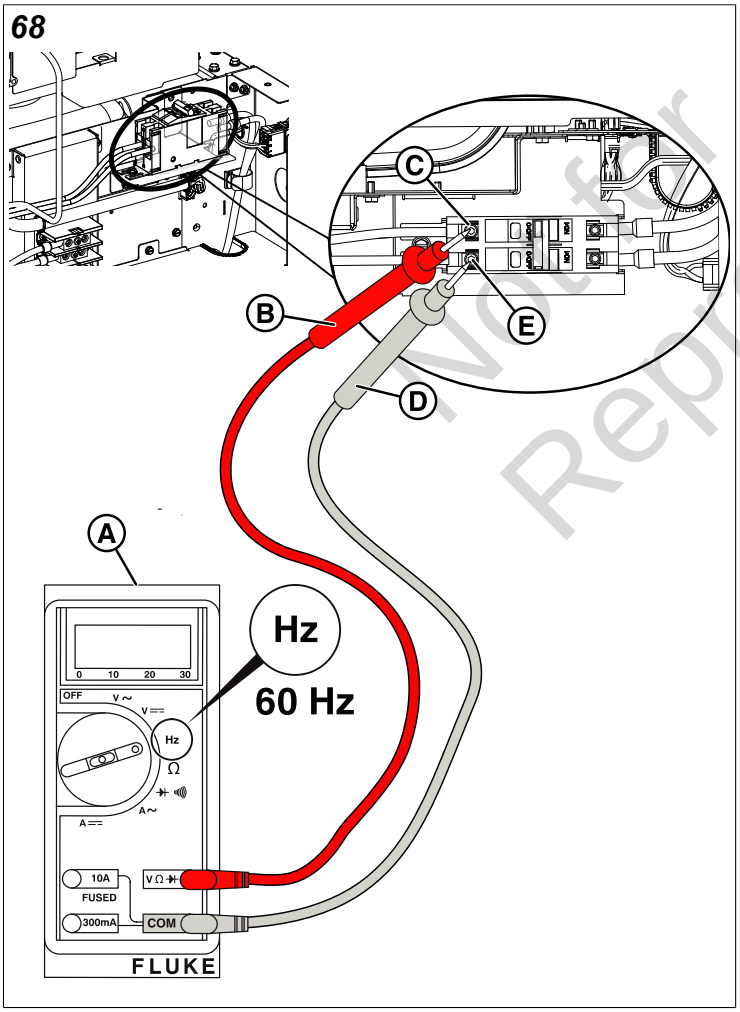

6. Obtain a Digital Tachometer and Hour Meter (B in *Specialty Tools*). Install as follows, looking for a 3600 RPM reading on the tachometer with the engine running:
   a. Insert the solder lug of the white wire under the engine or frame bolt for suitable ground.
   b. Tightly coil the red wire over an insulated section of the spark plug cable, using three to four turns. Go to step 7.

NOTICE

Keep wires away from hot or moving engine parts.

7. Back probe the socket terminals by connecting one meter test lead (A, Figure 69) to Terminal 29 (GENSET I/P Y, Wire 44C) (B) and the other meter test lead (C) to Terminal 30 (GENSET I/P R, Wire 11C) (D) at the back of the controller. Is 60 Hz present?
   a. **Yes -** Install a new controller. Test again.
   b. **No -** Repair or replace the wiring between the circuit breaker and the controller. Test again.

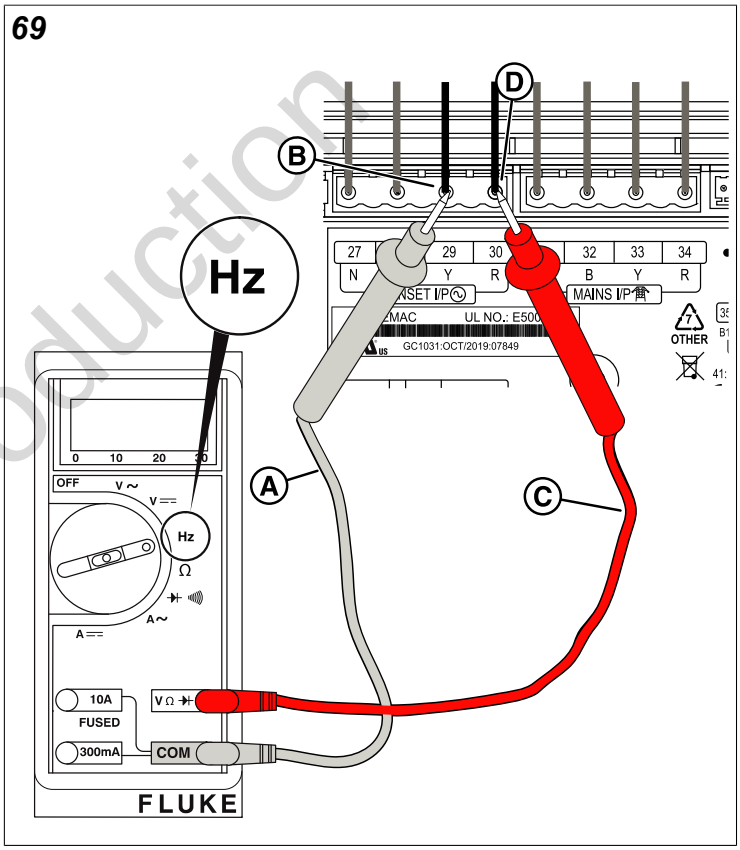

Test 21: Check the Electronic Governor

1. Install a 15 amp ATM fuse for the controller in the fuse block, located in the engine compartment.
2. Press STOP/CONFIG on the controller.

Not for Reproduction

3. Perform an actuator test (sweep test) by completing the following instructions:
    a. Press and hold the the STOP/CONFIG button for 3 seconds.
    b. Press START/SELECT to enter **Write Mode**.
    c. Enter your dealer password and press START/SELECT.
    d. Navigate to "ACTUATOR TEST" in the menu (14/14 on the menu) and press START/SELECT to confirm.
    e. "ACUTOR TEST (1/1)" will be displayed on the menu. Press START/SELECT to confirm.
    f. "ENABLE - NO" should be displayed on the screen. Press START/SELECT to make the "NO" start flashing.
    g. Using the up or down arrows, change the screen so that "ENABLE - YES" is displayed.
    h. Press START/SELECT until "ENABLE - YES" stops flashing.
    i. Press and hold STOP/CONFIG for 3 seconds until you see "SAVING SETTINGS..." displayed on the screen and the actuator test will begin.

NOTICE

If stepper motor does not move, make sure the stepper motor electrical connector is attached.

4. While performing the actuator test, does the stepper motor shaft move freely without sticking?
    a. **Yes -** Call Briggs & Stratton Technical Support for assistance.
    b. **No -** Inspect the stepper motor and linkages for any binding or interference with bulkhead engine components. Repair or replace as necessary. Go to step 5.
5. Disconnect the connector from the controller and set the Digital Multimeter to read ohms. Place one meter test lead on Terminal 1 (Wire 8 - Yellow) and the other on Terminal 2 (Wire 9 - Black). Is resistance around 40 ohms?
    a. **Yes -** Go to step 6.
    b. **No -** Repair or replace the wires between the stepper motor and controller. Disconnect the electronic governor from the controller and go to step 6.
6. Place one meter test lead on Terminal 3 (Wire 10 - Blue) and the other on Terminal 4 (Wire 12 - White). Is resistance around 40 ohms?
    a. **Yes -** Install a new controller. Test again. If you return to this point, go to step 7.
    b. **No -** Repair or replace the wires between the stepper motor and controller. Test again.
7. Can an engine idle speed of 3600 RPM be obtained?
    a. **Yes -** Go to *Section 6: Engine Troubleshooting*.
    b. **No -** See the appropriate Engine Service Manual.

NOTICE

If necessary, call Briggs & Stratton Technical Support for assistance.

Not for Reproduction

Section 5: Check the Switches

NOTICE
Wherever "Test again" appears, install the 15 amp ATM fuse for the controller in the fuse block, located in the engine compartment, if removed. From **Manual Mode** (Engine Off-Ready), press START/SELECT on the controller to check for a low oil pressure or high engine temperature condition. If the condition is still present, remove the 15 amp fuse and proceed to the next step. If the condition is correct, advance to *Section 6: Engine Troubleshooting*.

WARNINGS ---------- 58
TEST 22: CHECK FOR LOW OIL PRESSURE ---------- 59
Check Low Oil Pressure Switch for Short to Ground ---------- 59
Check Low Oil Pressure Switch for Continuity ---------- 59
Check Engine Oil Pressure ---------- 60
TEST 23: CHECK FOR HIGH ENGINE TEMPERATURE ---------- 60
Check Oil Temperature Switch for Short to Ground ---------- 61
Check Oil Temperature Switch for Continuity ---------- 62

Not for Reproduction

Warnings

WARNING 

Generator and utility voltage could cause electrical shock or burn resulting in death or serious injury.

- Installation must be performed by a licensed professional.
- Disconnect all sources of electricity before installing or servicing equipment.
- Ground system before applying power.

WARNING 

Propane and Natural Gas are extremely flammable and explosive, which could cause burns, fire or explosion resulting in death or serious injury.

- LP gas is heavier than air and will settle in low areas.
- Natural gas is lighter than air and will collect in high areas.
- The slightest spark could ignite these fuels and cause an explosion.
- DO NOT allow any open flame, spark, heat, or lit cigarette.

WARNING 

Rotating parts could entangle hands, hair, clothing, or accessories resulting in death or serious injury.

- NEVER operate generator without protective housings, covers, or guards in place.
- DO NOT wear loose clothing, jewelry or anything that could be caught in rotating parts.
- Before servicing, stop the generator and disconnect the negative (-) cable at the battery.

WARNING 

Contact with muffler area could cause burns resulting in serious injury.

- DO NOT touch hot parts and AVOID hot exhaust gases.
- Allow equipment to cool before touching.

Not for Reproduction

Test 22: Check For Low Oil Pressure

1. Press START/SELECT on the controller to start the engine. Let 10 seconds go by so the engine can pressurize. Is a low oil pressure condition indicated?
   a. **Yes -** Go to step 2.
   b. **No -** Go to *Test 23: Check for High Engine Temperature*.
2. Is the engine oil level low?
   a. **Yes -** Add oil until the level is at or near the top of the crosshatch pattern on the dipstick. Test again.
   b. **No -** Go to *Check Low Oil Pressure Switch for Short to Ground*.

Check Low Oil Pressure Switch for Short to Ground

NOTICE

The normally closed contacts of the switch are held open by engine oil pressure when the engine is running. If oil pressure drops below 7-10 psi, the contacts close to complete a circuit to ground on Wire 85, and the engine shuts down.

1. Press STOP/CONFIG on the controller.
2. Remove the 15 amp ATM fuse for the controller in the fuse block or set the Generator Emergency Shutdown switch to the OFF position.
3. Disconnect Wire 85 from the Low Oil Pressure switch.
4. Set the Digital Multimeter (A, Figure 70) to read continuity. Measure for short to ground by connecting one meter test lead (B) to Wire 85 (C) and the engine block and connecting the other meter test lead (D) to ground (E). Is short to ground present?
   a. **Yes -** Repair or replace wiring. Test again.
   b. **No -** Go to *Check Low Oil Pressure Switch for Continuity*.

70

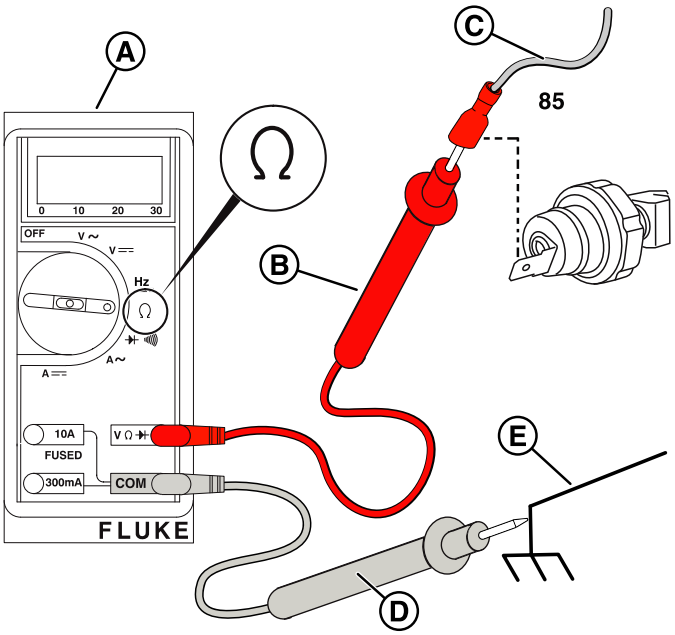

Check Low Oil Pressure Switch for Continuity

1. Disconnect Wire 85 from the Low Oil Pressure switch if installed.
2. Install the 15 amp ATM fuse for the controller in the fuse block, located in the engine compartment.
3. Press START/SELECT on the controller to start the engine and allow 10 seconds to elapse for the engine to pressurize.

Not for Reproduction

4. Set the Digital Multimeter (A, Figure 71) to read continuity. Check continuity to ground at the switch spade contact by connecting one meter test lead (B) to the engine block (C) and the other meter test lead (D) to ground (E). Is continuity to ground present?

NOTICE

The switch may be tested using a hand or vacuum pump or equivalent, applying either vacuum or pressure.

   a. **Yes -** The switch contacts are closed. Go to *Check Engine Oil Pressure*.

   b. **No -** The switch contacts are open. Install a new controller. Test again.

71

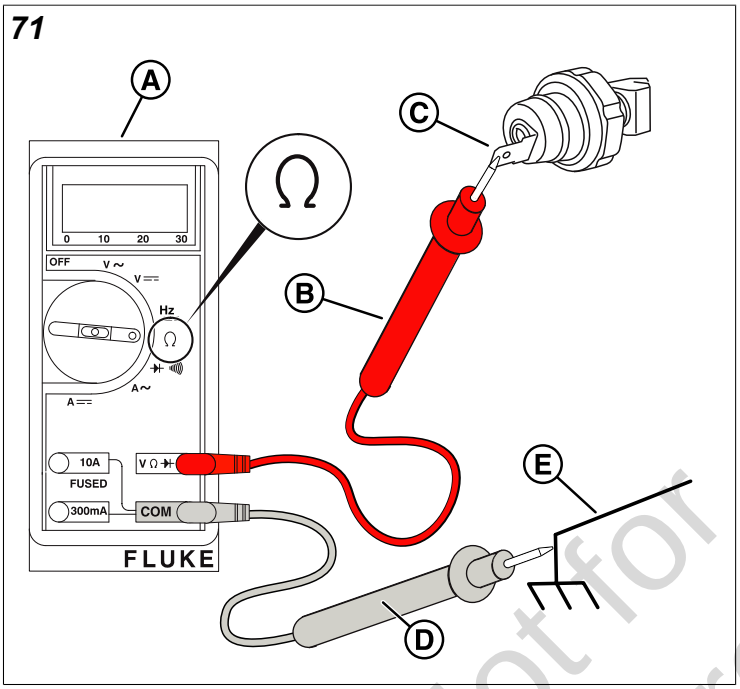

Check Engine Oil Pressure

1. Disconnect Wire 85 (A, Figure 72) from the Low Oil Pressure switch (B).
2. Remove the Low Oil Pressure switch and install a suitable oil pressure gauge.
3. Install the 15 amp ATM fuse for the controller in the fuse block, located in the engine compartment.
4. Press START/SELECT on the controller to start the engine.
5. Inspect the oil pressure gauge. Is it showing 10-50 PSI (0.7-3.5 Bar)?

   a. **Yes -** Install a new Low Oil Pressure switch. Test again.

   b. **No -** See the service manual for your engine.

NOTICE

If necessary, call Briggs & Stratton Technical Support for assistance.

72

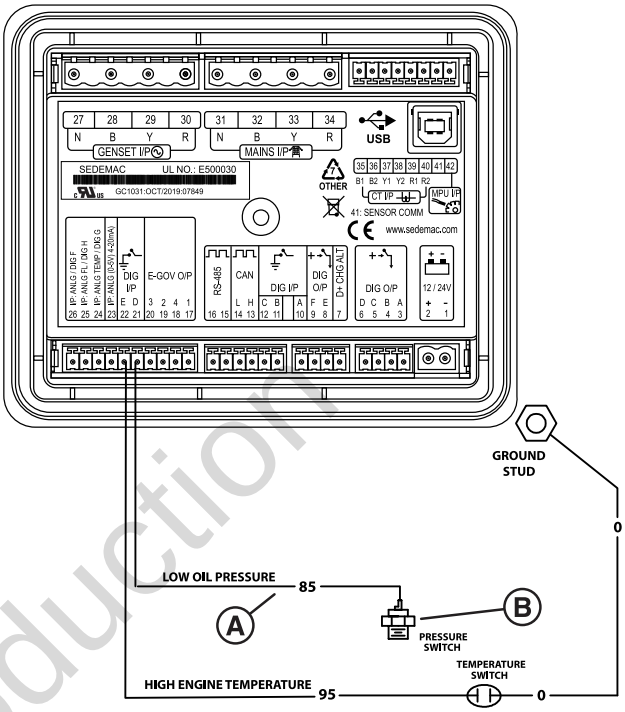

Test 23: Check for High Engine Temperature

1. Install a 15 amp ATM for the controller in the fuse block, located in the engine compartment, if removed.
2. Press START/SELECT on the controller to start the engine. Let the engine run for 5 minutes. Is a high engine temperature condition indicated?

   a. **Yes -** Go to step 3.

   b. **No -** Go to *Section 7: Final Checks*.

3. Check for these most common causes of high engine temperature: low engine oil level, obstructed air inlet, obstructed exhaust outlet, debris in the engine compartment, deteriorated foam seals, or the roof or side panels are not installed. Are any of these conditions observed?

   a. **Yes -** Correct as necessary. Test again.

   b. **No -** Go to *Check Oil Temperature Switch for Short to Ground*.

Not for Reproduction

Check Oil Temperature Switch for Short to Ground

NOTICE

The switch contacts are normally open. If the engine temperature goes above 300°F, +/- 7°F (149°C, +/- 4°C), the contacts close to complete a circuit to ground on Wire 95 and the engine will shut down.

1. Press STOP/CONFIG on the controller.
2. Remove the 15 amp ATM fuse for the controller in the fuse block or set the Generator Emergency Shutdown switch to the OFF position.
3. Disconnect the two-pin Deutsch connector from the Oil Temperature switch (A, Figure 73).

73

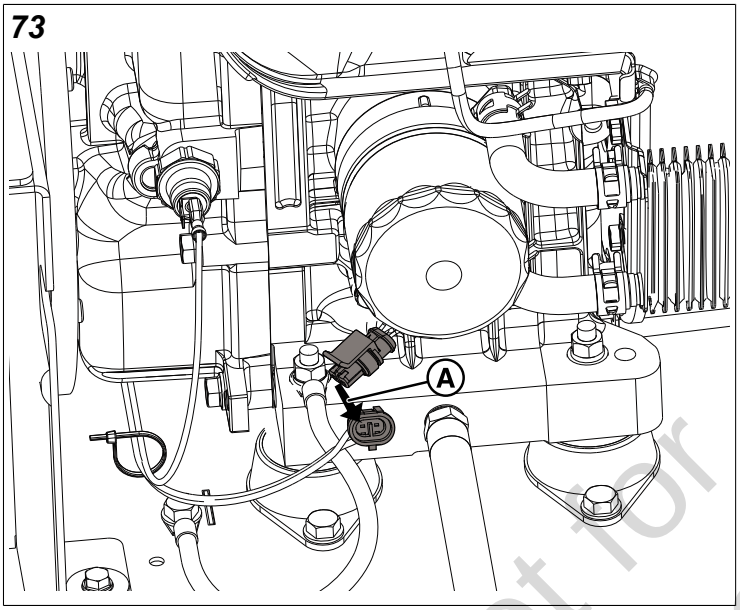

4. Set the Digital Multimeter (A, Figure 74) to read continuity and install "Fine Point Extended Needle" test leads. Measure for short to ground by connecting one meter test lead (B) to the Oil Temperature switch connector (Wire E-95) (C) and the other meter test lead (D) to ground (E). Is short to ground present?
   a. **Yes -** Repair or replace the wiring. Test again.
   b. **No -** Go to *Check Oil Temperature Switch for Continuity*.

74

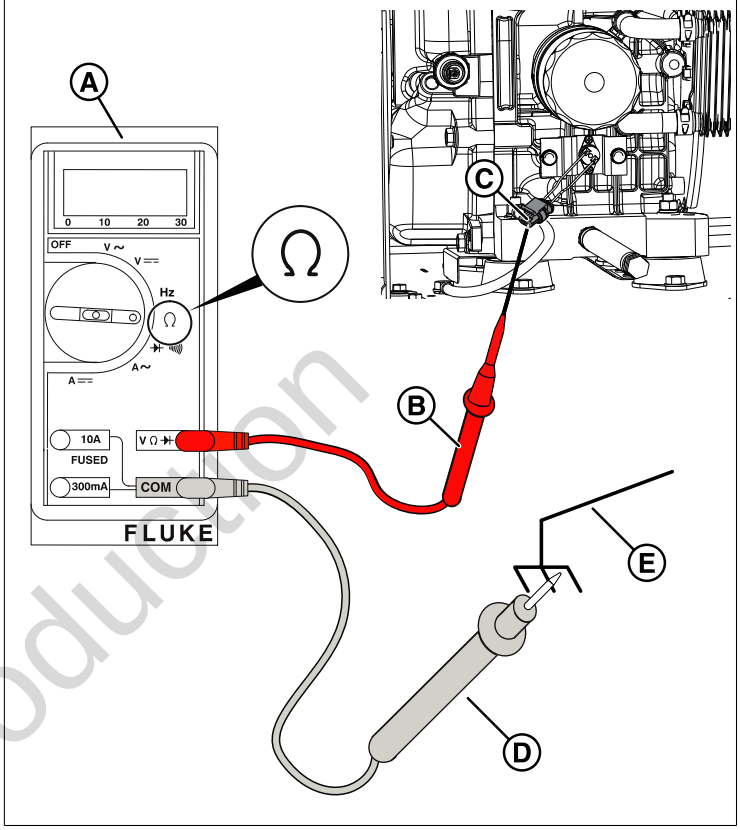

Not for Reproduction

Check Oil Temperature Switch for Continuity

1. Install a 15 amp ATM fuse for the controller in the fuse block, located in the engine compartment, if removed.
2. Press START/SELECT on the controller to start the engine.
3. Set the Digital Multimeter (A, Figure 75) to read continuity. With the engine cold or below normal operating temperature, check for continuity between terminals of the Oil Temperature switch by connecting one meter test lead (B) to one terminal of the switch (C) and the other meter test lead (D) to the other terminal of the switch (E). Is continuity present?
   a. **Yes -** Install a new Oil Temperature switch. Test again.
   b. **No -** Install a new controller. Test again.

75

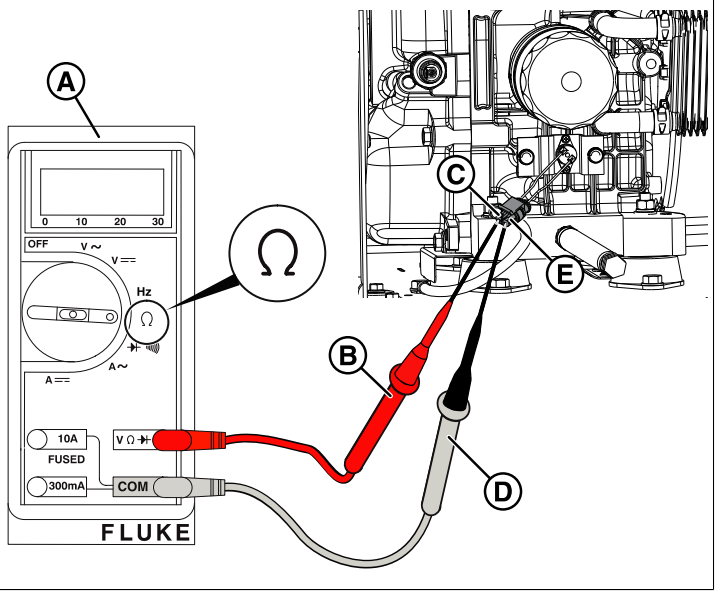

4. Go to *Section 6: Engine Troubleshooting*.

Not for Reproduction

Section 6: Engine Troubleshooting

WARNINGS ----------64
STARTER MOTOR SOLENOID CONTINUITY TEST ----------65
STARTER MOTOR SOLENOID VOLTAGE TEST (WITH LOAD AND CURRENT DRAW TEST) ---------- 65
CHECK ENGINE PERFORMANCE ----------67
CHECK CYLINDER BALANCE ---------- 67
CHECK CRANKCASE VACUUM ----------67

Not for Reproduction

Warnings

WARNING 

Generator and utility voltage could cause electrical shock or burn resulting in death or serious injury.

- Installation must be performed by a licensed professional.
- Disconnect all sources of electricity before installing or servicing equipment.
- Ground system before applying power.

WARNING 

Propane and Natural Gas are extremely flammable and explosive, which could cause burns, fire or explosion resulting in death or serious injury.

- LP gas is heavier than air and will settle in low areas.
- Natural gas is lighter than air and will collect in high areas.
- The slightest spark could ignite these fuels and cause an explosion.
- DO NOT allow any open flame, spark, heat, or lit cigarette.

WARNING 

Rotating parts could entangle hands, hair, clothing, or accessories resulting in death or serious injury.

- NEVER operate generator without protective housings, covers, or guards in place.
- DO NOT wear loose clothing, jewelry or anything that could be caught in rotating parts.
- Before servicing, stop the generator and disconnect the negative (-) cable at the battery.

WARNING 

Contact with muffler area could cause burns resulting in serious injury.

- DO NOT touch hot parts and AVOID hot exhaust gases.
- Allow equipment to cool before touching.

Not for Reproduction

Starter Motor Solenoid Continuity Test

The starter solenoid is a normally open, electrically activated switch. With the Generator Emergency Shutdown switch in the ON position and the controller in **Manual Mode**, when you press the START/SELECT button, the switch closes, allowing battery current to flow to the starter motor and crank the engine.

The solenoid may be tested while mounted on engine.

1. Remove the negative (-) battery cable from the battery first, then remove the positive (+) battery cable from the battery.
2. Remove the battery cable from the stud terminal on the starter solenoid.
3. Disconnect Wire E-56C from the Control Circuit terminal (C, Figure 76) on the solenoid.
4. Make sure that the Generator Emergency Shutdown switch is set to the OFF position.
5. Set the Digital Multimeter to read ohms.
6. Connect one meter test lead to each stud terminal (A and B, Figure 76) on the solenoid.
7. Attach one end of jumper lead to the positive (+) terminal on the battery.
8. Attach the other end of the jumper lead to the Control Circuit terminal (C, Figure 76) on the solenoid.

76

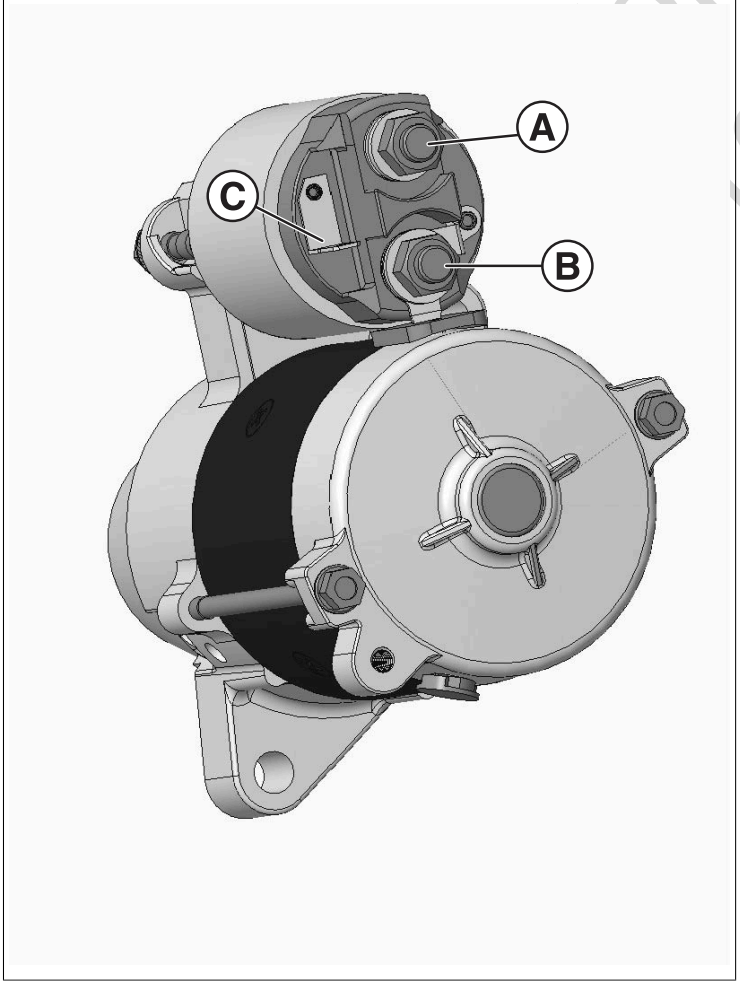

9. Is an audible "click" heard as the solenoid switch closes and does the Digital Multimeter show "OL" (OPEN)?
   a. **Yes -** Replace the starter solenoid.
   b. **No -** Go to *Starter Motor Solenoid Voltage Test (With Load and Current Draw Test).*

Starter Motor Solenoid Voltage Test (With Load and Current Draw Test)

Prior to conducting this test, make sure the battery is fully charged, in good condition, with battery cables connected.

1. To begin testing the starter motor solenoid input or feed voltage, set the Digital Multimeter (A, Figure 77) to read DC Volts. Connect the red meter test lead (B) to the post of the starter solenoid (Wire 13Y) (C) and connect the black meter test lead (D) to ground (E). Is the battery voltage from Wire 13Y equal to or greater than 9.6 VDC?
   a. **Yes -** Go to step 2.
   b. **No -** Repair or replace the wiring and/or connections between the battery and the starter. Test again.

77

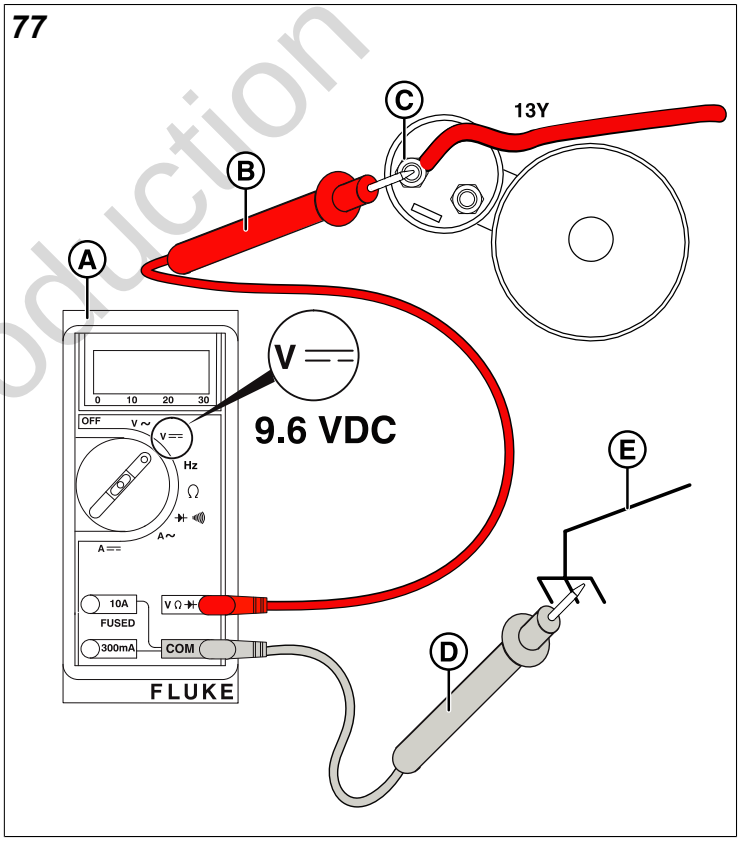

Production

2. Disconnect the control wire E-56C (A, Figure 78) from the spade contact at the starter solenoid (B). Connect the positive (+) meter test lead (C) to the control wire (A), and connect the negative (-) meter test lead (D) to ground (E).

78

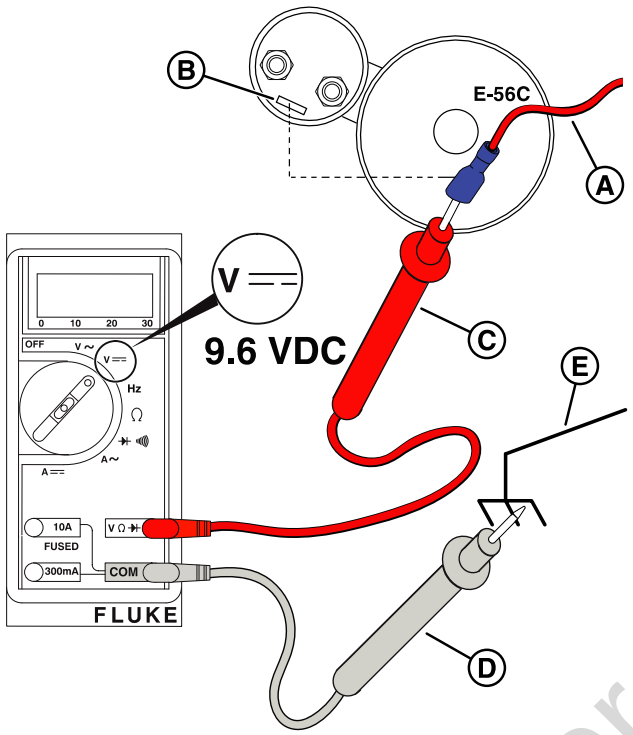

3. Install a 15 amp ATM fuse in the fuse block.
4. Set the Generator Emergency Shutdown Switch to the ON position.
5. Press START/SELECT on the controller to crank the engine.
6. Is DC voltage on the control wire at the starter solenoid equal to or greater than 9.6 VDC?
   a. **Yes -** Check that the engine spins freely and is not locked up. If the engine spins freely, install a new starter. Test again.
   b. **No -** Go to step 7.
7. To begin testing the solenoid output voltage, disconnect both ignition wires from the spark plugs.

NOTICE
Turn fuel supply off if still on.

8. Connect the red meter test lead (A, Figure 79) to the other post of the starter solenoid (B) and connect the black meter test lead (C) to ground (D).

79

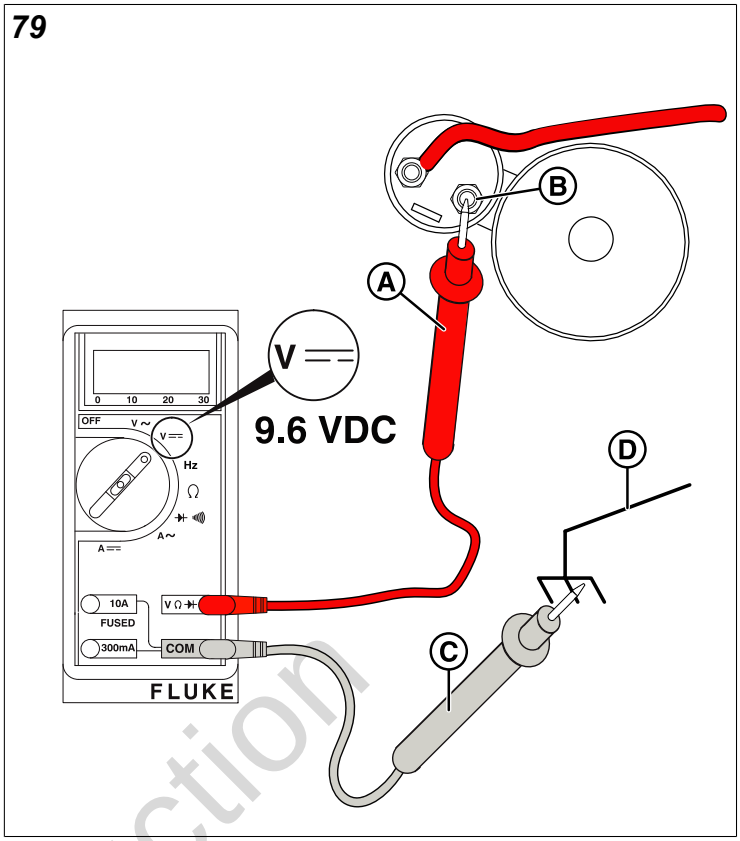

9. Make sure that the Generator Emergency Shutdown switch is set to the ON position.
10. From **Manual Mode** on the controller, press START/SELECT to crank the engine. Is battery voltage from the post of the starter solenoid to the starter motor equal to or greater than 9.6 VDC?
    a. **Yes -** Motor is faulty. Replace starter motor.
    b. **No, engine not cranking -** Solenoid is faulty. Replace starter solenoid.
    c. **No, engine cranking slowly -** Go to step 11.
11. Using a clamp meter, set to DC Amps, clamp the battery positive (+) cable.
12. Press START/SELECT to crank the engine. While the engine is cranking, is around 100 Amps present?
    a. **Yes -** Go to *Check Engine Performance*.
    b. **No -** Replace starter motor. Test again.

Not for Reproduction

Check Engine Performance

1. Run the engine and observe its performance. Is the engine running smoothly?
   a. **Yes -** Go to *Check Cylinder Balance*.
   b. **No -** Refer to the appropriate Engine Service Manual.

Check Cylinder Balance

1. Get two Ignition Testers (D in *Specialty Tools*).
2. Remove the spark plug cables from the spark plug terminals.

NOTICE
Pull on the boot at the terminal end of the cable. Do not pull on the cable, as it can cause damage.

3. Install the free end of the spark plug cables (A, Figure 80) onto the inline tester prongs (B). Install the tester alligator clips onto the spark plug terminals (C).

WARNING
Make sure there is no fuel or fuel vapors present, which, if spark ignited, can cause a fire or explosion resulting in death or serious injury.

4. Get a Digital Tachometer and Hour Meter (B in *Specialty Tools*) (D, Figure 80) and install it on one side of the engine as follows:
   a. Insert solder lug of the white wire (E) under the engine or the frame bolt (F) for a suitable ground connection.
   b. Tightly coil the red wire (G) over an insulated section of the spark plug cable (H) three to four times.

NOTICE
Keep wires away from hot or moving engine parts.

5. Get a screwdriver with an insulated handle (J, Figure 80) and a jumper wire with an alligator clip on both ends (K).
6. On the side of the engine opposite the tachometer, attach a jumper wire (K, Figure 80) to the shank of the screwdriver (J) and to the engine lifting eye (L) or another suitable ground.
7. Press START/SELECT on the controller to start the engine.
8. Check the tachometer and **write down** the engine RPM with both cylinders functioning.
9. Touch the offset prong on the ignition tester with the end of the screwdriver to the ground out cylinder (A, Figure 80).
10. Check the tachometer and **write down** the engine RPM with only one cylinder functioning.
11. Press STOP/CONFIG on the controller.
12. Remove the tachometer (D, Figure 80) and the jumper wire (K).
13. Repeat steps 4-12 on the second cylinder.

80

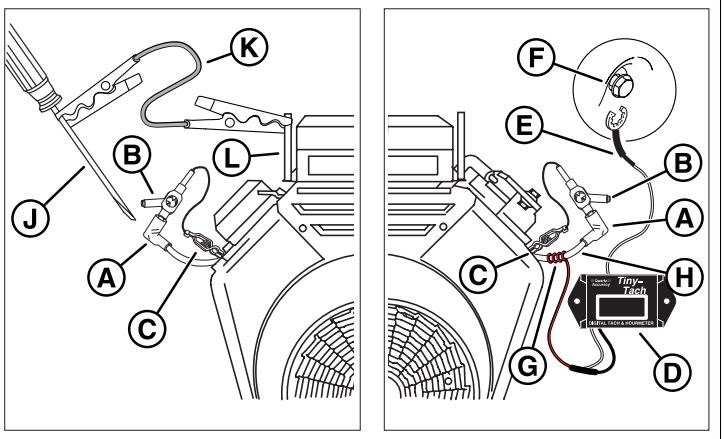

14. Compare the test results. After an initial drop, did each cylinder get back up to 3600 RPM?

NOTICE
There should not be more than a 75-RPM difference between each cylinder.

   a. **Yes -** The cylinders are doing an equivalent amount of work. The engine function is satisfactory.
   b. **No -** The cylinder with the low RPM is not doing what it should. See the appropriate Engine Service Manual.

NOTICE
If necessary, call Briggs & Stratton Technical Support for assistance.

Check Crankcase Vacuum

1. Obtain a digital vacuum gauge.
2. Remove the dipstick.
3. Insert the vacuum gauge tube into the dipstick tube.

NOTICE
The vacuum gauge tube must fit tightly.

4. Activate the vacuum gauge.
5. Press START/SELECT on the controller to start the engine.
6. Is the vacuum gauge showing -5 to -10 inches WC?
   a. **Yes -** Go to *Section 7: Final Checks*.
   b. **No -** See the service manual for your engine.

NOTICE
If necessary, call Briggs & Stratton Technical Support for assistance.

Not for Reproduction

This page is intentionally left blank.

Not for Reproduction

Section 7: Final Checks

Complete the *Final Checks* and fill in the *General Information* table for your records.

Final Checks
Battery
Is the battery properly connected?
Was the battery load tested?
Was the battery dated and changed at the proper intervals?
Are the battery cables clean and tight?
Is the battery electrolyte level/specific gravity satisfactory?
Is the battery charger charging?
Fuel
Is sufficient fuel available in the fuel supply tank?
Are the main fuel supply valve and any in-line fuel shutoff valves open?
Is the proper fuel type selected?
Is there any evidence of fuel leakage?
Is the flexible steel fuel line in good condition?
Electrical Controls
Is the generator main circuit breaker set to the ON (Closed) position?
Does the automatic transfer switch operate correctly when manually exercised?
Are the transfer switch fuse(s) installed?
Is the generator controller set to AUTO?
Physical
Is the engine oil level correct?
Is the air filter element clean?
Are all the air inlets and outlets free of obstruction?
Are the spark plugs in good condition with the correct gap?
Are all electrical connections clean and tight?
Are all hose clamps tight?
Is there any evidence of oil leakage?
Is the generator clean and in good condition without obvious damage?
Is the generator assembly intact with no missing parts?
Are all guards/heat shield/air deflectors installed?
Are vibration isolators in satisfactory condition?
Are all major fasteners tight?
Is the interior of the generator clean and dry?
Are important warning labels affixed and readable?
Are the engine block heater(s) installed and operational?
Security
Are the roof and controller doors securely locked?
Load Test
Has a load test been performed with satisfactory results?

Not for Reproduction

General Information
Equipment Information
Generator
Manufacturer:
Model Number:
Serial Number:
Size/Rating (kW):
Voltage/Phase:
Fuel Type:
Running Hours:
Engine
Model Number:
Serial Number:
Transfer Switch
Model:
Serial Number:
Owner Information
End User/Owner:
Address:
City, State, and Zip Code:
On-Site Contact Information:
Phone Number:
Email Address:
Service Information
Service Technician:
Title:
Date:
Problem(s) Found:
Repair(s) Performed:

Not for Reproduction

Section 8: Service Tools Software and Electronics

THE BRIGGS & STRATTON POWER PORTAL ---------- 72
Technician Accounts ---------- 72
SMARTFLASH ---------- 72
ENERGYTRAK PROGRAMMER ---------- 72
COMPONENT DESCRIPTIONS ---------- 72
GC-1030 Series ---------- 72
Smart AVR2 ---------- 76

Not for Reproduction

The Briggs & Stratton Power Portal

The Briggs & Stratton Power Portal (ThePowerPortal.com) is a secure, password-protected website created in partnership with Briggs & Stratton dealers, distributors, suppliers, and customers. This online resource provides access to products and engine parts, as well as warranty, educational, and account information.

Technician Accounts

Technician accounts are created and managed under the Power Portal primary account (DDM #). These accounts are well suited for technicians or salespersons needing access to the following items:

- Interactive web-based parts lookup for all brands (illustrator parts lists).
- Technical support documentation, including installation and operation manuals, service bulletins, and repair manuals.
- Annual maintenance checklists for air-cooled and liquid-cooled standby generators.

NOTICE

Technician accounts are not able to place orders or file warranties, but do have access to the tools necessary to support customers.

SmartFlash

The Briggs & Stratton GC1030 series GENSET Controller, is compatible with the multiple PowerProtect, Fortress, and Briggs & Stratton air-cooled standby generators. There are multiple iterations and firmware updates since it was first launched using the SmartFlash service tool.

The following items are necessary for utilizing the SmartFlash tool:

- GC1030 series GENSET Controller (e.g. GC-1031/1032/1032R/1033)
- USB 2.0 standard B-type cable (also known as a USB Printer Cable)
- Windows-based PC or Laptop (NO tablets, smartphones, or Apple OS).

After installing the SmartFlash software click the "Download From Server" button to download the firmware to your PC, using the security code 1031.

From the SmartFlash tool, technicians can update GC-1030 Series controllers using a USB-B connection. Refer to the PowerPortal.com "Software & Firmware" section for additional information.

EnergyTrak Programmer

The EnergyTrak application can be used to remotely monitor and control a fleet of generators. EnergyTrak is pre-installed on PowerProtect+ standby generators and and can be tested with the EnergyTrak app. The EnergyTrak app is required for setup and activation, which can be completed independently after installation.

From the EnergyTrak menu, technicians can use the EnergyTrak web application to update certain electronics (i.e. Standard Controller, SmartAVR, and SmartAVR2) using a USB-B connection. Refer to the PowerPortal.com "Software & Firmware" section for additional information.

NOTICE

For additional information and support on the EnergyTrak App visit https://docs.energytrak.io. Navigate to the app store on a mobile device, app.energytrak.io, or scan the QR code to download the Briggs & Stratton EnergyTrak app. Once the app has been downloaded, you will be able to create an EnergyTrak Account to begin monitoring this and additional EnergyTrak sites.

For registration and activation support, call the EnergyTrak support team at 1-833-463-6482.

Component Descriptions

GC-1030 Series

From the CONFIGURATION menu, various configurable parameters are displayed in the page levels. To access the CONFIGURATION menu and view or change the configuration, complete the following steps:

1. Press and hold the STOP/CONFIG button for 3 seconds to access the CONFIGURATION menu.
2. To change the configuration, press START/SELECT.

NOTICE

If you want to only view the existing configuration, press STOP/CONFIG again.

3. The controller will ask for a 4-digit password. To enter each digit, use the up and down arrows to navigate to the digit and press START/SELECT to confirm. The 4 digits will start blinking individually as you select each one.
4. After entering the password, use the up and down arrows and START/SELECT button to navigate through the CONFIGURATION menu pages.
5. After completing any parameter configurations, press and hold STOP/SELECT to exit the CONFIGURATION menu. Before exiting, the controller will display "Saving Settings...".

Refer to the Configuration Tables that follow to quickly interpret and navigate the page menus. Each row represents a specific CONFIGURATION page level (as indicated in the manual), and some page listings were removed where both user permissions were read only.

Not for Reproduction

This page is intentionally left blank.

Not for Reproduction

CONFIGURATION PAGE / PARAMETERS	**Description / Reason for parameter change**	**Page #/#**	**Permissions**	
			All 0-0-0-0	**Technician** 1-2-3-4
MODULE	GC-1030 Series Controller settings	1/14		
- GENERAL		1/5		
LOAD HISTOGRAM	Statistical display of time at load percentage	3/5	Write	Write
WARNING AUTO CLEAR	Warning clears if item is corrected	4/5	Write	Write
LANGUAGE	Display language	5/5	Write	Write
- DISPLAY		2/5		
CONTRAST	Screen brightness (visible at 55-100%)	1/2	Write	Write
POWER SAVE MODE	Enable or Disable power save mode (dims backlight)	2/2	Write	Write
- COMMUNICATION		3/5		
COMM MODE	Not used on air-cooled standby generators	1/4	Write	Write
- AUTO EXERCISE	Generator exercise settings	4/5		
EXER OPTN	Enable or Disable generator exercise	1/6	Write	Write
EXER CYCLE	Six, (6) configured run times (ADD TIMES???)	2/6	Write	Write
EXER EVENT OCCR	Occurrence of exercise	3/6	Write	Write
EXER EVENT DAY	Day of Week or day of the Month (based on prior selection)	4/6	Write	Write
EXER START TIME	Time of day to run exercise	5/6	Write	Write
EXER SKIP ENABLE	Abort **[Yes]** or Run **[No]** exercise under 40F	6/6	Write	Write
- 45 MIN BURN OFF	Bi-annual (2x/year) 45 minute extended run	5/5		
45 MIN BURN OFF	Enable or Disable configured settings	1/7	Write	Write
EVENT MONTH 1	Post-Winter Months (Northern Hemisphere) or Skip run	2/7	Write	Write
EVENT DAY 1	##	3/7	Write	Write
EVENT START TIME 1	Time of day to run exercise	4/7	Write	Write
EVENT MONTH 2	Pre-Winter Months (Northern Hemisphere) or Skip run	5/7	Write	Write
EVENT DAY 2	##	6/7	Write	Write
EVENT START TIME 2	Time of day to run exercise	7/7	Write	Write
INPUTS		2/14		
- DIG IN A	User configured input(s)	1/9	Read	Write
- DIG IN B		2/9	Read	Write
OUTPUTS		3/14	Read only	
TIMERS		4/14		
- CRANKING TIMER		1/2	Read only	
- GENERAL TIMER		2/2		
MAINS DETECT DELAY	Time delay before controller reads utility is restored	2/14	Read	Write
WARM UP DELAY	Engine warm-up timer	4/14	Write	Write
RETN-TO-MAINS DELAY	Time delay for re-transfer back to utility	5/14	Read	Write
ENG COOL TIME	Time for engine to cool down	6/14	Read	Read
LOAD TRANSFER DELAY	Time delay for transfer to generator	9/14	Read	Write
PWR SAVE MODE DELAY	Time delay for entering power save mode	10/14	Write	Write
SOUNDER ALARM TIME	Not accessible	12/14	Read	Write
AUTO EXIT CNFG TMR	Time delay for screen timeout	13/14	Read	Write
LIM TRANSFER DELAY	Time delay for for RS485 message to signal the transfer	14/14	Read	Write

CONFIGURATION PAGE / PARAMETERS	**Description / Reason for parameter change**	**Page #/#**	**Permissions**	
			All 0-0-0-0	**Technician** 1-2-3-4
GENERATOR		5/14	Read only	
MAINS		6/14		
- MAINS CONFIG	MAINS = Utility	1/5		
MAINS MONITORING	Enable (i.e. AMF) or Disable (i.e. 2-wire start)	1/2	Read	Write
MAINS AC SYSTEM	Display language	2/2	Read	Read
- UNDER VOLT MON		2/5		
ENABLE	Enable (Default) or Disable “Under-voltage Monitoring”	1/3	Read	Write
TRIP	Factory default TRIP under-voltage	2/3	Read	Write
RETURN	Factory default RETURN under-voltage	3/3	Read	Write
- OVER VOLT MON	Same options (ENABLE, TRIP, RETURN), adjusted values	3/5	Read	Write
- UNDER FREQ MON	Same options (ENABLE, TRIP, RETURN), adjusted values	4/5	Read	Write
- OVER FREQ MON	Same options (ENABLE, TRIP, RETURN), adjusted values	5/5	Read	Write
ENGINE		7/14	Read only	
MAINTENANCE		8/14		
- MAINT ALARM	Notification only vs. Warning (prevents generator from starting, if not currently running)	1/2		
ACTION	Enable or Disable Maintenance Alarm	1/1 or 1/2	Read	Write
DUE AT ENGINE HOURS	Not used on air-cooled standby generators	1/4	Read	Write
- ALARM DUE DATE		2/2	Read	Write
ROTARY ACTUATOR		9/14	Read only	
MISC SETTINGS		10/14		
- PASSWORD 1	Manufacturer level	1/3	Read	Write
- PASSWORD 2	Dealer/ Technician level	2/3	Read	Write
- PASSWORD 3	All (Customer) / General level	3/3	Read	Write
RESET COUNTERS		11/14		
- GENSET		1/1		
NO OF STARTS	Number of engine starts	1/2	Read	Write
NO OF TRIPS	Number of faults recorded	2/2	Read	Write
SELECT PROFILE		12/14		
- SELECT PROFILE	Select the generator’s kW and fuel type	1/1		
PROFILE NAME	Ex: 22KW_LP, 26KW_NG	1/1	Read	Write
DATE AND TIME		13/14		
- DATE		1/2		
## MON YEAR	Configure the current date	1/1	Read	Write
- TIME		2/2		
TIME	Configure the current time	1/1	Read	Write
ACTUATOR TEST		14/14		
- ACTUATOR TEST	Stepper Motor ‘sweep’ test	1/2		
ENABLE	Enable [Yes] or Disable [No] sweep test, setting resets after the test is completed	1/1 or 1/2	Read	Write
TEST DURATION	Timed duration of sweep test, shown only if test is enabled	2/2	Read	Write

Smart AVR2

NOTICE

Connectors are hidden for clarity.

81

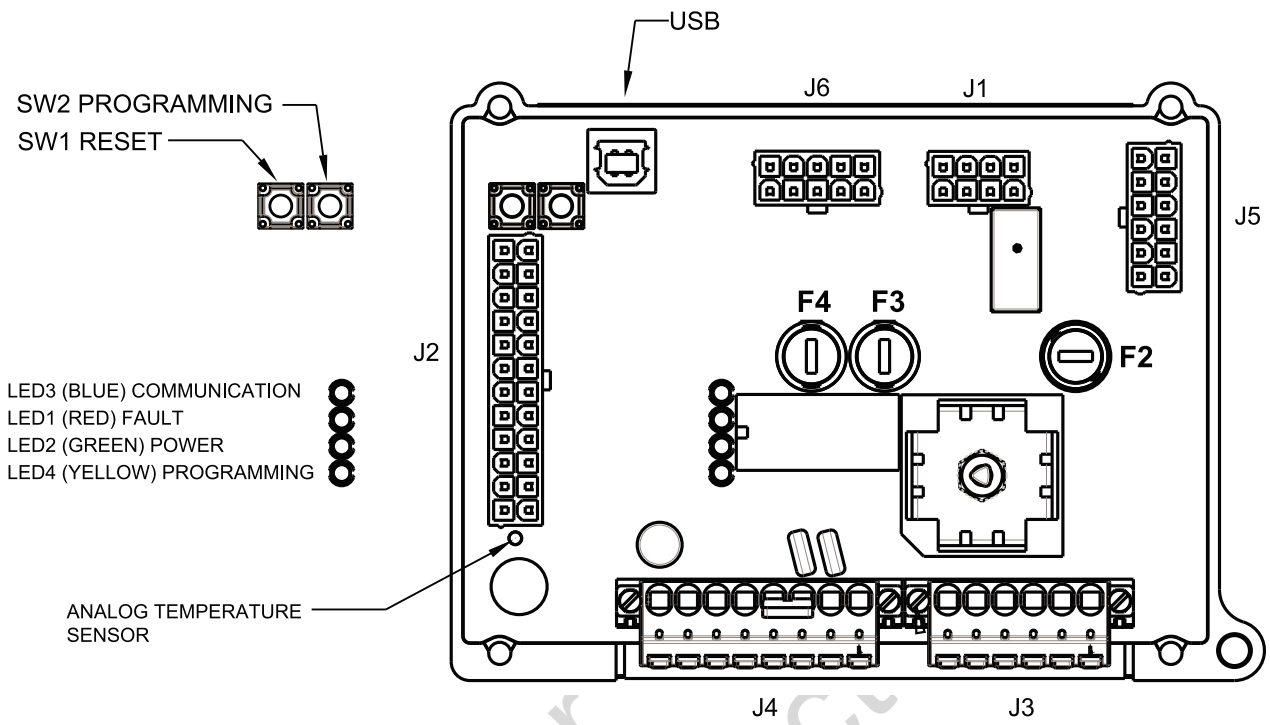

AVR Fuse Information		
Fuse	Description	Protected Wire
F2	DPE	G-6
F3	Battery Charger L2	17
F4	Battery Charger L1	16

AVR LED Operation		
Identifier	Color	Function
LED1	Red	Fault Indicator: Solid = AVR fault. OFF = No faults.
LED2	Green	Power Indicator: Solid = AVR is powered on and not regulating. 1.0s Blinking (Engine Running) = AVR is powered on and regulating. 1.0s Blinking (Engine Not Running) = Rotor test is active. OFF = No power to AVR or firmware not running.
LED3	Blue	Communication: 0.5s Blinking = Communication is present. OFF = No communication to controller.
LED4	Yellow	Programming Mode: Solid = In programming mode. OFF = Not in programming mode.

Not for Reproduction

AVR Connector/Item Identification	
J1	Alternator
J2	Generator Controller
J3	Customer
J4	Customer
J5	IOT (EnergyTrak)
J6	Controller High Voltage
USB	USB-B Voltage
SW1	RESET Button
SW2	PROGRAMMING/TEST Button Pressed = PROGRAMMING MODE (Blue/Green LEDs alternating flashing and Yellow LED solid) Unpress = NORMAL MODE
LEDs	See *Reference LED Operation* table for more information

J1 Connector Pin Identification				
Pin	Label	Wire #	Voltage	Circuit & Description
1	L1	G-11A	120 VAC	Input: Stator Power Winding sensing wire.
2	L2	G-44A	120 VAC	Input: Stator Power Winding sensing wire.
3	N	G-22A	N/A	Input: Alternator Neutral reference.
4	EMPTY	N/A	N/A	Not connected.
5	RTR NEG	G-1	Variable DC Negative	Output: Variable DC circuit from the AVR to the rotor.
6	DPE1	G-2	Variable AC	Input: Stator Excitation Winding circuit (AC power supply to AVR).
7	DPE2	G-6	Variable AC	Input: Stator Excitation Winding circuit (AC power supply to AVR).
8	RTR POS	G-4	Variable DC Positive	Output: Variable DC circuit from the AVR to the rotor (to positive brush holder).

J2 Connector Pin Identification				
Pin	Label	Wire #	Voltage	Circuit & Description
1	BAT NEG	0C	GND	Input: Battery Supply ground.
2	EMPTY	N/A	N/A	Not connected.
3	FUEL OUT	14B	+12 VDC	Output: 12 VDC to fuel solenoid.
4	TEMP	57	Variable DC Positive	Input: Ambient Temperature Sensor.
5	CTRL POS	13D	+12 VDC	Output: 12 VDC positive to controller.
6	E-STOP	100C	+12 VDC	Input: Emergency Stop.
7	CTRL NEG	0B	GND	Output: 12 VDC negative to controller.
8	485 POS	111	DC Positive	Communication: RS-485 MODBUS positive (Symphony Choice Power Management)
9	485 NEG	112	DC Negative	Communication: RS-485 MODBUS negative (Symphony Choice Power Management)
10	FAULT	59	+12 VDC	Input: Voltage to EnergyTrak for fault condition.

Not for Reproduction

J2 Connector Pin Identification				
11	PM	60	+12 VDC	Output: Voltage to TRCM+ (transfer switch) for power management (AA/BB).
12	2 WIRE	101	+12 VDC	Input: 2-Wire start (from customer connection terminals), passthrough for input to controller.
13	SW POS	13G	+12 VDC	Output: Voltage to Generator Emergency Shutoff switch for Status LED.
14	EMPTY	N/A	N/A	Not connected.
15	STRT OUT	56B	+12 VDC	Output: Starter motor signal.
16	BAT POS	13B	+12 VDC	Input: From 15 amp ATM controller fuse.
17	STRT IN	56A	+12 VDC	Input: From controller for crank circuit.
18	FUEL IN	14A	+12 VDC	Input: From controller for run circuit.
19	EMPTY	N/A	N/A	Not connected.
20	CAN-H	113	DC High	Communication: CANBUS High, communication to controller.
21	CAN-L	114	DC Low	Communication: CANBUS Low, communication to controller.
22	FLM OUT	54	N/A	N/A (signal to ground ignition coils).
23	LP/NG	55	+5 VDC	Output: NG profile, output to ignition coils.
24	XFER	99	+12 VDC	Output: To transfer switch forcing transfer.

J3, J4, and J5 Connector Pin Identification				
Pin	Label	Wire #	Voltage	Circuit & Description
1-6	Various	N/A	Various	See your generator's installation and operation manual.
7-12 & 25-26	Various	N/A	Various	See your generator's installation and operation manual.
1-12	Various	N/A	Various	EnergyTrak.

J6 Connector Pin Identification				
Pin	Label	Wire #	Voltage	Circuit & Description
1	CLD WTHR L1	91B	120 VAC	Output: To cold weather accessory.
2	CTRL U L1	91A	120 VAC	Output: Utility to controller.
3	CTRL G N	22D	N/A	Input: Generator Neutral reference.
4	BAT CHRG L1	16	120 VAC	Output: To battery charger (utility or generator power).
5	CTRL G L1	11C	120 VAC	Output: To controller, power winding sensing for generator power.
6	CLD WTHR L2	94B	120 VAC	Output: To cold weather accessory.
7	CTRL U L2	94A	120 VAC	Output: Utility to controller.
8	CTRL U N	92A	N/A	Input: Utility Neutral reference.

Not for Reproduction

J6 Connector Pin Identification				
9	BAT CHRG L2	17	120 VAC	Output: To battery charger (utility or generator power).
10	CTRL G L2	44C	120 VAC	Output: To controller, power winding sensing for generator power.

Not for Reproduction

This page is intentionally left blank.

Not for Reproduction

Section 9: Removal and Installation

NOTICE
Before removal and replacement of components, proceed as follows:

- Push and hold STOP/CONFIG on the controller.
- Remove the 15 amp ATM fuse for the controller from the fuse block, located in the engine compartment.

WARNINGS ---- 82
ACCESS PANELS AND COMPONENT LOCATION ---- 83
Unit Access Panels ---- 83
Unit Features and Controls ---- 84
COMPONENT REMOVAL AND INSTALLATION ---- 87
Air Filter ---- 87
Automatic Voltage Regulator (AVR) ---- 87
Battery ---- 87
Battery Charger ---- 88
Circuit Breaker ---- 88
Controller ---- 89
Fuel Pressure Regulator ---- 90
High Engine Temperature Switch ---- 90
Low Oil Pressure Switch ---- 90
Engine Oil Filter, Dipstick, and Drain Hose ---- 90
Starter and Starter Solenoid ---- 91
Starter Relay ---- 91
Stepper Motor and Linkages ---- 91
Alternator (Stator and Rotor) ---- 92

Not for Reproduction

Warnings

WARNING 

Battery electrolyte fluid contains acid and is extremely caustic. Contact with battery contents could cause severe chemical burns.

- DO NOT open or mutilate the battery.
- Wear protective goggles, rubber apron, rubber boots and rubber gloves.
- Immediately wash electrolyte from skin with water.
- If electrolyte contacts eyes, immediately flush with water and seek medical attention.
- Spilled electrolyte is to be washed down with an acid neutralizing agent.
- A common practice is to use a solution of one pound (500 grams) bicarbonate of soda to one gallon (4 liters) of water. The bicarbonate of soda solution is to be added until the evidence of reaction (foaming) has ceased. The resulting liquid is to be flushed with water and the area dried.

WARNING 

Storage batteries give off explosive hydrogen gas during recharging. Slightest spark could ignite hydrogen and cause explosion, resulting in death or serious injury.

- DO NOT dispose of battery in a fire. Recycle battery.
- DO NOT allow any open flame, spark, heat, or lit cigarette during and for several minutes after charging a battery.
- Discharge static electricity from body before touching batteries by first touching a grounded metal surface.

WARNING 

Generator and utility voltage could cause electrical shock or burn resulting in death or serious injury.

- Installation must be performed by a licensed professional.
- Disconnect all sources of electricity before installing or servicing equipment.
- Ground system before applying power.

WARNING 

Propane and Natural Gas are extremely flammable and explosive, which could cause burns, fire or explosion resulting in death or serious injury.

- LP gas is heavier than air and will settle in low areas.
- Natural gas is lighter than air and will collect in high areas.
- The slightest spark could ignite these fuels and cause an explosion.
- DO NOT allow any open flame, spark, heat, or lit cigarette.

WARNING 

Rotating parts could entangle hands, hair, clothing, or accessories resulting in death or serious injury.

- NEVER operate generator without protective housings, covers, or guards in place.
- DO NOT wear loose clothing, jewelry or anything that could be caught in rotating parts.
- Before servicing, stop the generator and disconnect the negative (-) cable at the battery.

WARNING 

Contact with muffler area could cause burns resulting in serious injury.

- DO NOT touch hot parts and AVOID hot exhaust gases.
- Allow equipment to cool before touching.

Not for Reproduction

Access Panels and Component Location

Unit Access Panels

The generator enclosure has several access panels. The access panels and the components located behind them are referenced in the lists and images that follow (Figure 82):

- (A) Roof (controller, air filter, oil dipstick, and circuit breaker)
- (B) Front Panel (oil drain, oil filter, battery)
- (C) End Cap, Air Inlet Side of Enclosure (control box wiring cover, fuel regulator, fuel selector, generator data label)
- (D) End Cap, Exhaust Outlet Side of Enclosure (alternator fan)
- (E) Back Panel (engine starter, starter relay)
- (F) Control Box Wiring Cover (field wiring, control wiring)

Each generator is shipped with a set of identical keys fastened to one of the end caps.

82

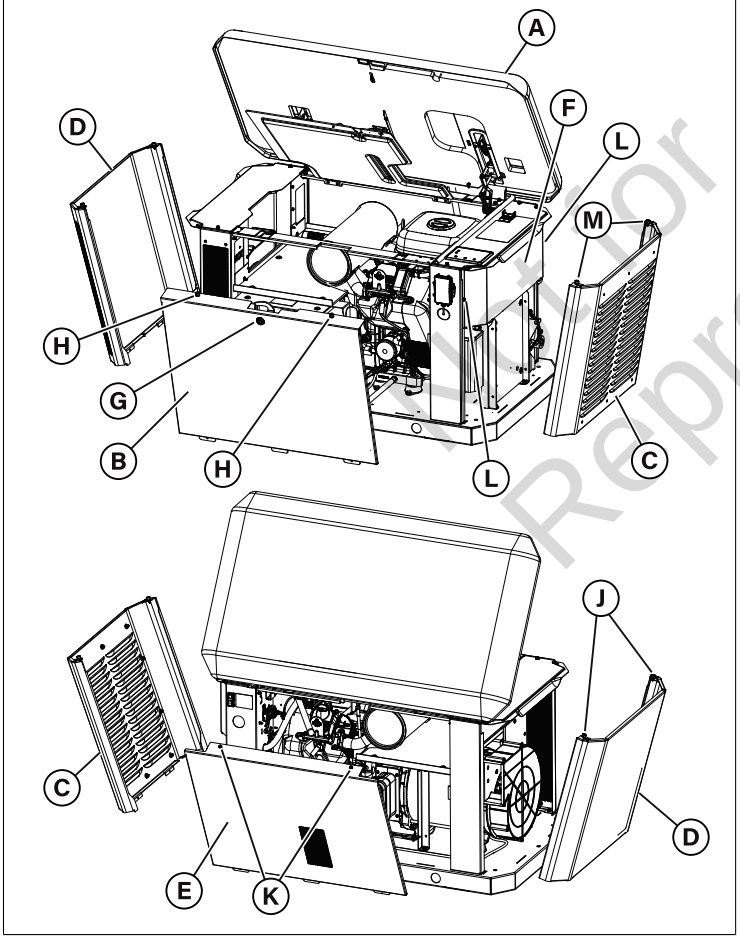

Open the roof (A, Figure 82):

1. Insert the key into the lock (G) of the front panel (B). Gently push down on the roof above the lock to assist in turning the key. Turn the key one-quarter turn clockwise.
2. Lift the roof (A) to the OPEN position. Make sure that the roof (A) is in the open position during any panel removal or attachment.

Remove the front panel (B):

1. Loosen the two self-retaining fasteners (H) that secure the front panel (B) to the unit.
2. Lift the front panel (B) to remove it from the unit.

Remove the air inlet side end cap (C):

1. Loosen the two self-retaining fasteners (M) that secure the end cap (C) to the unit.
2. Lift the end cap (C) to remove it from the unit.

Remove exhaust outlet side end cap (D):

1. Loosen the two self-retaining fasteners (J) that secure the end cap (D) to the unit.
2. Lift the end cap (D) to remove it from the unit.

Remove the back panel (E):

1. Using a Phillips head screw driver, loosen two self-retaining fasteners (K) that secure the back panel (E) to the unit.
2. Using a standard blade screw driver, gently lift the back panel (E) lip off of the back rail.
3. Tip the back panel (E) back under the roof (A).
4. Move to the back of the unit and lift the back panel (E) off.

Remove the control box wiring cover (F):

1. Remove two fasteners (L) that secure the control box wiring cover (F) to the control box.
2. Remove the control box wiring cover (F) to access field and control wiring.

Not for Reproduction

Unit Features and Controls

Generator Front View (Figure 83)

83

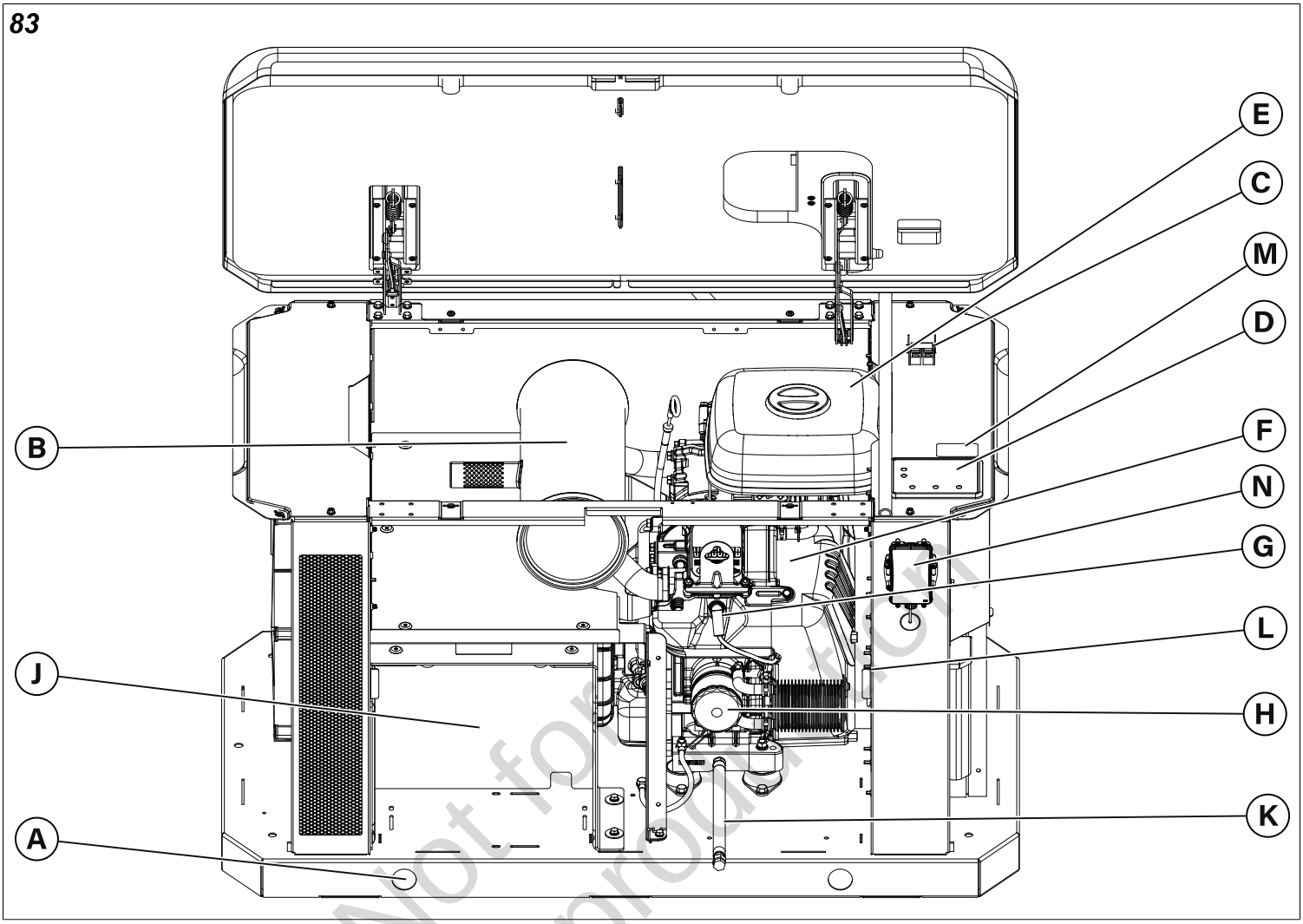

Not for Reproduction

- (A) Lifting Holes — Provided at each corner for lifting generator.
- (B) Muffler — High-performance muffler lowers engine noise to comply with most residential codes.
- (C) Circuit Breaker — Protects the system from shorts and other over-current conditions.
- (D) Controller — Facilitates for generator operation control, menu start-up, and informational display functions.
- (E) Air Cleaner — Uses a dry-type filter element to protect engine by filtering dust and debris out of intake air.
- (F) Engine Label — Identifies engine model and type (located on the blower housing).
- (G) Spark Plug — A device in the cylinder head of the engine that ignites the fuel mixture by means of an electric spark.
- (H) Oil Filter — Filters engine oil to prolong generator life.
- (J) Battery (installer supplied) — 12 VDC, lead acid, automotive-style battery provides power to start the engine.
- (K) Oil Drain Hose — Facilitates oil changing.
- (L) Generator Data Label — Identifies the generator model number and serial number. Located inside the battery access compartment.
- (M) QR Code Decal — Scan the QR code to register the generator for warranty coverage, access relevant documentation, as well as access basic system operation and troubleshooting instructions.
- (N) EnergyTrak™ Universal — Generator monitoring device used in with the EnergyTrak web or mobile application.

Generator Back View (Figure 84)

84

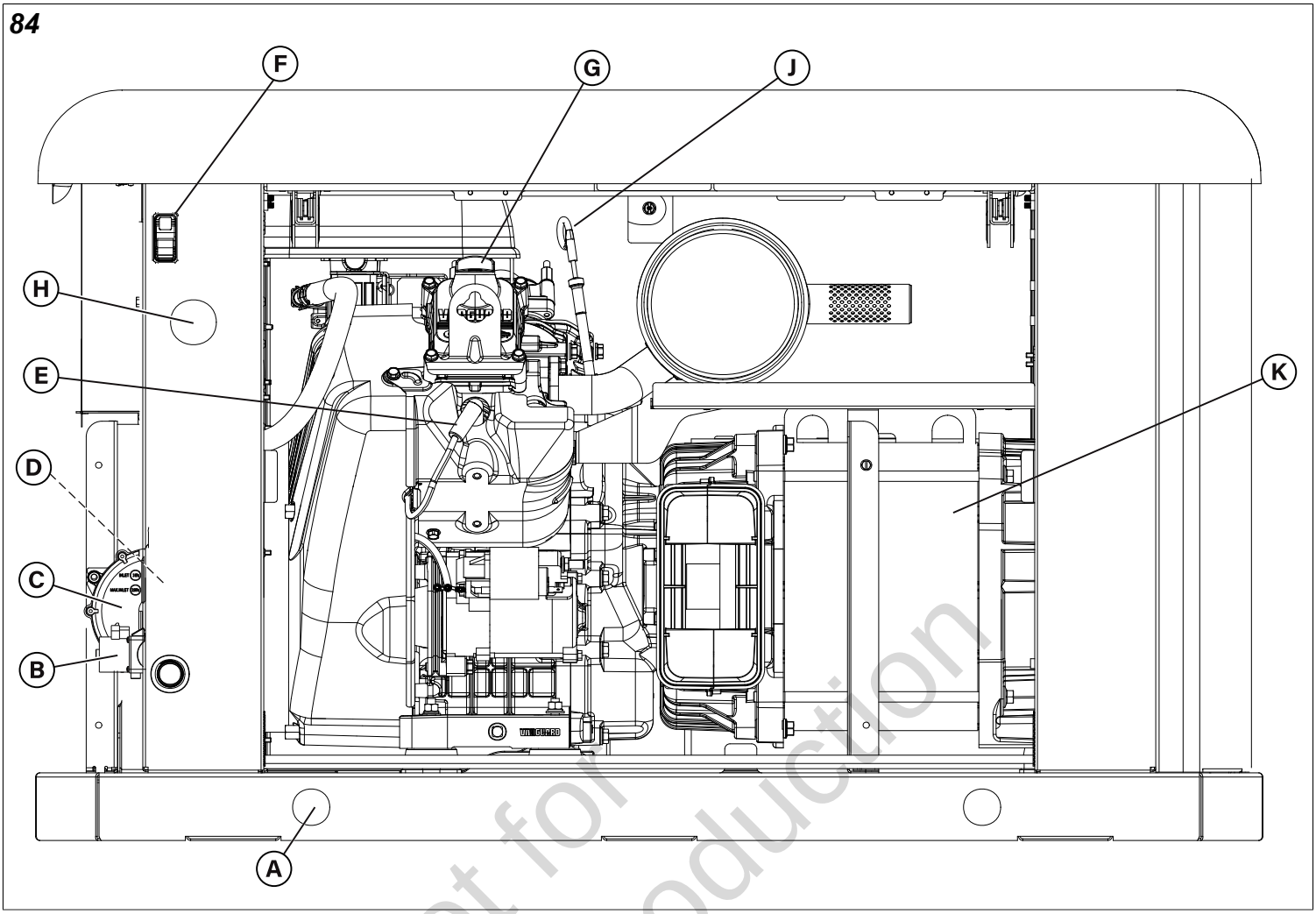

Not for Reproduction

- (A) Lifting Holes — Provided at each corner for lifting generator.
- (B) Fuel Solenoid — Automatically opens and closes to supply fuel to the unit when needed.
- (C) Fuel Regulator — Controls fuel flow to the engine for proper operation.
- (D) Fuel Selector Valve (Located on fuel regulator, hidden behind the panel in the figure) — Aids in selecting the proper fuel type (LP or NG).
- (E) Spark Plug — A device in the cylinder head of the engine that ignites the fuel mixture by means of an electric spark.
- (F) Generator Emergency Shutdown Switch and Generator Status LED — Aids in turning the generator on (I) and off (0). Generator Status LED meanings are listed below:
    - Steady light (**Auto Mode**): The generator is fully functional, whether it is currently running or not.
    - Blinking light (Fault condition): Indicates a fault. Light blinks 1 second on and 1 second off until condition is cleared.
    - No light: 12 VDC at generator controller is not present (i.e., a dead battery) or controller is set to OFF or **Manual Mode**.
- (G) Oil Fill Cap — The location for adding oil to the engine.
- (H) Electrical Field Wiring Inlet — Wires to and from the generator are centered in this location.
- (J) Engine Oil Dipstick — Allows the user to check the engine oil level easily.
- (K) Alternator — An electrical machine that generates an alternating current.

Generator Side View (Figure 85)

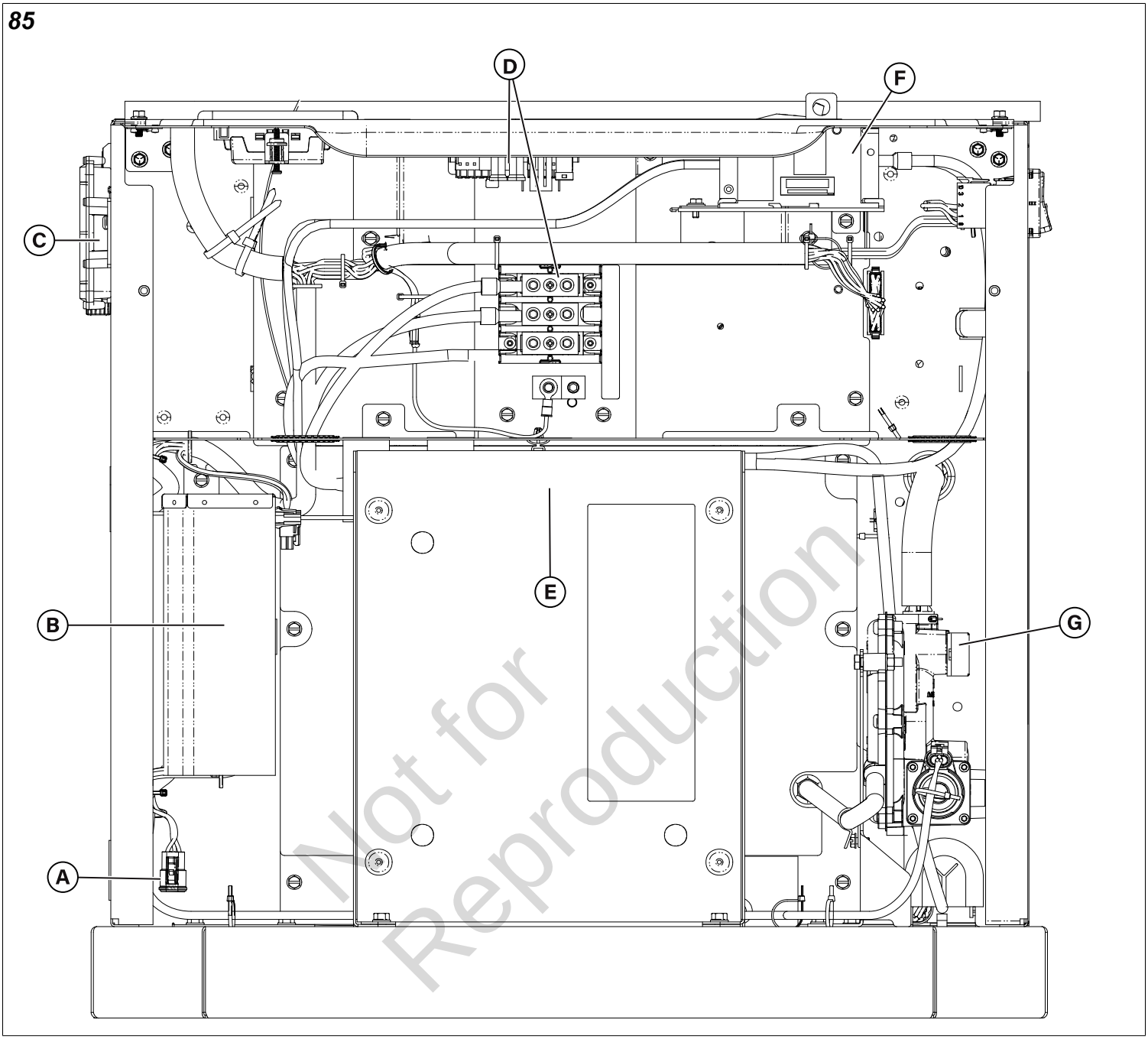

- (A) Accessory Kit Connection Point
- (B) Battery Charger (and cover)
- (C) EnergyTrak Monitoring System
- (D) AVR and Electrical Field Connections
- (E) Current Transformers (CTs) location behind panel
- (F) Circuit Breaker
- (G) Fuel Regulator Assembly, including Fuel Solenoid and Fuel Selector Valve

Component Removal and Installation

Air Filter

Removal

1. Remove the plastic knob to release the air filter cover.
2. Remove thumb nut from threaded rod.
3. Remove the metal retainer plate.
4. Remove and discard the air filter element.
5. Thoroughly clean the air filter mount\ metal retainer plate, and air filter cover of any dust, dirt, or debris.

Installation

1. Put a new air filter element onto the air filter mount.
2. Fit the metal retainer plate evenly and tightly into the air filter element.
3. Install the thumb nut onto the threaded rod and tighten until tight.
4. Install the air filter cover.
5. Install the plastic knob to secure the air filter cover.

86

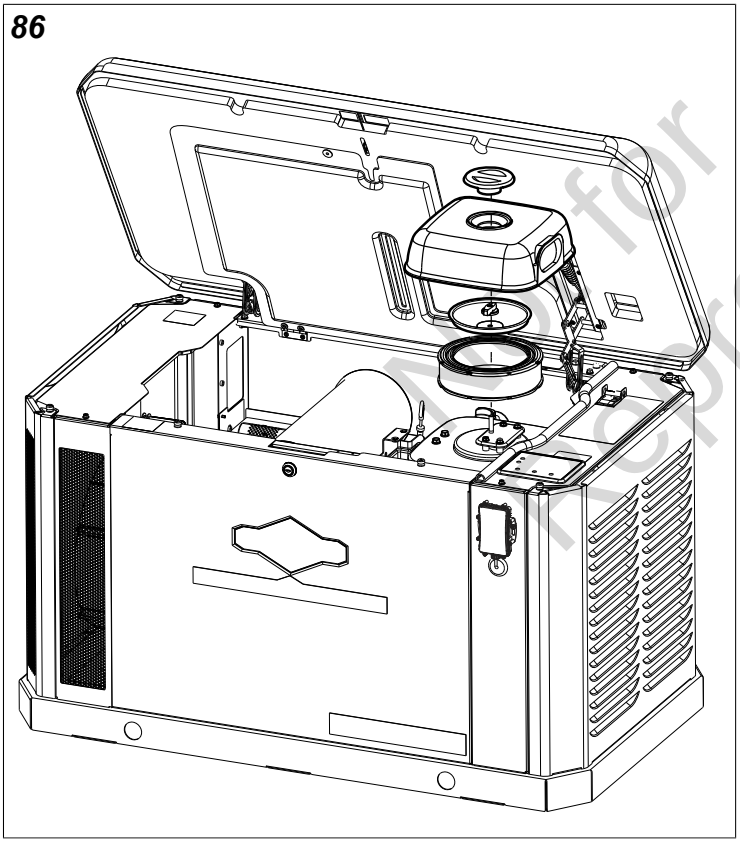

Automatic Voltage Regulator (AVR)

Removal

1. Locate the AVR (Figure 87) behind the controller.
2. Remove the screws to release the generator controller plate.
3. Disconnect each of the connectors (J1, J2, J5, and J6) on the AVR.
4. Remove the AVR from the standoffs. Discard the AVR in accordance to local codes.

Installation

NOTICE

The latest firmware must be loaded during the installation process. Refer to *Section 8: Software Service Tools Software and Electronics* for additional instructions.

1. Place a new AVR onto the standoffs.
2. Connect the J1, J2, J5, and J6 connectors on the AVR.

87

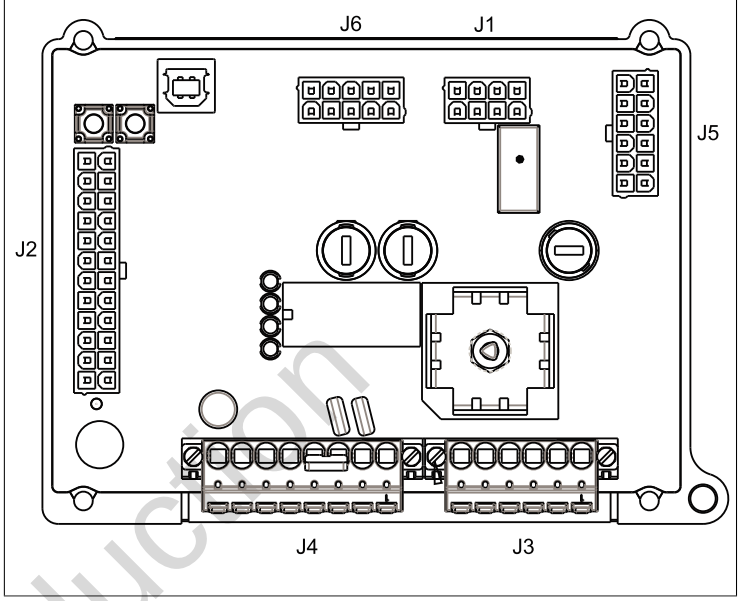

Battery

Removal

1. Remove the negative battery cable (black) from the negative battery (-) terminal.

CAUTION

Disconnect the negative battery cable first. If the positive cable should contact ground with the negative cable installed, the resulting sparks may cause a battery explosion, which could result in serious injury.

2. Remove the positive battery cable (red) from the positive battery (+) terminal.
3. Attach the battery strap and remove the battery from the battery compartment.

Installation

1. Attach the battery strap and install the new battery into the battery compartment.

Not for Reproduction

2. Install the positive battery cable (red) to the positive battery (+) terminal.

NOTICE

Verify that Wire E-13Z is correctly installed.

CAUTION

Connect the positive battery cable first. If the positive cable should contact ground with the negative cable installed, the resulting sparks can cause a battery explosion, which could result in serious injury.

3. Install the negative battery cable (black) to the negative battery (-) terminal.

NOTICE

Verify that Wire E-0Z is correctly installed.

NOTICE

Dispose of the used battery at an appropriate waste disposal or recycling center.

Battery Charger

WARNING

Remove fuse(s) from the transfer switch before removing for installing connections at the back of the controller. Utility voltage is present at the controller with the transfer switch fuses installed. Contact with utility voltage can result in death or serious injury.

Removal

1. Remove all fuses from the transfer switch (see your transfer switch's installation and operator's manual for the fuse location).
2. Remove the negative battery cable (black) from the negative battery (-) terminal at the battery.
3. Locate the battery charger.
4. Loosen the screw and remove the gray outer cover from the battery charger, if equipped.
5. Disconnect the G-L1-L2 connector (Wires 0B, 16, and 17).
6. Disconnect the +/- connector (Wires 0J and 13C).
7. Remove the screws that secure the battery charger.
8. Discard the battery charger in accordance with local codes.

Installation

1. Install the screws to secure the battery charger to the generator.
2. Connect the G-L1-L2 connector (Wires 0B, 16, and 17).
3. Connect the +/- connector (Wires 0J and 13C).
4. Install the gray outer cover on the battery charger, if equipped, and tighten the cover mounting screw.
5. Install the negative battery cable (black) to the negative battery (-) terminal at the battery.
6. Install fuse(s) in the transfer switch.

NOTICE

Make sure the battery charger is operating correctly by following the instructions in *Test 3: Check Trickle Charge at the Battery* in *Section 1: Engine Does Not Crank*.

88

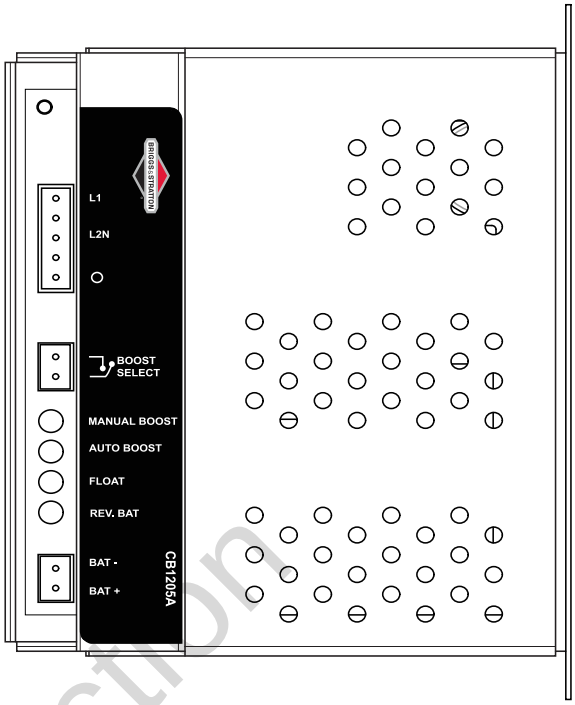

Circuit Breaker

Removal

1. Remove the screws to release the control panel cover.
2. Loosen the terminal screws and remove all wires from the circuit breaker terminal blocks.
3. At the same time, depress the rear tabs on the bracket to release the circuit breaker. Discard the circuit breaker.

Installation

1. Cycle the switch of a new circuit breaker to make sure it is operating correctly.
2. Locate Wire 11 (A, Figure 89) and fully insert wire into the line side L1 terminal block (B).
3. Locate Wire 44 (C, Figure 89) and fully insert both wire into the line side L2 terminal block (C).
4. Tighten each terminal screw to 40-50 in-lbs (5-6 Nm). Carefully pull on the wires to make sure that they are fully secured.
5. Insert wires fully into the load side L1 and L2 terminal blocks. Tighten the terminal screws to 40-50 in-lbs (5-6 Nm).
6. Press down on the circuit breaker to connect the rear tabs (E, Figure 89) on the bracket and/or reinstall the breaker hold down bracket.

Not for Reproduction

7. Install the screws to connect the cover to the control box. Alternately tighten the screws to 15-25 in-lbs (2-3 Nm).

89

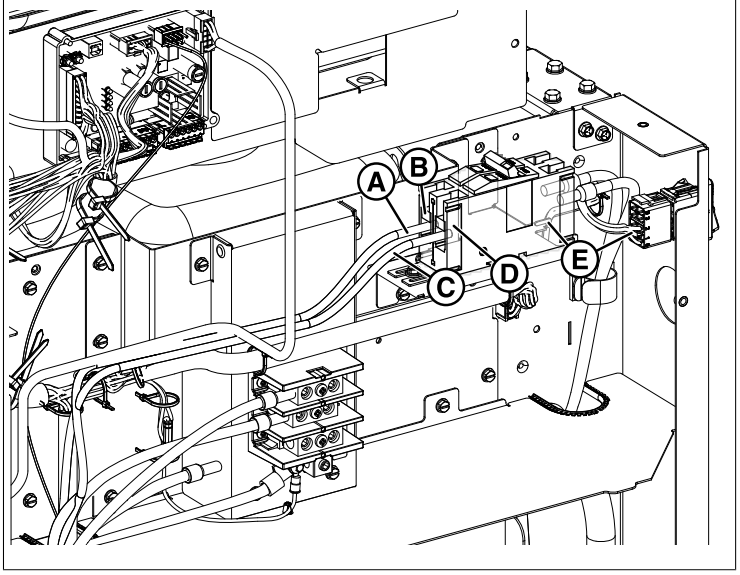

Controller

WARNING

Remove fuse(s) from the transfer switch before removing for installing connections at the back of the controller. Utility voltage is present at the controller with the transfer switch fuses installed. Contact with utility voltage can result in death or serious injury.

Removal

1. Remove all fuses from the transfer switch (see your transfer switch's installation and operator's manual for the fuse location).
2. Remove the screws to release the controller from the control box.
3. Disconnect all 8 wire terminal connectors from the back of the controller (Figure 90).
4. Discard the controller in accordance with local codes.

Installation

NOTICE

The latest firmware must be loaded during the installation process. Refer to *Section 8: Software Service Tools Software and Electronics* for additional instructions.

1. Obtain a new controller.
2. Connect the GENSET I/P terminal connector (A, Figure 90), which includes Wires 22C, 44C, and 11C.
3. Connect the MAINS I/P terminal connector (B, Figure 90), which includes Wires 92A, 91A, and 94A.
4. Connect the CT I/P and MPU I/P terminal connector (C, Figure 90), which includes Wires 20, 21, 18, 19, 0F, and 7.
5. Connect the ANLG, DIG I/P, and E-GOV O/P terminal connector (D, Figure 90), which includes Wires 100C, 57, 95, 85, 12, 10, 9, and 8.
6. Connect the RS485, CAN, and DIG I/P terminal connector (E, Figure 90), which includes Wires 112, 111, 114, 113, and 101.
7. Connect the DIG I/P, DIG O/P, and D+ CHG ALT terminal connector (F, Figure 90), which includes Wires 60 and 58.
8. Connect the DIG O/P terminal connector (G, Figure 90), which includes Wires 59, 14A, 56A, and 99.
9. Connect the 12/24V terminal connector (H, Figure 90), which includes Wires 13D and 0B.
10. Slide the controller into place and install the screws. One at a time, tighten the screws in a crosswise pattern until tight.
11. Install fuse(s) in the transfer switch.

90

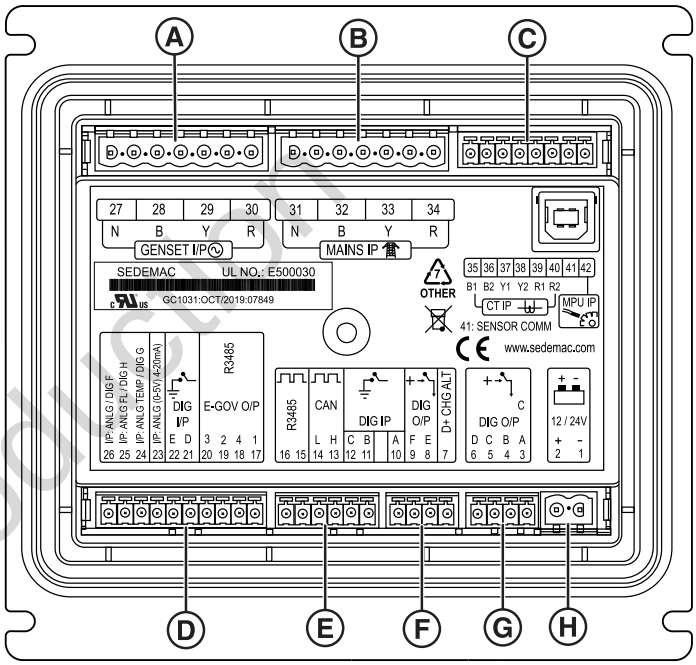

Not for Reproduction

Fuel Pressure Regulator

NOTICE

Remove fuel from the unit by closing the fuel shutoff valve external to the generator and disconnecting the external fuel piping.

Removal

1. Unthread the 3/4-inch diameter piping from the fuel regulator.
2. Squeeze the hose clamp and pull the fuel hose from the fuel inlet fitting at the top of the fuel pressure regulator.
3. Remove the hex screws to release the fuel pressure regulator support bracket from the base.
4. Disconnect the 2-pin connector from the fuel solenoid built into the fuel regulator.
5. Remove the support bracket from the fuel pressure regulator.
6. Discard the fuel pressure regulator.

Installation

1. Install the support bracket onto the fuel pressure regulator.
2. Using a wire brush, remove all residual Loctite from the threads of the 3/4-inch pipe nipple (with attached fuel solenoid). Apply Loctite 565 Thread Sealant to the threads. Take care to avoid getting sealant into the open end of the pipe.
3. Insert the 3/4-inch pipe fitting into the Rear Right Corner Panel and thread into the fuel pressure regulator.
4. Install two hex screws to fasten the fuel pressure regulator support bracket to the base. Tighten screws to 30-60 in-lbs (37 Nm).
5. Squeeze the hose clamp and install the fuel hose onto the fuel inlet fitting at the top of the fuel pressure regulator.
6. Reconnect the 2-pin connector from the fuel solenoid built into the fuel regulator.
7. Reconnect the external fuel piping to the generator.

High Engine Temperature Switch

Removal

1. Find the switch just below the oil filter.
2. Unplug the 2-pin connector.
3. Remove the screws and lock washers to release the switch bracket from the crankcase.
4. Remove the screws with the captive washers to release the switch from the bracket. Discard the switch.

Installation

1. Install the screws with captive washers to connect the new switch to the bracket.
2. Install the screws and lock washers to connect the bracket to the crankcase. Alternately tighten the screws to 40-100 in-lbs (5-11 Nm).
3. Plug in the 2-pin connector.

Low Oil Pressure Switch

Removal

1. Find the switch on the sump cover that is left of the oil filter.
2. Remove the socket terminal of Wire E-85 from the switch spade contact.
3. With a 1-1/16-inch (26 mm) deep well socket on flats, rotate the switch in a counter-clockwise direction to remove.

Installation

1. Put Loctite 565 Thread Sealant onto the threads of the new switch.
2. Remove residual Loctite from the sump cover bore with an applicable thread chaser.
3. Install the switch and tighten with your hand.
4. With a 1-1/16-inch (26 mm) deep well socket on flats, tighten the switch to 80 in-lbs (9 Nm).
5. Install the socket terminal of Wire E-85 onto the switch spade contact.

Engine Oil Filter, Dipstick, and Drain Hose

Change Engine Oil and Filter

1. Use one wrench to hold the hex on the oil drain hose fitting (to prevent rotation), and use a second wrench to remove the drain plug.
2. Drain the oil into a suitable container.
3. Install the drain plug back into the oil drain hose fitting.
4. Rotate the oil filter in a counter-clockwise direction to remove it from the oil filter adapter.
5. Check that the old gasket is not stuck to the oil filter adapter and that the gasket surface is clean and dry.
6. Install a film of clean engine oil to the gasket of a new oil filter.
7. Install the oil filter by hand until the gasket contacts the oil filter adapter.
8. Tighten the oil filter an additional 1/2-3/4 turn.
9. Remove the fill cap and fill the engine with the correct quantity and type of oil.
    a. **Quantity (Dry Engine):**
        1. **18-26 kW (M61)**: Add 78-80 ounces (or 2.44-2.5 quarts).
    b. **Type:** Use only API SJ/CF 5W-30 synthetic oil. Select the best viscosity for the outdoor temperature range expected. DO NOT use special additives.
10. Install the fill cap.
11. Install the 15 amp ATM fuse for the controller in the fuse block, located in the engine compartment.

Not for Reproduction

12. Press and hold START/SELECT on the controller to start the engine.
13. Let the engine run for one minute and check for leaks.
14. Press STOP/CONFIG to stop the engine.
15. Wait a minimum of five minutes for the engine to cool and to allow the oil to drain back to the oil pan.
16. Check the engine oil level as follows:

NOTICE

The most accurate oil level readings are obtained when the engine is cold.

   a. Remove the dipstick and wipe it dry with a clean, lint-free cloth.
   b. Slowly insert the dipstick into the dipstick tube.
   c. Check that the dipstick is fully installed in the dipstick tube.
   d. Wait a minimum of ten seconds and then slowly remove the dipstick.
   e. Check that the oil level on the dipstick is at or near the top of the crosshatch pattern (A, Figure 91).

NOTICE

Check the oil level on both sides of the dipstick. The lower level of the two readings is the correct oil level measurement.

   f. If necessary, remove the oil fill cap and slowly add oil. **DO NOT OVERFILL**.
   g. Install the dipstick and oil fill cap.

17. Press and hold START/SELECT on the controller to start the engine. Check for leaks while the engine runs.
18. Let the engine run for a minimum of one minute.
19. Press and hold STOP/CONFIG to stop the engine.
20. Return to step 15. Repeat the steps if necessary until the engine oil level is correct.
21. Remove the 15 amp ATM fuse for the controller from the fuse block.

NOTICE

Dispose of used oil and the oil filter at a proper waste disposal or recycling center.

91

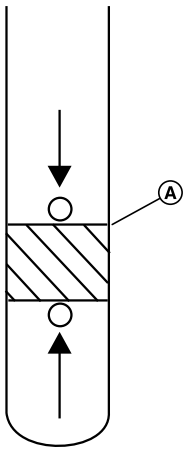

Starter and Starter Solenoid

Removal

1. Disconnect the battery.
2. Pull the rubber boot from the post on the starter solenoid.
3. Remove the hex nut, lock washer, lug of the positive battery (+) cable, and Wire 13Y from the post.
4. Disconnect the socket terminal of Wire E-56C from the starter solenoid spade contact.
5. Remove the two bolts to release the starter from the starter mount.

Installation

1. Install the two bolts to connect a new starter to the starter mount. Alternately tighten the bolts to 140 in-lbs (16 Nm).
2. Connect the socket terminal of Wire E-56C to the starter solenoid spade contact.
3. Install Wire 13Y, the lug of the positive battery (+) cable, lock washer, and hex nut onto the post. Tighten the hex nut to 25-50 in-lbs (3-6 Nm).
4. Pull the rubber boot over the post.

Starter Relay

Removal

1. Disconnect the battery.
2. Locate the fuse block in the engine compartment and remove the fuse block cover.
3. Remove the relay from the fuse block.
4. Discard the starter relay.

Installation

1. Obtain a new starter relay.
2. Install a new relay in the fuse block base.

NOTICE

To correctly install the starter relay, the writing SHOULD NOT be visible when viewing the fuse block from the engine/rear of the generator. The starter relay writing should face the engine/electrical bulkhead wall.

3. Reinstall the fuse block cover.

Stepper Motor and Linkages

Removal

1. Remove the screws to release the cover from the control box.
2. At the stepper motor throttle arm, remove the push rod from the groove in the clevis. Remove the push rod from the hole in the clevis.
3. If damaged or worn, repeat step 2 to remove the push rod and the clevis from the throttle body arm.
4. Disconnect the stepper motor harness connector from the controller pigtail.

Not for Reproduction

5. Remove the screws to release the stepper motor from the bottom of the control box. Discard the stepper motor.

Installation

1. From the side closest to the throttle body, install the clevis into the bottom hold of the throttle arm.
2. On the opposite side of the throttle arm, put the push rod through the hole in the bulkhead into the control box.
3. Install the screws to connect the new stepper motor to the bottom of the control box. Alternately tighten the screws to 15-25 in-lbs (2-3 Nm).
4. From the side closest to the stepper motor, install the clevis into the hole of the throttle arm.
5. On the opposite side of the throttle arm, put the push rod through the hole in the clevis. Snap the push rod into the groove in the clevis.
6. Make sure that the push rod moves freely without contacting the bulkhead or engine parts. Make sure that the stepper motor shaft rotates freely without sticking.
7. Connect the stepper motor harness connector to the controller pigtail.
8. Install the screws to connect the cover to the control box. Alternately tighten the screws to 15-25 in-lbs (2-3 Nm).

Alternator (Stator and Rotor)

NOTICE

Contact Briggs & Stratton Technical Support to receive prior authorization before installing a new stator and/or rotor.

Removal

1. Remove the negative battery cable (black) from the negative battery (-) terminal.
2. Remove the roof as follows:
   a. Open the roof.
   b. Remove the hex nut and pull the shoulder bolt from the roof flange and gas spring eyelet. Compress the gas spring tucking eyelet under the side panel top flange. Repeat this step on the opposite side.
   c. Close the roof.
   d. Remove the hex nut and pull the shoulder bolt from the Roof Hinge Support and roof hinge. Repeat this step on the opposite side.
   e. Remove the roof.
3. Remove the front panel as follows:
   a. Loosen the two self-retaining fasteners that secure the front panel to the unit.
   b. Lift the front panel to remove it from the unit.
4. Remove the air inlet side end cap as follows:
   a. Loosen the two self-retaining fasteners that secure the end cap to the unit.
   b. Lift the end cap to remove it from the unit.
5. Remove the exhaust outlet side end cap as follows:
   a. Loosen the two self-retaining fasteners that secure the end cap to the unit.
   b. Lift the end cap to remove it from the unit.
6. Remove the back panel as follows:
   a. Using a No. 2 Phillips head screwdriver, loosen the two self-retaining fasteners that secure the back panel to the unit.
   b. Using a standard flat-blade screwdriver, gently lift the back panel lip off of the back rail.
   c. Tip the back panel back under the roof.
   d. Move to the back of the unit and lift the back panel off.
7. Gain access to the electrical top panel.
8. Remove the end cover on the top left.
9. Remove the bolts from the bulkhead support brackets.
10. Remove the bolts securing the brackets on the alternator-side bulkhead into the generator base.
11. Using a No. 2 Phillips head screwdriver, remove the 7 bolts securing the alternator fan housing cover and remove the housing cover.
12. Remove 7/16"-head bolts securing the alternator fan to the rotor and remove the fan.
13. Remove the 5/32" Allen head bolts securing the alternator fan shroud and remove the shroud.
14. Slide the muffler box housing off.
15. Remove the 4 10mm-head bolts securing the fan shroud adapter to the rear bearing carrier adapter.
16. Using a 7mm socket wrench, remove the brush assembly.
17. Using a 9/16" socket wrench, remove the rotor bolt.

NOTICE

Reinstall the rotor bolt loose into the shaft in order to support the weight of the rotor for its eventual removal.

18. Remove both 1/2"-head bolts securing the rear bearing carrier to the generator base.
19. Lift the alternator enough to slide a 2x4 under the engine adapter housing.
20. Remove the 4 12mm bolts securing the stator to the engine adapter.
21. Using a hammer or prybar, remove the stator from the engine assembly and set aside.
22. Use a large dead blow hammer to loosen and remove the rotor from the engine PTO shaft.

NOTICE

If the dead blow hammer does not work, make a jack bolt to remove the rotor.

Installation

NOTICE

Inspect and ohm test rotor and stator windings before installation.

Not for Reproduction

1. With a clean citrus degreaser, fully wipe the engine crankshaft.
2. Get a new stator and inspect for damage or defects. Make sure that there are no loose or damaged wires.
3. Get a new rotor and inspect for damage or defects. Make sure that the slip rings are clean and that there are no loose or damaged wires.
4. Use compressed air to blow any dust, dirt, or debris out of the rotor bore. Use a clean citrus degreaser to fully wipe the inside taper of the rotor bore.
5. Carefully slide the stator onto the engine assembly until it meets the engine housing.
6. Install the 4 bolts to secure the stator to the engine housing.

NOTICE

Start the bolts by hand and then fully secure by using a cross sequence pattern with a torque wrench.

7. Install the rotor bolt with the fan adapter.
8. Lift the alternator to remove the 2x4.
9. Install the 2 bolts to secure the rear bearing carrier to the generator base.
10. Inspect and install the 2 bolts to secure the brush assembly and plug the wires back in.
11. Install the 4 bolts to secure the fan adapter, using the alignment dowel with the arrow pointing up.
12. Install the 4 Allen-head bolts to secure the fan shroud.
13. Install the fan spacer between the fan and hub.
14. Install the 4 bolts securing the rotor fan using Loctite.
15. Using a No. 2 Phillips head screwdriver, install the 7 bolts to secure the fan cover.
16. Install the muffler housing:
    a. Install the 4 bolts on the operator side (front) that secure the housing to the base of the generator.
    b. Install the 3 bolts that secure the housing to the back side of the generator.
    c. Attach the cross beam support.
    d. Install the 2 bolts on either side of the roof mount.
17. Install the Left Side Panel:
    a. Low the panel (with the attached Left Roof Hinge Support, shear brace with gas spring, and metal strap) and put the bottom tab in the slot of the base. Spread open the panel if necessary to clear the alternator intake and exhaust ducts.
    b. At the rear of the unit, install the screws to connect the Left Roof Hinge Support (and shear brace with gas spring) to the base. Alternately tighten the screws to 20-40 in-lbs (2-5 Nm).
    c. Install the screw to connect the rear horizontal support rail to the Left Roof Hinge Support.
    d. Install the screw to connect the metal strap to the rea of the panel. Tighten the screw to 20-40 in-lbs (2-5 Nm).
    e. At the front of the unit, install the screw to connect the bottom flange of the panel to the base. Tighten the screw to 30-60 in-lbs (3-7 Nm).
18. Install the roof:
    a. Compress the gas spring tucking eyelet under the top flange of the side panel. Repeat this step on the opposite side.
    b. Put the roof onto the unit and put it in the closed position.
    c. With the head of the bolt facing the outside, move the shoulder bolt through the roof hinge and the Roof Hinge Support. Install the hex nut. Repeat this step on the opposite side. Alternately tighten the hex nuts to 25-50 in-lbs (3-6 Nm).
    d. Open the roof.
    e. Release the gas spring from under the top flange of the side panel. With the head of the bolt facing the inside, move the shoulder bolt through the gas spring eyelet and roof flange. Install the hex nut. Repeat this step on the opposite side. Alternately tighten the hex nuts to 25-50 in-lbs (3-6 Nm).

92

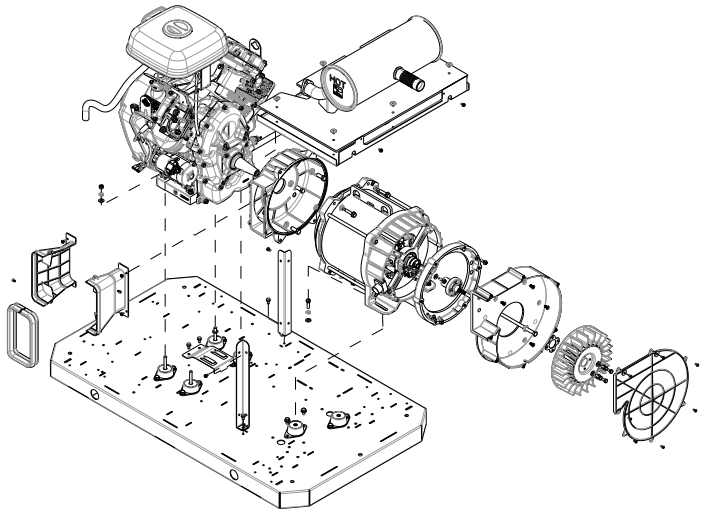

Not for Reproduction

This page is intentionally left blank.

Not for Reproduction

Section 10: Wiring Diagrams

WIRING DIAGRAM AND SCHEMATIC (ENGINE COMPARTMENT AND COMPONENTS) ---------- 96
WIRING DIAGRAM AND SCHEMATIC (ELECTRICAL BOX AND ENGINE INTAKE AREA) ---------- 97

Not for Reproduction

Wiring Diagram and Schematic (Engine Compartment and Components)

WIRE COLOR LEGEND	
GENERAL SIGNAL TYPE	COLOR
AC 240V L1 (UTILITY AND GENERATOR)	BLUE
AC 240V L2 (UTILITY AND GENERATOR)	BROWN
DC +12V	RED
DC GROUND	BLACK
DC HIGH CURRENT OUTPUT	PINK
DC OUTPUT FROM AVR	PURPLE
DC OUTPUT FROM CONTROLLER	YELLOW
DC OUTPUT FROM SENSOR	GRAY
EARTH	GREEN
NEUTRAL	WHITE
SPECIAL SIGNAL TYPE	COLOR
CAN	GREEN & YELLOW
CURRENT TRANSFORMER	BLACK & WHITE
MODBUS (RS-485)	ORANGE & WHITE
STEPPER	BLACK, BLUE, WHITE & YELLOW
ALTERNATOR POWER, DPE, ROTOR, AND SENSING	BLACK, WHITE & YELLOW

- TWISTED WIRE

"E" PRECEDES WIRE NUMBERS FOR WIRES IN ENGINE COMPARTMENT

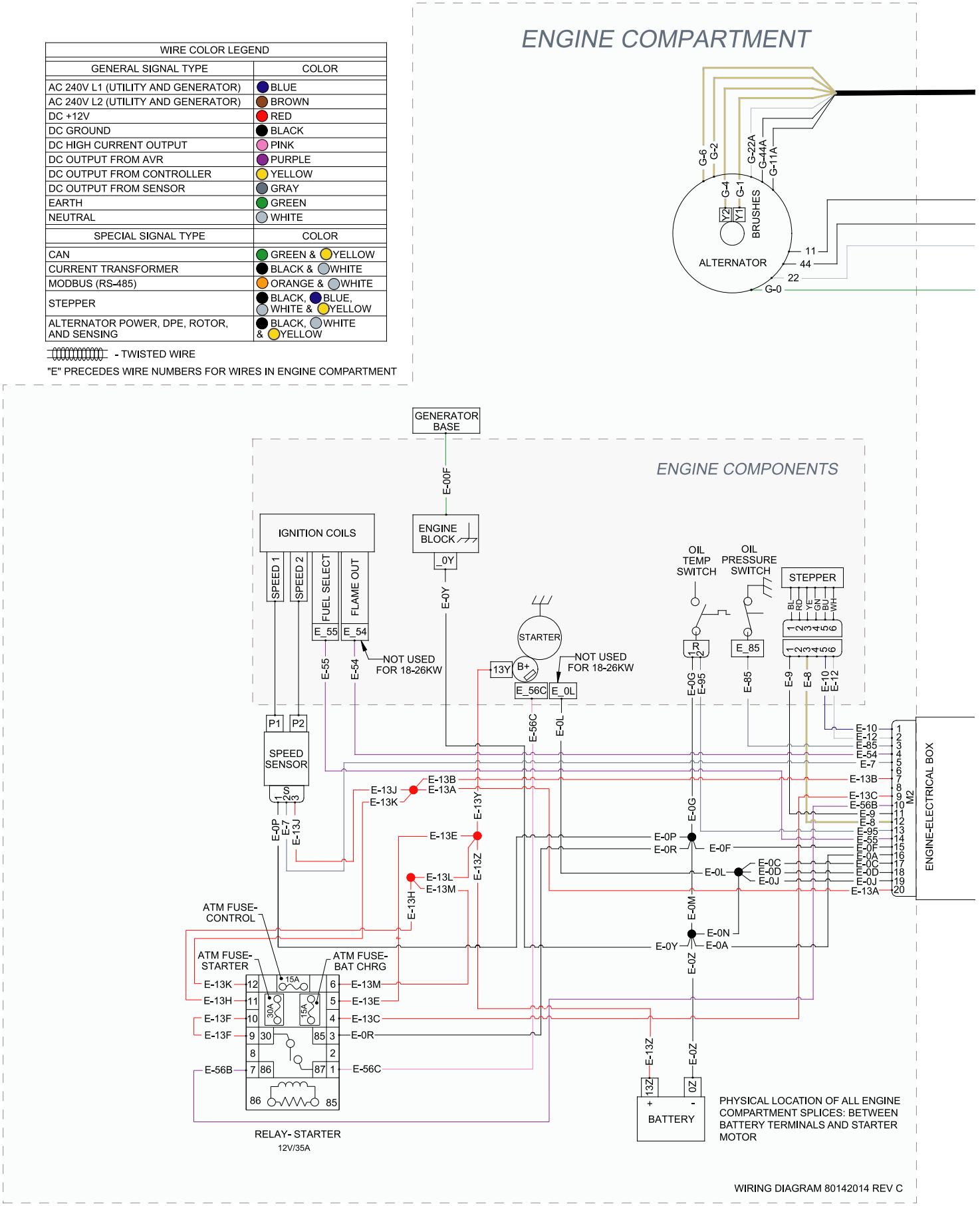

Wiring Diagram and Schematic (Electrical Box and Engine Intake Area)

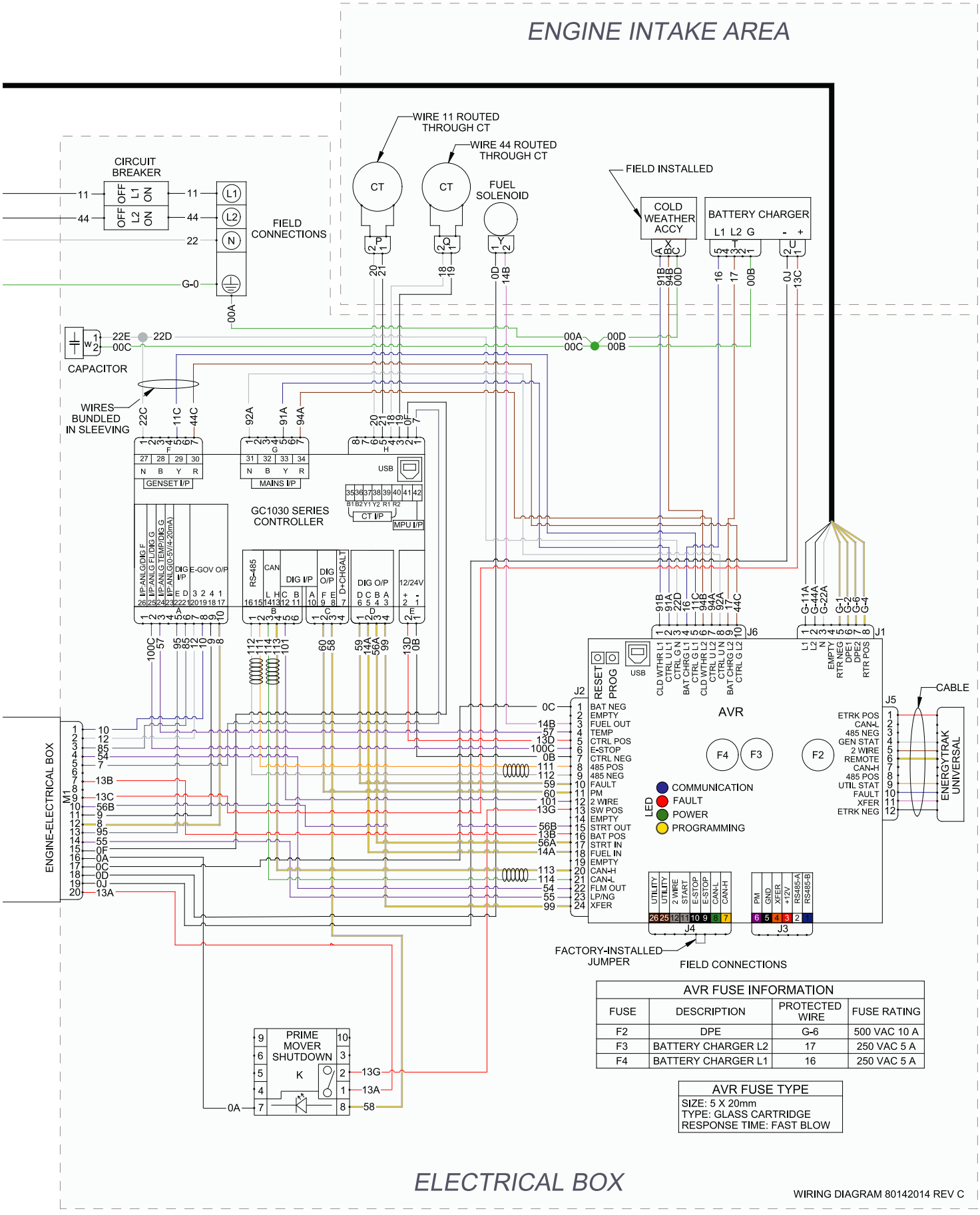

AVR FUSE INFORMATION			
FUSE	DESCRIPTION	PROTECTED WIRE	FUSE RATING
F2	DPE	G-6	500 VAC 10 A
F3	BATTERY CHARGER L2	17	250 VAC 5 A
F4	BATTERY CHARGER L1	16	250 VAC 5 A

AVR FUSE TYPE
SIZE: 5 X 20mm TYPE: GLASS CARTRIDGE RESPONSE TIME: FAST BLOW

This page is intentionally left blank.

Not for Reproduction

Section 11: Notes

NOTES ---------- 100
NOTES ---------- 101
NOTES ---------- 102
NOTES ---------- 103
NOTES ---------- 104
NOTES ---------- 105
NOTES ---------- 106
NOTES ---------- 107

Not for Reproduction

NOTES

Not for Reproduction

NOTES

Not for Reproduction

NOTES

Not for Reproduction

NOTES

Not for Reproduction

NOTES

Not for Reproduction

NOTES

Not for Reproduction

NOTES

Not for Reproduction

NOTES

Not for Reproduction