GLACIER BAY®

Item # 1015196547 1015196543 1015196560
1015196554 1015196551 1015196557
Model # 25066-VS20 25066-VS24 25066-VS30

USE AND CARE GUIDE

FARIS SINGLE SINK VANITY

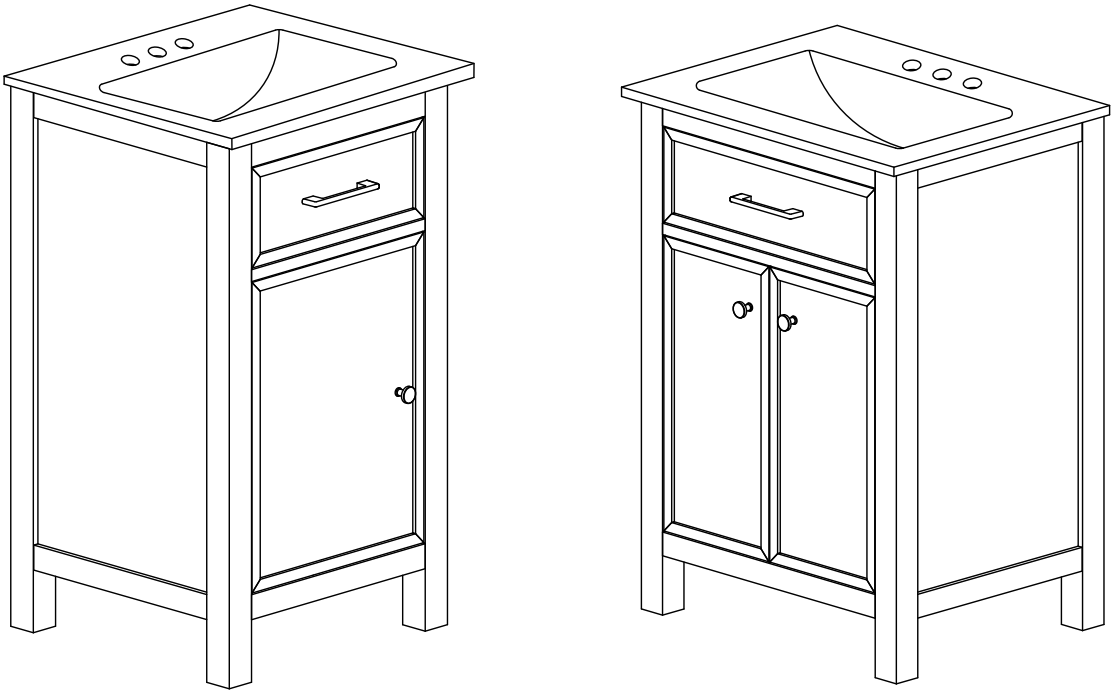

Questions, problems, missing parts? Before returning to the store,
call Glacier Bay Customer Service.
8 a.m. – 7 p.m., EST, Monday – Friday, 9 a.m. – 6 p.m., EST, Saturday

1-855-HD-GLACIER (1-855-434-5224)

HOMEDEPOT.COM / GLACIERBAY

THANK YOU

We appreciate the trust and confidence you have placed in Glacier Bay through the purchase of this vanity. We strive *to continually create quality products designed to enhance your home. Visit us online to see our full line of products available for your home improvement needs. Thank you for choosing Glacier Bay!*

Table of Contents

Safety Information **2**
Warranty **3**
California and Minnesota Residents **4**
California residents 4
Minnesota residents 4
Introduction to CLICKREADY Technology **5**
Pre-Assembly **6-7**
Planning Assembly 6
Tools Required 6
Package Contents 7
Assembly **8-16**
Maintenance **17**
Care and Cleaning **17**

Safety Information

DANGER

- Keep small parts away from children during assembly.
- Failure to follow warnings and cautions could result in serious injury.
- Product is designed to hold 50 lbs. Exceeding this limit may damage the product or cause injury to the user.
- Do not use harsh bathroom cleaners or grout cleaners on any natural stone.

WARNING

- Read these instructions carefully and keep in a safe place.
- Adult assembly required.
- This product should only be used on a flat and level surface.
- Do not over tighten connectors (screws, bolts, etc.) Overtightening can lead to product damage.
- Small parts may present choking hazard prior to assembly.
- Do not stand, step, or climb on unit.

CAUTION

- USE preventative cleaning measures to keep your stone pristine.
- USE sealers according to the product specific directions.
- Blot spills quickly, and wash with mild soap and warm water.
- Stone countertops (Granite, Marble, etc.) are surprisingly resilient to stains and scratches. However, as a preventative measure, any spills on the stone surfaces should be wiped up within a reasonable amount of time. Do not let liquid sit on the stone overnight. Stones are most prone to staining by oil and acid, so be sure to blot these spills up as soon as they happen. Follow up by cleaning the stone with a mild non-abrasive soap and water.
- Be sure to check all packing materials carefully for small parts that may have come loose inside the carton during shipment. If parts are missing, contact THE HOME DEPOT to obtain any missing parts.
- Using abrasive cleansers can damage the surface.

Warranty

LIMITED LIFETIME WARRANTY

WHAT IS COVERED

Glacier Bay products are manufactured with superior quality standards and workmanship and are backed by our limited lifetime warranty. Glacier Bay products are warranted to the original consumer purchaser to be free of defects in materials or workmanship. We will replace FREE OF CHARGE any product or parts that proves defective. Simply, return the product / part to any of The Home Depot retail locations or call 1-855-HD-GLACIER (1-855-434-5224) to receive the replacement item. Proof of purchase (original sales receipt) from the original consumer purchaser must be made available for all Glacier Bay warranty claims.

WHAT IS NOT COVERED

This warranty excludes incidental / consequential damages and failures due to misuse, abuse or normal wear and tear. This warranty excludes all industrial, commercial & business usage, whose purchasers are hereby extended a five-year limited warranty from the date of purchase, with all other terms of this warranty applying except the duration of warranty. Some states and provinces do not allow the exclusion or limitation of incidental or consequential damages, so the above limitations may not apply to you. This warranty gives you specific legal rights and you may also have other rights that vary from state to state and province to province.

Contact the Customer Service Team at 1-855-HD-GLACIER(1-855-434-5224) or visit www.HomeDepot.com.

California and Minnesota Residents

CALIFORNIA RESIDENTS

WARNING: THIS PRODUCT CAN EXPOSE YOU TO CHEMICALS INCLUDING FORMALDEHYDE WHICH IS KNOWN TO THE STATE OF CALIFORNIA TO CAUSE CANCER AND BIRTH DEFECTS OR OTHER REPRODUCTIVE HARM. GO TO WWW.P65Warnings.ca.gov/products

MINNESOTA RESIDENTS

"IMPORTANT HEALTH NOTICE.

SOME OF THE BUILDING MATERIALS USED IN THIS HOME (OR THESE BUILDING MATERIALS) EMIT FORMALDEHYDE. EYE, NOSE, AND THROAT IRRITATION, HEADACHE, NAUSEA AND A VARIETY OF ASTHMA-LIKE SYMPTOMS, INCLUDING SHORTNESS OF BREATH, HAVE BEEN REPORTED AS A RESULT OF FORMALDEHYDE EXPOSURE. ELDERLY PERSONS AND YOUNG CHILDREN, AS WELL AS ANYONE WITH A HISTORY OF ASTHMA, ALLERGIES, OR LUNG PROBLEMS, MAY BE AT GREATER RISK. RESEARCH IS CONTINUING ON THE POSSIBLE LONG-TERM EFFECTS OF EXPOSURE TO FORMALDEHYDE.

REDUCED VENTILATION MAY ALLOW FORMALDEHYDE AND OTHER CONTAMINANTS TO ACCUMULATE IN THE INDOOR AIR. HIGH INDOOR TEMPERATURES AND HUMIDITY RAISE FORMALDEHYDE LEVELS. WHEN A HOME IS TO BE LOCATED IN AREAS SUBJECT TO EXTREME SUMMER TEMPERATURES, AN AIR-CONDITIONING SYSTEM CAN BE USED TO CONTROL INDOOR TEMPERATURE LEVELS. OTHER MEANS OF CONTROLLED MECHANICAL VENTILATION CAN BE USED TO REDUCE LEVELS OF FORMALDEHYDE AND OTHER INDOOR AIR CONTAMINANTS.

IF YOU HAVE ANY QUESTIONS REGARDING THE HEALTH EFFECTS OF FORMALDEHYDE, CONSULT YOUR DOCTOR OR LOCAL HEALTH DEPARTMENT."

CLICK READY™ 101

Introduction to CLICKREADY Technology

Powered by OVVO

This vanity uses PERMANENT Ready to Assemble (RTA) technology that CANNOT be disassembled. You must carefully review instructions and ensure proper alignment during assembly.

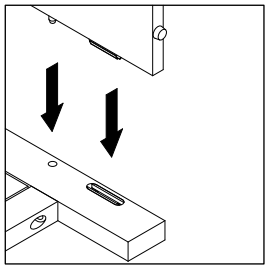

All connectors and dowels must line up when assembling cabinet.

Quantity of connectors/dowels depends on the cabinet type and size.

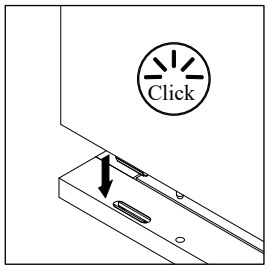

There will be a “clicking” sound when the connectors lock together properly.

BEFORE INSTALLATION, ENSURE ALL CONNECTORS ARE LOCKED IN PLACE AND SEATED.

Pre-Assembly

PLANNING ASSEMBLY

Estimated installation time: 30 minutes
Number of people required: 2 people

Compare all parts with the Hardware Included and Package Contents sections. If any part is missing or damaged, do not assemble this product. Contact Customer Service.
Assemble the vanity on a soft surface such as carpet or the cardboard container of this product.

TOOLS REQUIRED

NOTE: Tools are not included.



Safety goggles



Wrench

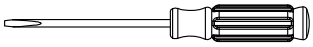

Screwdriver



Safety gloves

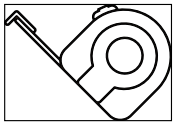

Measuring Tape

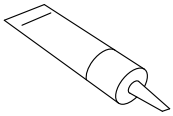

Neutral cure silicone sealant



Level

Pre-Assembly

PACKAGE CONTENTS

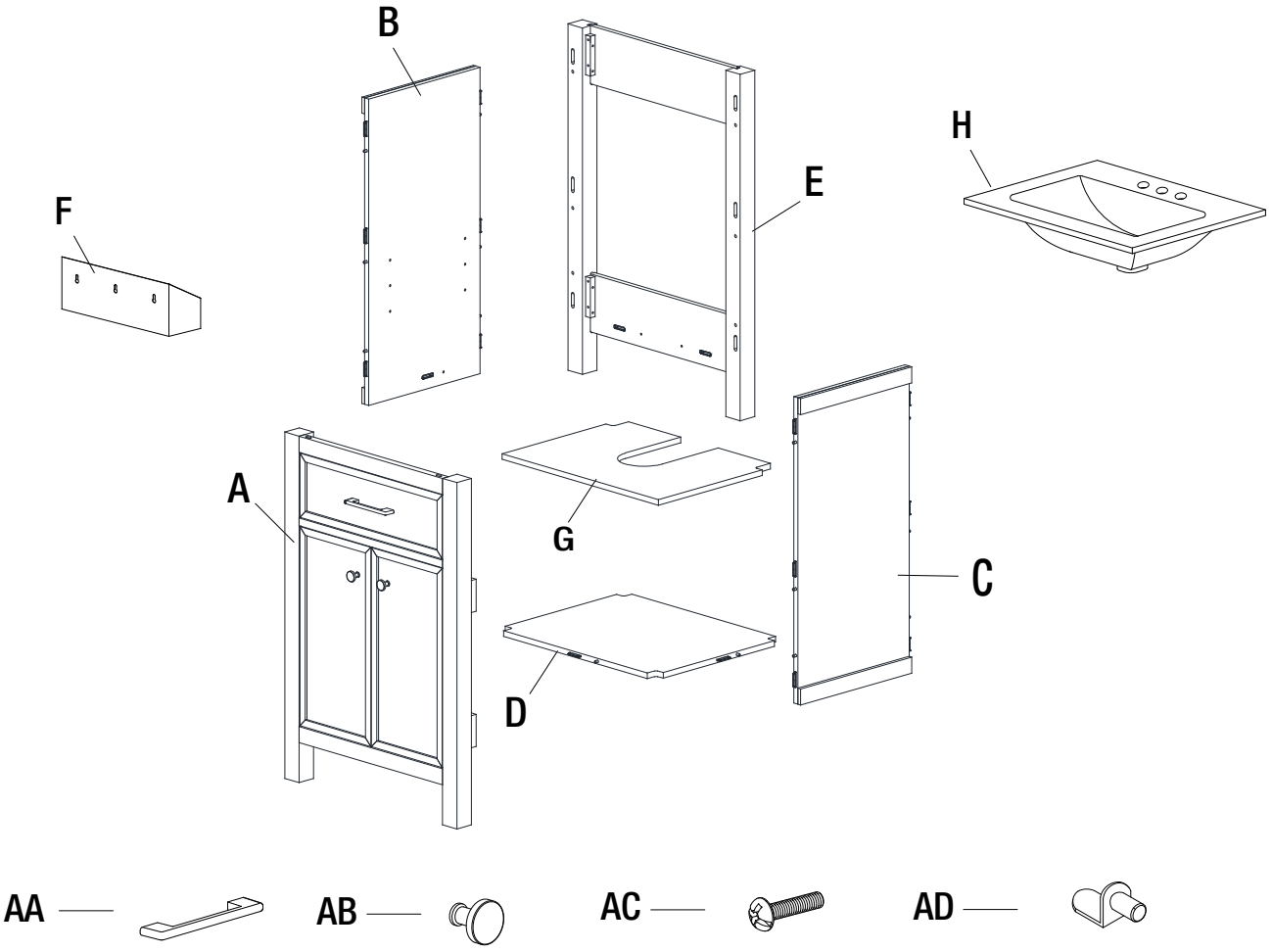

Part	Description	Quantity
A	Front frame	1
B	Left side panel	1
C	Right side panel	1
D	Bottom panel	1
E	Back frame	1
F	Flip drawer box	1
G	Shelf	1
H	Countertop	1
AA	Handle	1
AB	Knobs	2
AC	Set screws	4
AD	Shelf support pins	4

* The quantity of knob (AB) and set screw (AC) depend on the door of the vanity.

- Single door has 1 unit of knob (AB) and 3 units of set screw (AC).
- Dual door have 2 units of knobs (AB) and 4 units of set screws (AC).

Assembly

1 Install the side panels into the front frame

IMPORTANT : There will be a “clicking” sound when the connectors lock together properly.

- ☐ Start by placing the front frame (A) flat on a smooth surface that will not scratch or damage the face of the vanity.
- ☐ Insert the side panel (B) into the front frame (A) by aligning the male and female dowels and connectors on each panel and frame.
- ☐ Use both hands to firmly press the side panel (B) down at all locations with connectors to lock into place tightly.
- ☐ Repeat this step for the side panel (C).

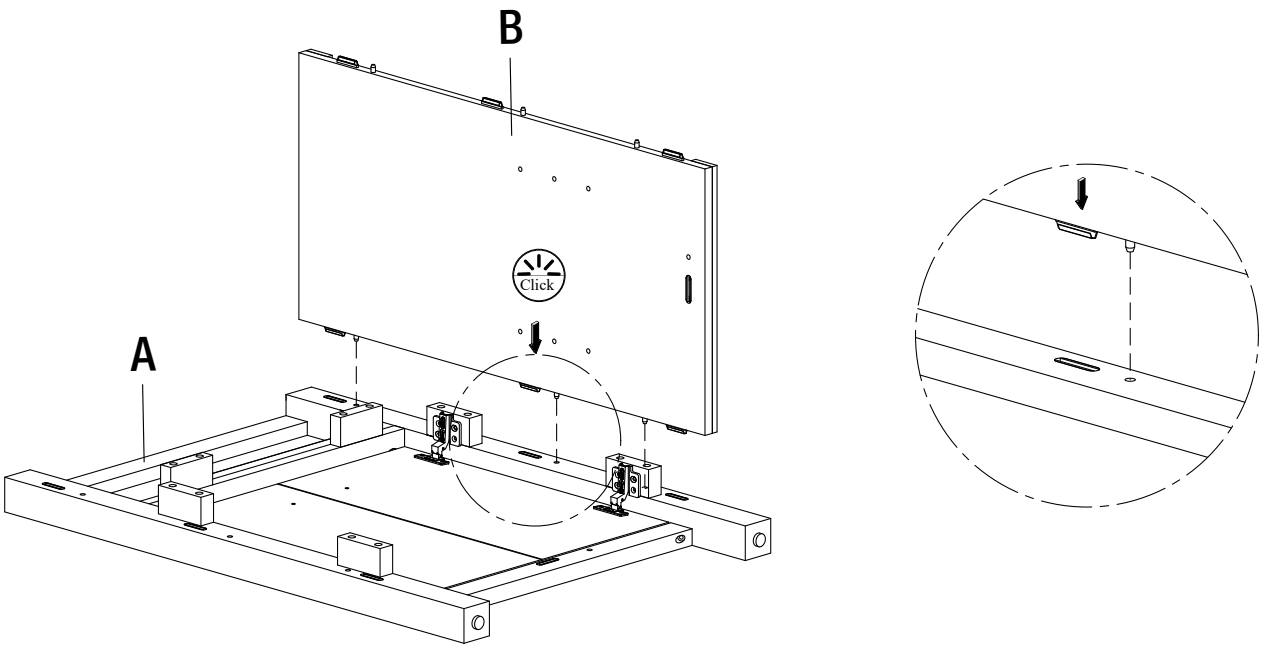

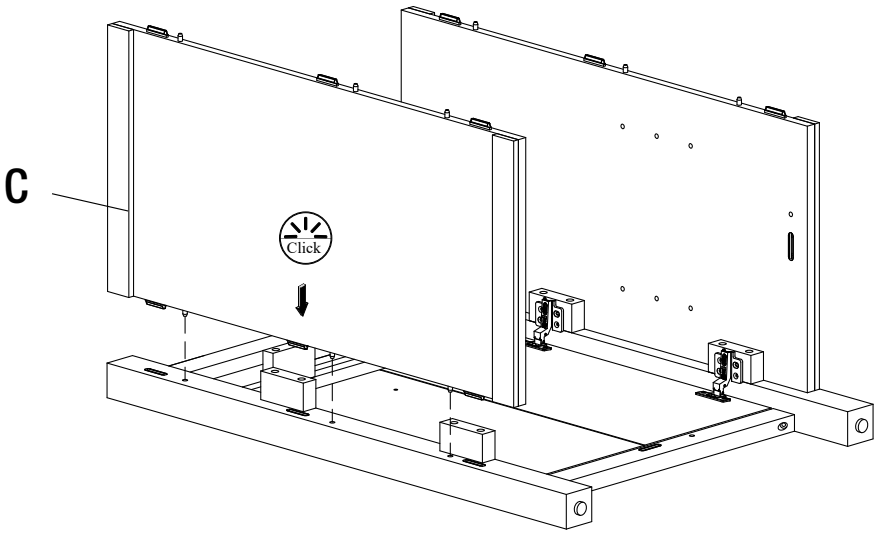

Assembly(continued)

2 Attach the bottom panel

- □ Insert the bottom panel (D) into the front frame (A) by aligning the male and female dowel and connector on each panel and frame, use both hands to firmly press the bottom panel (D) down, and lock into place tightly.
- □ Align the male and female dowels and connectors (B, C, and D), use both hands to firmly clap the panels (B and C), and lock into place tightly.

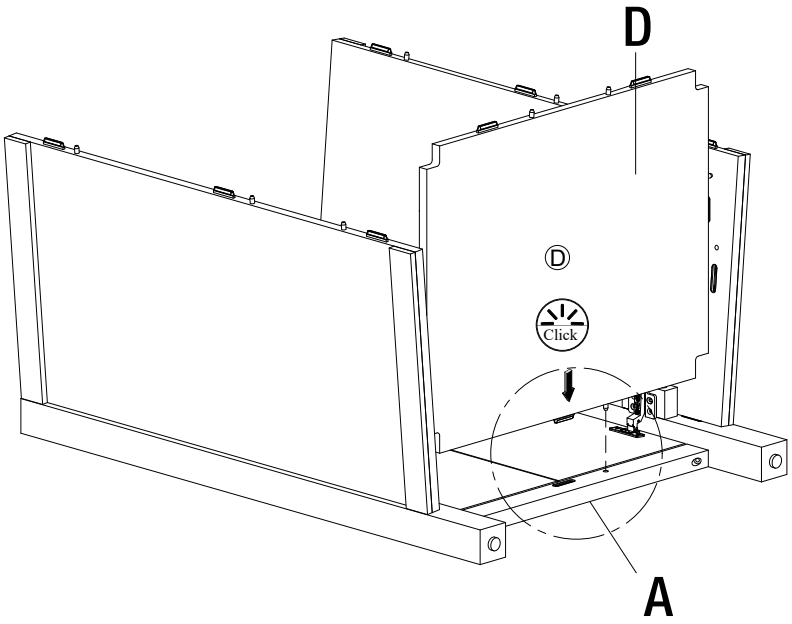

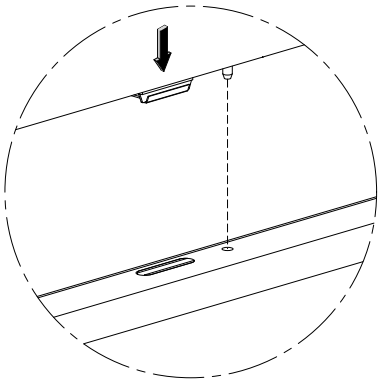

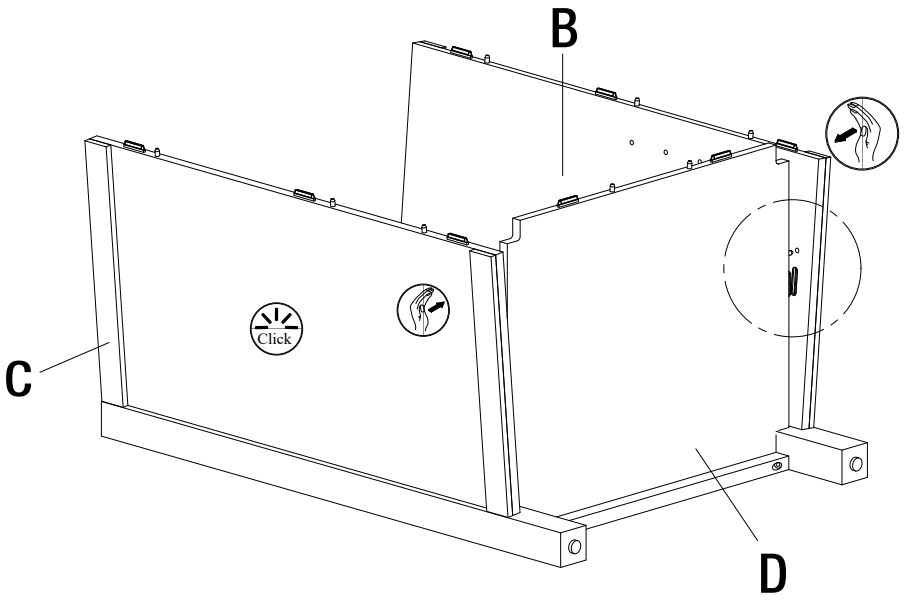

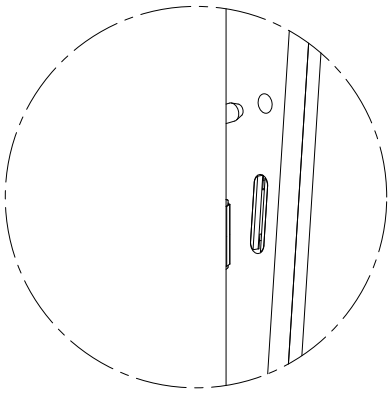

Assembly(continued)

3 Attach the back frame

- □ Attach the back frame (E), align the male and female dowels and connectors on each panel (B, C and D), use both hands to firmly press the back frame (E) down, and lock into place tightly.

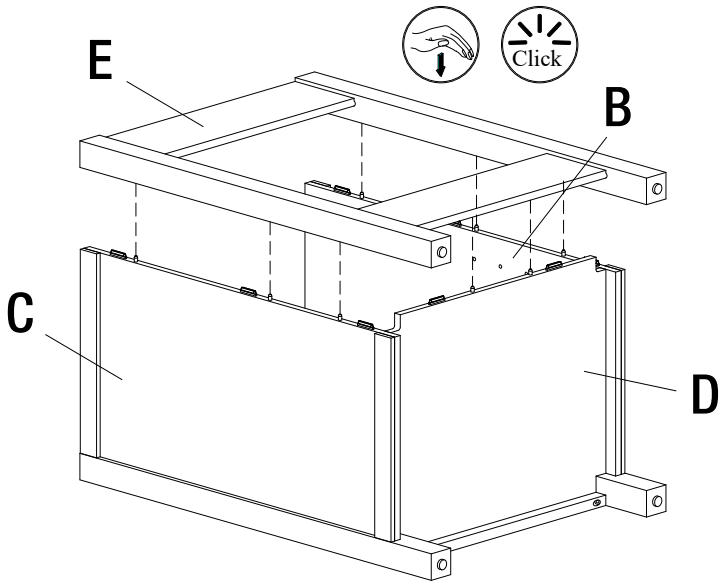

4 Install the handle of flip drawer

- □ Carefully flip the vanity unit to its front frame from the back.
- □ Install the handle (AA) and tighten with set screws (AC).

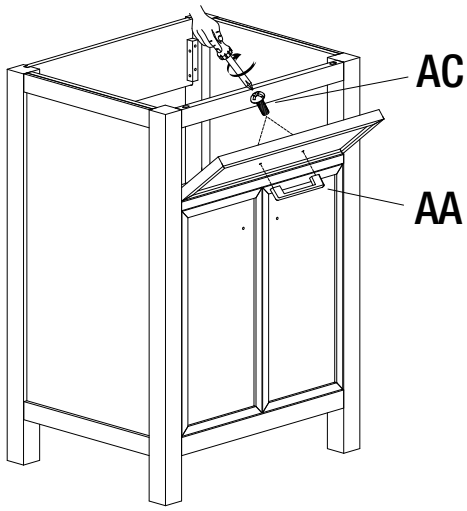

5 Install the flip drawer box

□ Attach the flip drawer box (F), aligning the holes with the locking screws, and secure into the place.

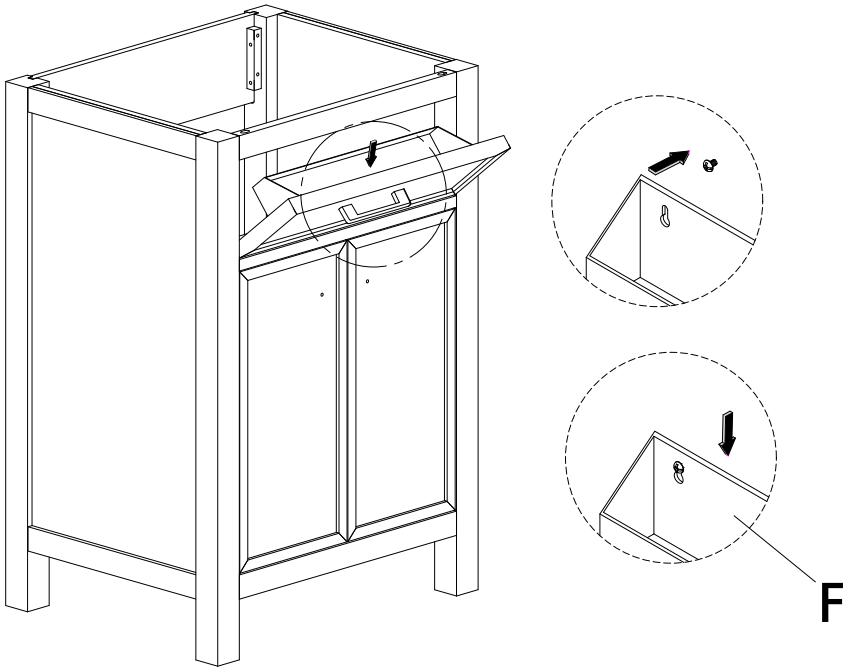

6 Install the knobs

NOTE:

□ Continue with step 6.1 to install the knobs for dual door vanity。

□ Determine the left or right-opening of door operation for single door vanity, see 6.2a for the left-opening of door operation and 6.2b for the right-opening of door operation instructions;

6.1 Knob installation for dual door vanity

□ Install the knob (AB) and tighten with the set screw (AC) .

□ Repeat this step for the left door.

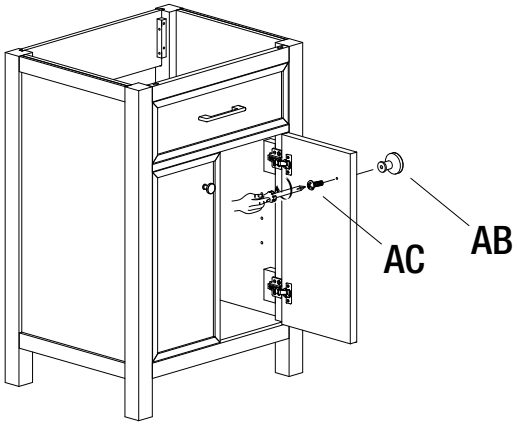

6 Install the knob

6.2 Knob installation for single door vanity

6.2a The left-opening of door operation

□ Install the knob (AB) and tighten with the set screw (AC) .

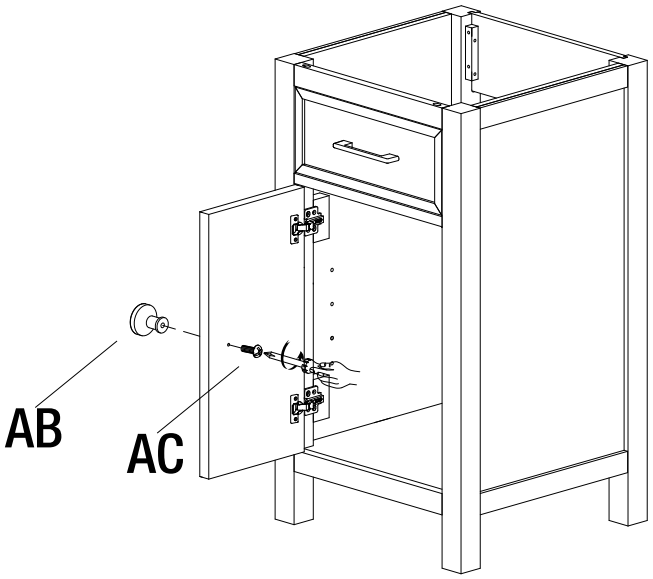

6.2b The right-opening of door operation

□ Keep the door in a fully open position, loosen the screws to release upper and lower hinges from the left side panel.

□ Flip the door upside down, assemble the upper and lower hinges to the right side panel, and tighten with screws.

□ Install the knob (AB) and tighten with the set screw (AC).

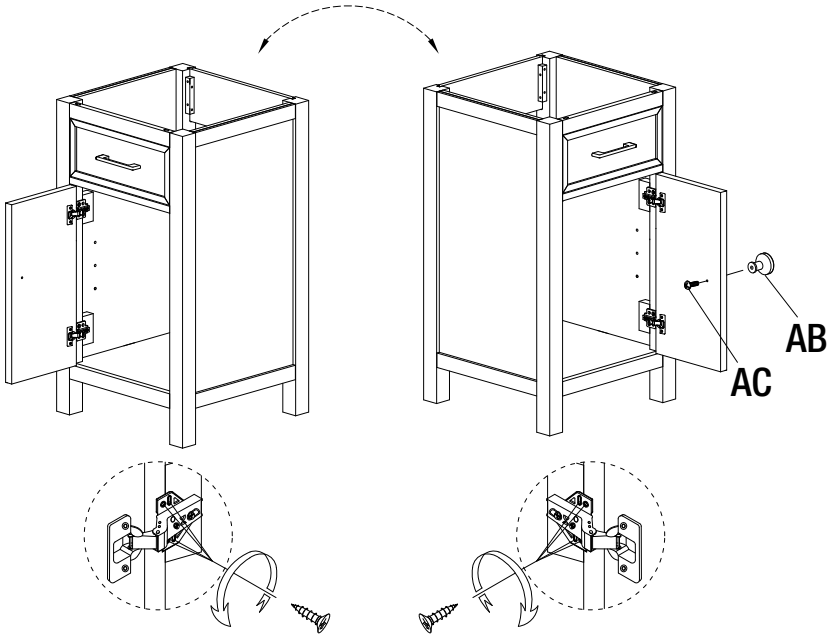

7 Install the shelf

- □ Insert two shelf support pins (AD) into the pre-drilled holes on the left side at the desired height.
- □ Tilt the shelf (G) and carefully place it inside the vanity, resting it on the left-side pins (AD).
- □ From underneath the shelf, insert two shelf support pins (AD) into the pre-drilled holes on the right side at the same height.
- □ Adjust the shelf (G) as needed so it sits securely on all four pins (AD).

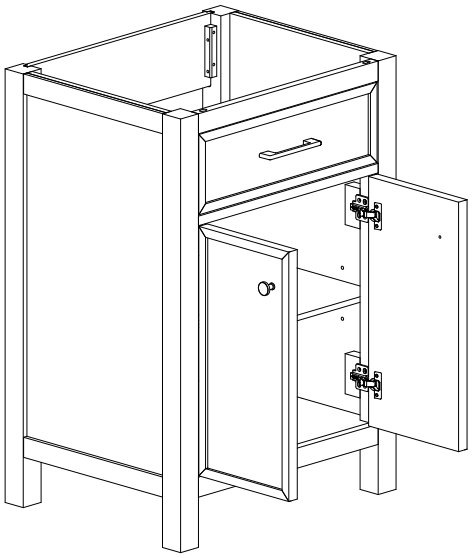

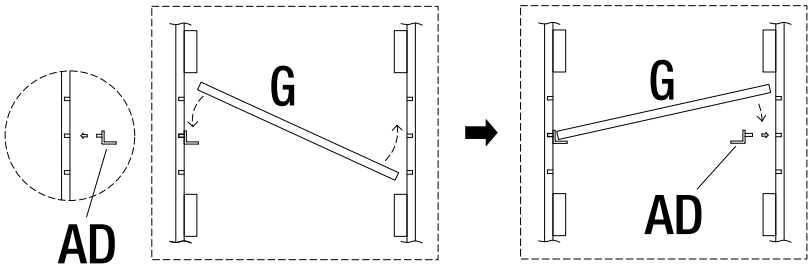

8 Check before use

IMPORTANT:

- □ Before use, use a rubber mallet and wooden pad to tap all locations with connectors to ensure they lock together tightly.
- □ The wooden pad helps avoid damaging the product.

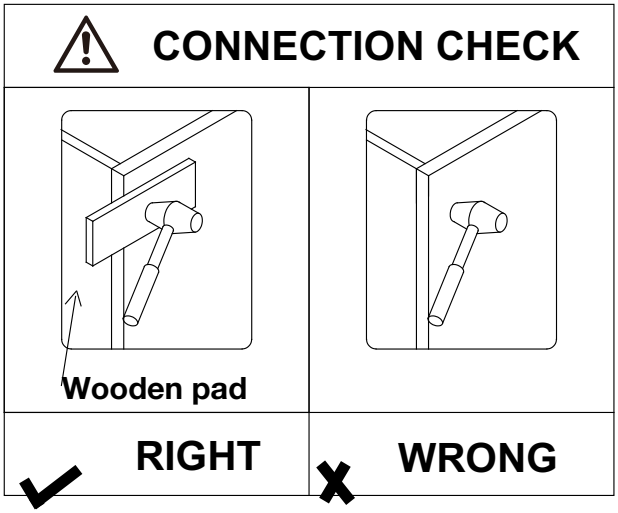

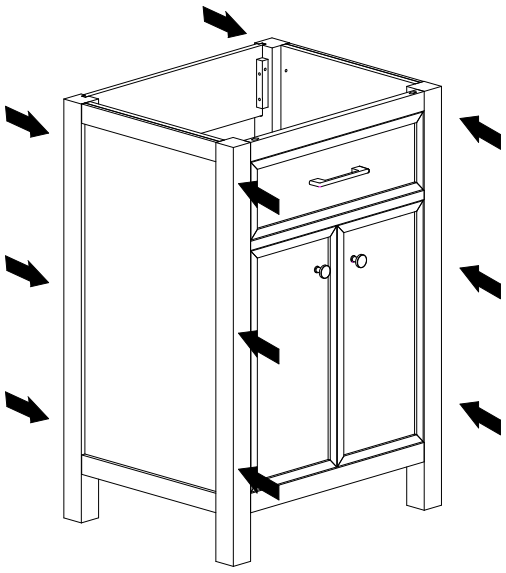

9 Position the vanity

- □ Place the vanity in the desired position taking into account the location of your plumbing.
- □ Verify that the vanity is level and plumb against the wall. If necessary, turn the leg levelers to adjust the unit.

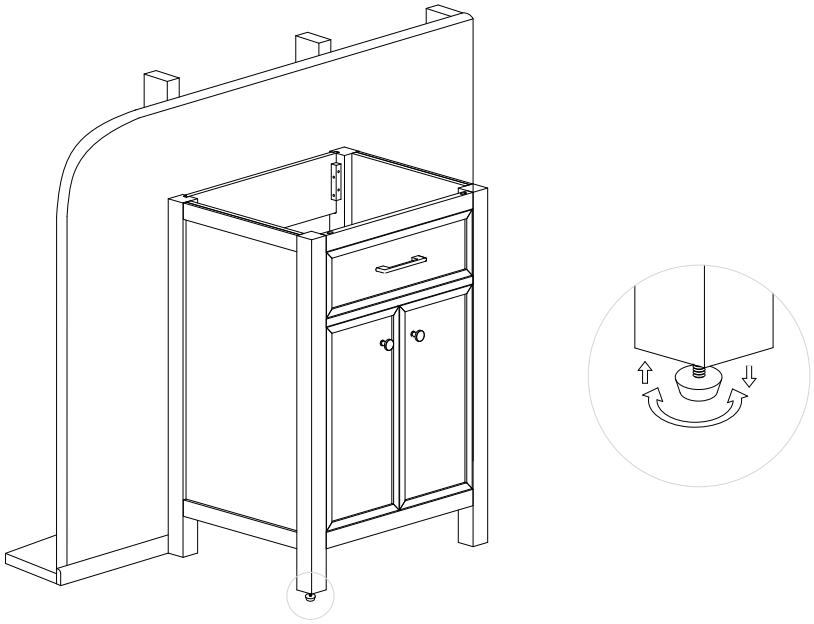

10 Install the countertop

- □ Apply lines of sealant onto the top of vanity.
- □ Carefully place the countertop (H) on the vanity, verify that the countertop (H) is in proper position.

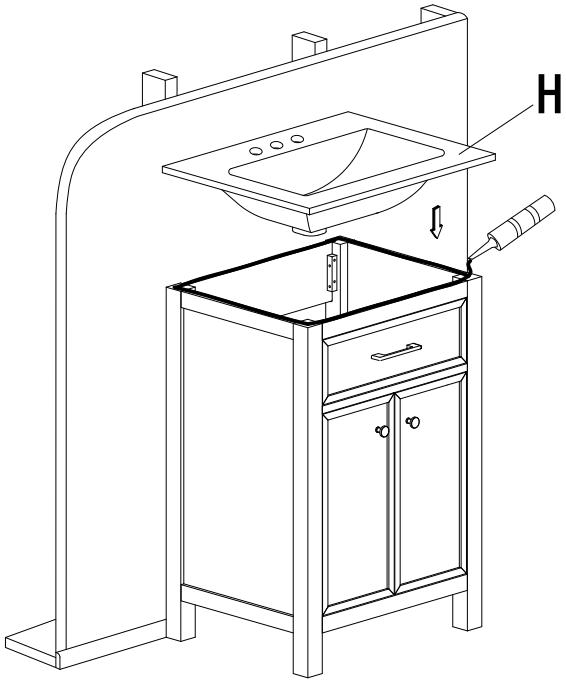

11 Seal the countertop

- □ Apply a bead of neutral cure silicone sealant (not included) along the seam of the wall and the edge underneath the countertop (A) where it meets the vanity top trim.
- □ Clean any excess sealant before allowing to dry. Allow the vanity to dry for 24 hours before use.

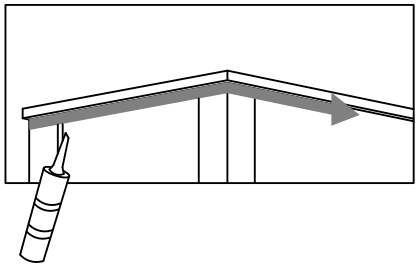

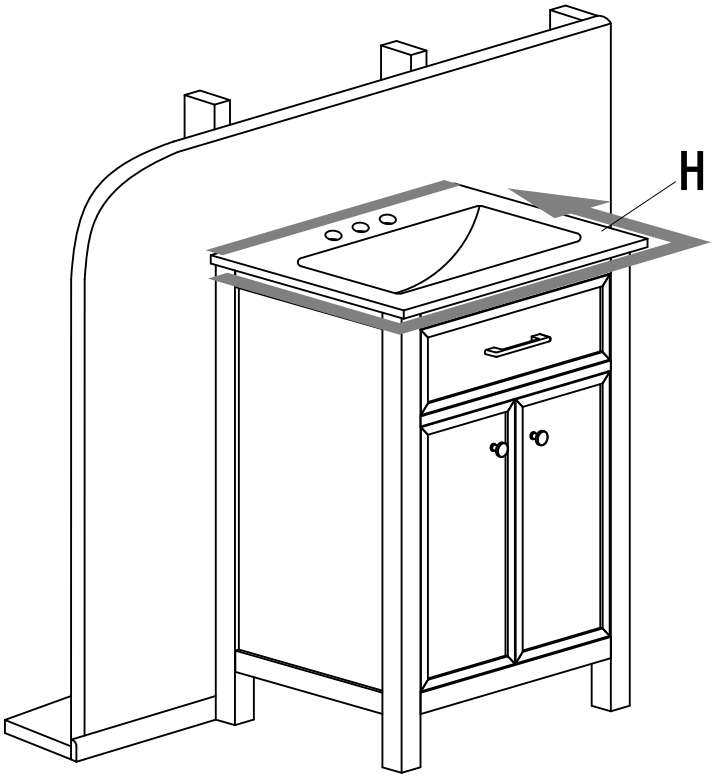

24H!

Assembly(continued)

12 Adjust the door

- □ Adjust door in or out, loosen screws (A), adjust door and retighten screws.
- □ Adjust door left and right, turn screw (B) in or out.
- □ Adjust door up or down, loosen screws (C), adjust door and retighten screws.

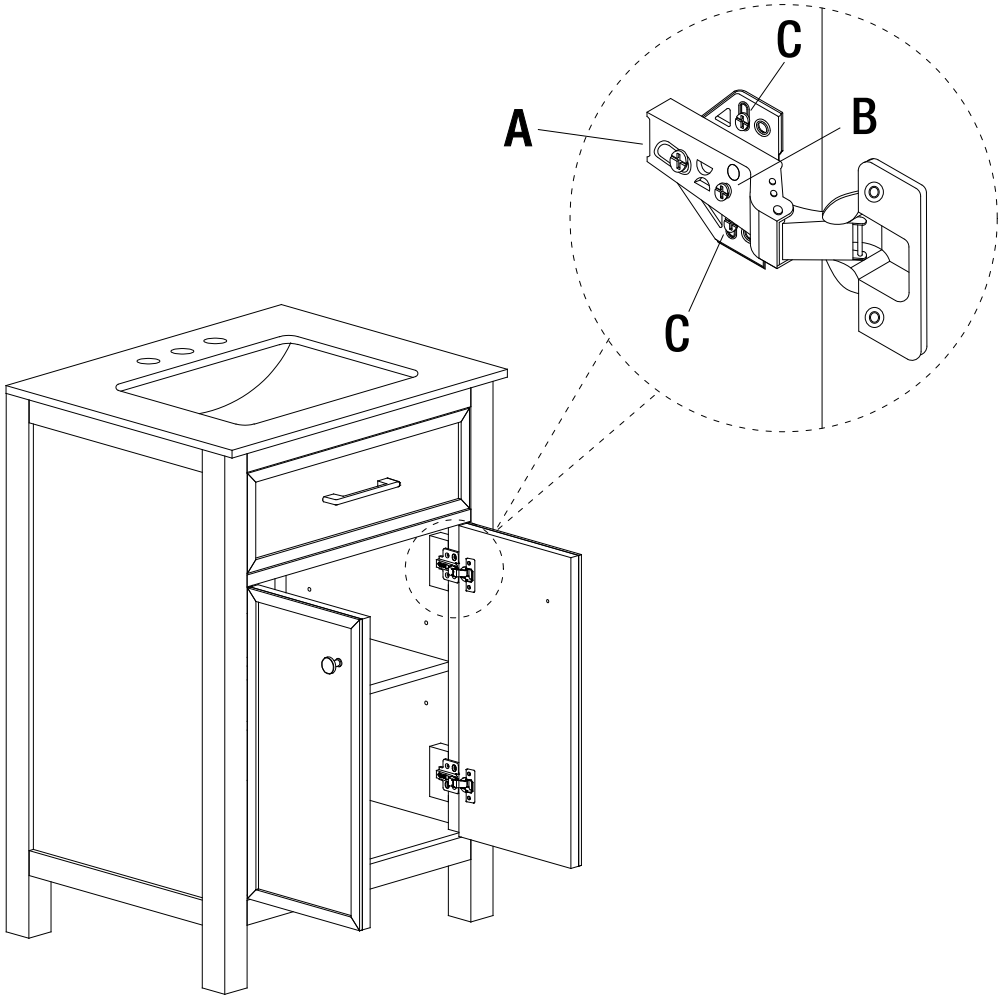

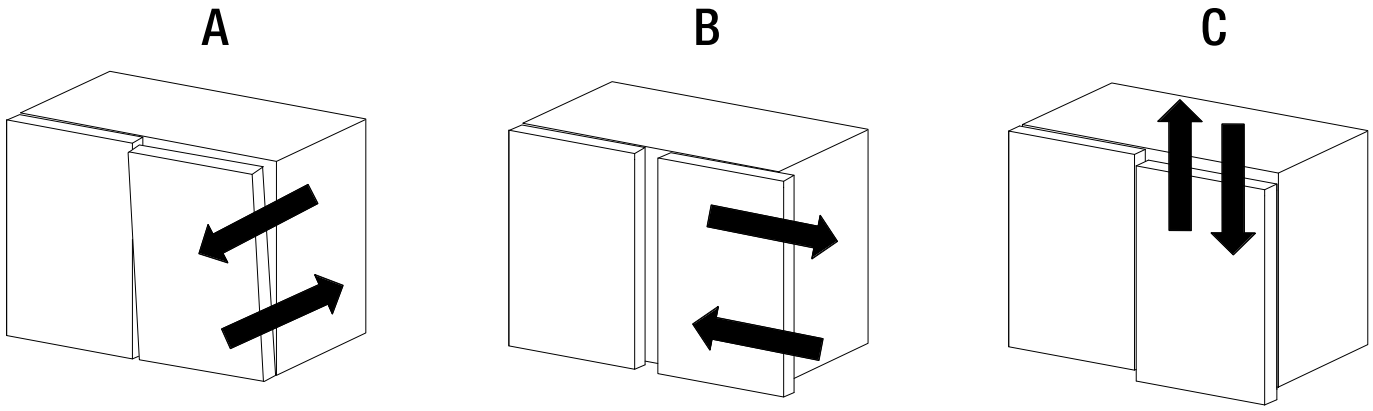

Maintenance

- To maintain the beauty of the furniture finish, avoid placing the vanity in direct sunlight.
- Avoid exposing the vanity combo to extreme temperatures by installing away from heat and air vents.

Care and Cleaning

Countertop Care

- Rinse vanity top with clean and hot water when needed.
- Blot spills quickly, and wash with mild soap and warm water.
- Clean the surface with a glass cleaner or other household cleansers that are non-abrasive.
- Remove oil-based stains with acetone, mineral spirits, or ammonia.
- Organic stains like coffee, tea, or juice can be removed with hydrogen peroxide, mixed with a few drops of ammonia.
- Water spots or rings can be removed by buffing the spots gently with 00-gauge steel wool.
- Small nicks and scratches can often be removed the same way.
- Larger scratches, chips, and resilient stains may require professional help. Please contact your local stonemason for details.
- The vanity top is sealed at the factory, but reapplication is necessary over time. How often is determined by the quality of the sealer used, and the frequency of use. We recommend using a penetrating non-toxic sealer for best results.

Cabinet Care

- Dust the vanity frequently with a clean, soft, dry, lint-free cloth and polish it regularly.
- Clean up excess water and spills immediately. Use a blotting rather than a wiping action. Water left over for a long period of time can cause white spots in the finish.
- Clean the surface by rubbing in the direction of the grain. Use furniture cleaners or polishes recommended by your local hardware store, following manufacturer's application and cleaning instructions. Avoid using silicone cleaners and waxes.

GLACIER BAY®

Questions, problems, missing parts? Before returning to the store,
call Glacier Bay Customer Service.
8 a.m. – 7 p.m., EST, Monday – Friday, 9 a.m. – 6 p.m., EST, Saturday

1-855-HD-GLACIER (1-855-434-5224)

HOMEDEPOT.COM / GLACIERBAY

Retain this manual for future use.