JSonic

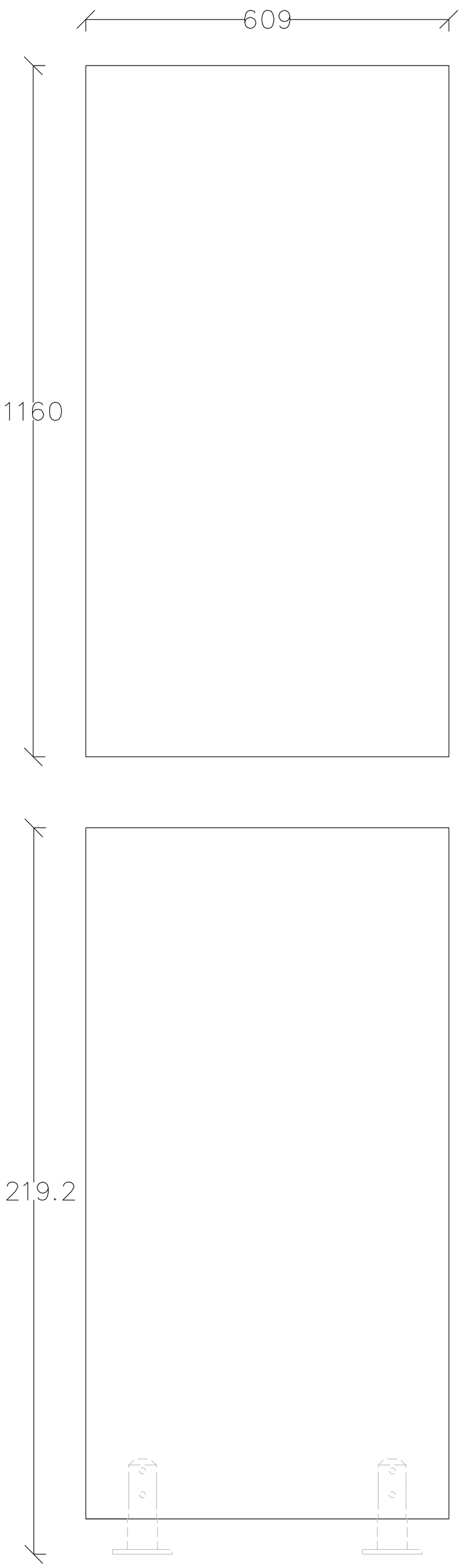

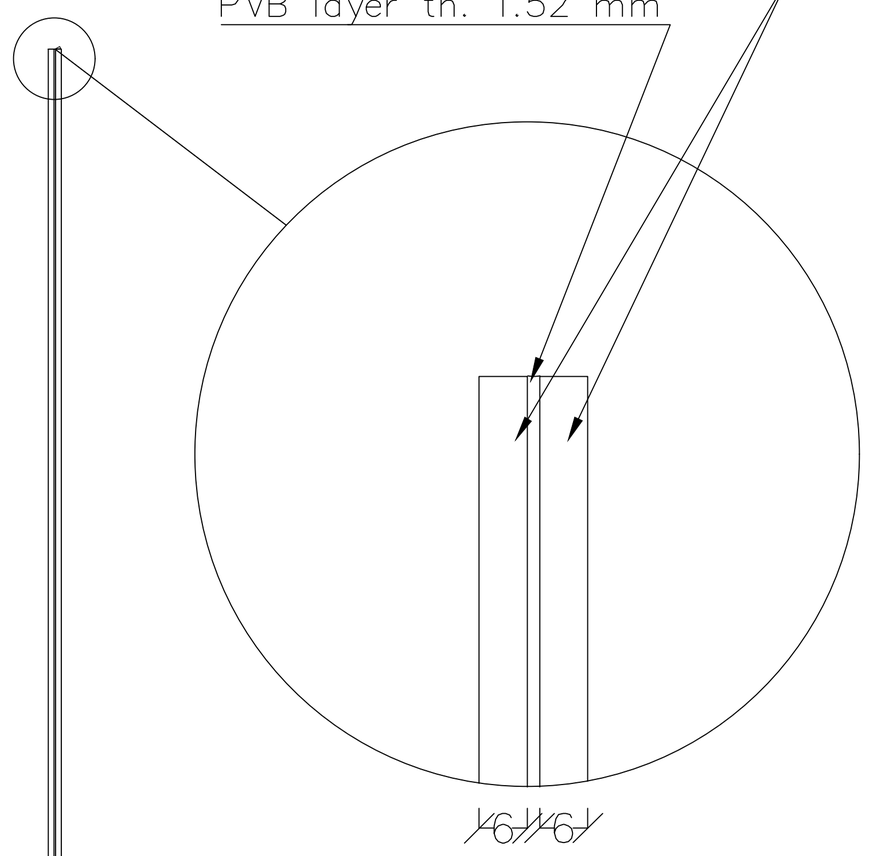

STAINLESS STEEL SPIGOT DETAIL

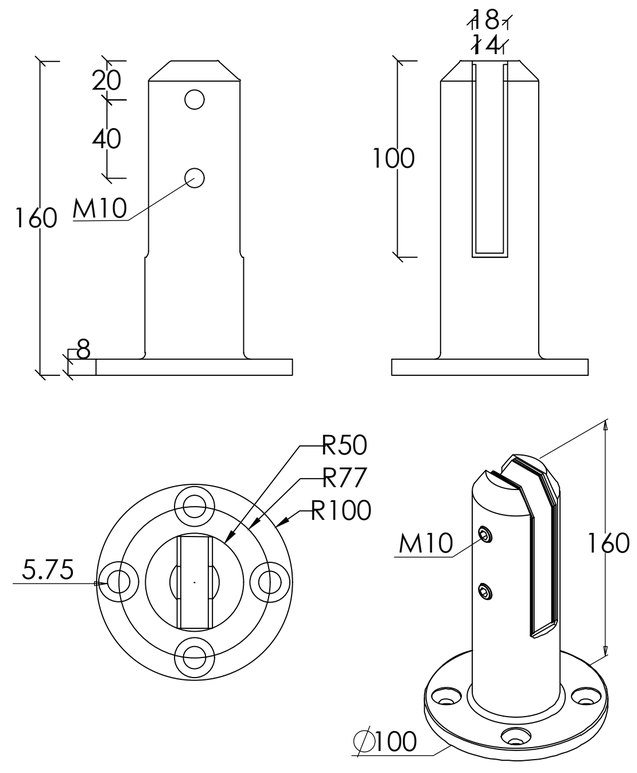

SCREWS

TYPE	QUANTITY
3/8 x 3 Anchor	8
3/8 x 2	4

NOTE:
THE SPIGOTS ARE TO BE SOLD SEPARATELY.

NOTES:

1. INSTALLATION TO BE COMPLETED PER MANUFACTURER'S SPECIFICATION.
2. THIS DRAWING IS PROVIDED FOR PLANNING PURPOSES. REFER TO MANUFACTURER'S INSTALLATIONS FOR CONSTRUCTION DETAILS.
3. REFER TO LOCAL BUILDING CODES PRIOR TO INSTALLATION.
4. DRAWING NOT TO SCALE.

