DO NOT remove the protective film from the appliance until installation is complete—this helps prevent damage or scratches to the stainless steel, glass, or porcelain surfaces.

⚠ **WARNING:** NEVER lift the range by the oven door handle. Doing so may lead to personal injury or damage to the door and handle, which may void the warranty.

How to Install Your Range

When you've completed all the preparation steps, you're ready to install your range.

1. TEST THE UNIT

Plug the unit into an outlet and press the touch panel to make sure that the unit is working.

⚠ **IMPORTANT:** If the range hood is not working properly, please contact us immediately (**1-800-929-0168** / **info@hauslane.com**).

⚠ **DANGER: TIPPING RANGES CAN CAUSE SERIOUS INJURY OR DEATH.**



TO PREVENT THIS:

The range MUST BE secured with a properly installed anti-tip bracket.

Failing to attach the anti-tip bracket to the wall correctly can result in fatal injury to a child or adult.

HOW TO CHECK ANTI-TIP INSTALLATION

To prevent tipping, the anti-tip device MUST BE properly installed. Secure it to the wall or the range as instructed in the installation manual. Then, tilt the front of the range slightly upward and slide it back into its final position, ensuring that the mounting pins slide under the brackets.

⚠ **IMPORTANT:** DO NOT operate the range without the anti-tip device engaged. Failure to follow this instruction can result in serious injury or death.

After moving or repositioning the range, ALWAYS re-engage the anti-tip device by following the steps outlined on **page 26** of the installation manual.

To test the anti-tip installation, gently pull the range from the back. If installed correctly, the range should not tip forward more than 4″ (102 mm) from the wall. If it tips more than that, the anti-tip bracket is not properly secured and must be corrected before using the appliance.

⚠ **DANGER:** DO NOT allow the range to tip more than 4″ (102 mm) from the wall — it may fall forward and cause injury.

IMPORTANT INSTALLATION TIPS:

NEVER remove the leveling legs — the anti-tip device relies on them to secure the unit.

NEVER stand or sit on the oven door.

The range is designed not to tip under normal use.

However, if the anti-tip bracket is missing or loose, applying weight to an open door can cause the entire unit to tip forward.

2. INSTALLING PARTS

BURNER SPREADS AND CAPS

After unpacking the range, set the cast iron grates aside and remove the burner spreads and caps from the storage area beneath the grates.

Place each burner spread on the correct burner, ensuring the hole fits securely over the white metal electrode spark tip. Then place the burner cap on top until it sits snugly.

If burner spreads (B) or caps (A) are not correctly positioned, burners may fail to ignite or ONLY ignite partially, as shown below:

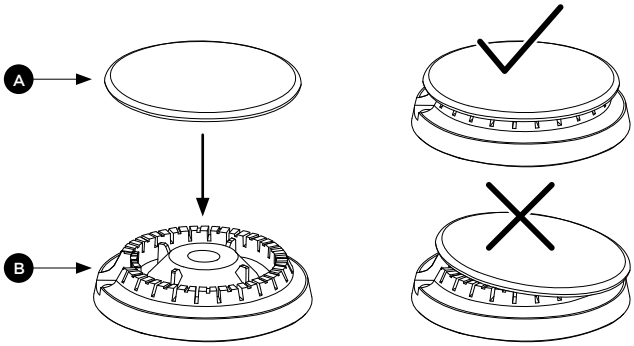

CAST IRON GRATES

Place the cast iron grates on the cooktop, being careful not to scratch the porcelain surface. Each grate has rubber feet and aligns with slots on the cooktop.

The PRG48 model includes a reversible enameled cast iron griddle. It should be placed vertically (front to back) over any of the four grates. DO NOT place it horizontally (side to side) across multiple grates.

KNOBS

1. PRG30 RANGE KNOBS (5 TOTAL)

To install the knobs, align each in the "**OFF**" position and press it straight onto the valve stems extending from the front of the cooktop, as shown at right.

The oven knob installs on the center valve, with burner knobs placed on either side. The dual function knob goes on the far right.

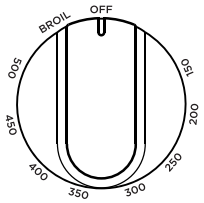

Oven Knob (1)

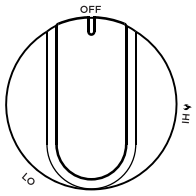

Single Ring Burner Knobs (3)

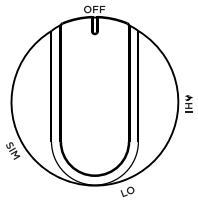

Dual Rings Burner Knobs (1)

⚠ **WARNING:** The PRG30 and PRG36 ranges come with 1 brass dual function burner, and the PRG48 range includes 2 brass dual function burners. The burner knobs for those include a "**SIM**" setting, as outlined in the images below.

2. PRG36 RANGE KNOBS (7 TOTAL)

The oven knob installs on the center valve, with burner knobs placed on either side.

The dual function knob installs on the far right side of the range.

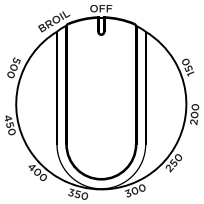

Oven Knob (1)

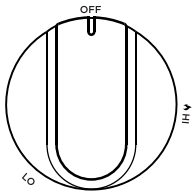

Single Ring Burner Knobs (5)

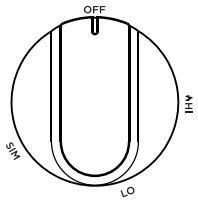

Dual Rings Burner Knobs (1)

3. PRG48 RANGE KNOBS (10 TOTAL)

The oven knobs attach to the two center single valves—the small oven knob on the left and the large oven knob on the right. Place individual burner knobs on either side of the oven knobs. One dual function knob goes directly to the left of the small oven knob, and the other goes on the far right side of the range.

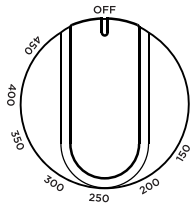

Small Oven Knob (1)

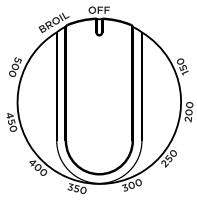

Large Oven Knob (1)

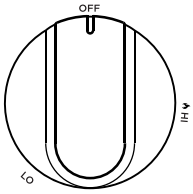

Single Ring Burner Knobs (6)

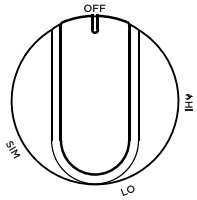

Dual Rings Burner Knobs (2)

INSTALLING THE HANDLE



To install the oven door handle, align each bracket with the pre-installed mounting studs on both sides of the oven door, as shown in Figure 1 below.

Once aligned, locate the screw holes on the underside of each bracket base. Using the provided 7⁄64" (3 mm) Allen wrench or hex key, tighten both screws until the handle is securely in place, as shown in Figure 2 below.

If installed properly, the handle should sit perfectly level.

⚠ **NOTE:** While the diagram shows the PRG36 model, the handle installation process is the same for PRG30 and PRG48 ranges.

⚠ **WARNING:** Use care to not overtighten, or you risk stripping the screws and then your handle may be unstable or fall off, increasing the risk of injury or burns.

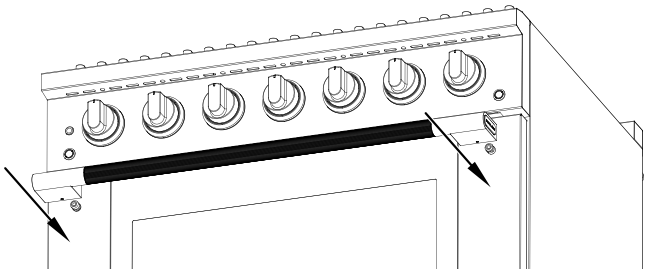

Figure 1

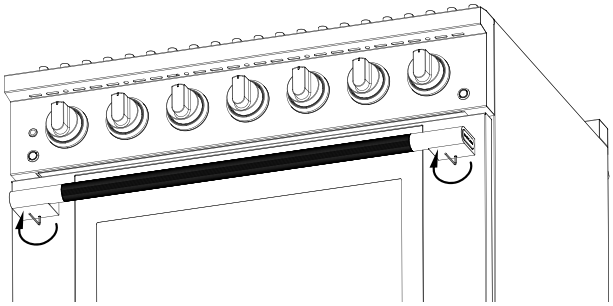

Figure 2

3. GAS CONNECTION REQUIREMENTS

This range is factory set to operate on natural gas (NG). If you intend to use liquid propane gas (LPG), the conversion MUST BE completed by a qualified installer before operating the appliance.

All gas connections must comply with national and local building codes. When using a flexible gas line connector, make sure the range is positioned so that it can connect easily to the manual shut-off valve.

⚠ **DANGER: MANUAL GAS SHUT-OFF VALVE REQUIRED**

The gas supply line must include an approved manual shut-off valve.

The shut-off valve must be easily accessible, located in the same room as the appliance.

DO NOT block access to the shut-off valve.

Be sure you know how and where to turn off the gas in case of emergency.

⚠ **IMPORTANT:** The pressure regulator, located at the gas inlet of the appliance, MUST remain in the supply line regardless of whether you are using natural gas or liquid propane.

The regulator is shipped with a clear plastic shield covering the inlet to prevent debris. This shield must be removed before connecting the gas line or coupler.

A flexible metal appliance connector should not exceed 3 feet (36 inches or 914 mm) in length for proper installation. In Canada, flexible connectors must be single-wall metal and less than 6 feet (1829 mm) in length.

⚠ WARNING: EXPLOSION HAZARDS

Read all safety precautions on **pages 1 to 6** before beginning installation.

ONLY use a CSA-approved gas supply line.

Install an approved manual shut-off valve.

Securely tighten all gas connections.

For liquid propane (LPG) installations, a qualified person must verify that the gas pressure does not exceed 3.5 kPa (14 inches W.C.P.). Qualified persons may include licensed heating professionals, gas company personnel, or authorized service technicians.

Failure to follow these instructions may result in fire, explosion, or death.

GAS INSTALLATION STEPS

1. Shut off the main gas supply before removing an existing appliance (if applicable). Leave it off until the new range is fully installed. DO NOT forget to relight pilot lights on any other gas appliances after restoring gas service.
2. Use a flexible metal connector (CSA-certified) to allow for movement, unless your local codes require hard piping.
   - NEVER reuse an old gas connector.
   - If using hard piping, carefully align all fittings.
   - Use pipe-joint compound rated for natural gas on all male pipe threads.
3. Connect the flexible gas line to the ½" regulator fitting located on the bottom left corner of the range (rear view).
4. Once connected:
   - Make sure all range controls are in the **OFF** position.
   - Turn on the main gas supply valve.
   - Check for leaks using a 75% water / 25% dish soap solution.
   - If bubbles appear, shut off the gas, tighten all connections, and retest.

⚠ **WARNING:** ALWAYS connect the gas line through the ½" fitting on the side of the pressure regulator, as shown in the diagram on the next page.

DO NOT remove the regulator access cap to connect gas. This cap is used only for:

- Liquid propane (LP) conversions
- Pressure adjustments

The regulator access cap MUST stay on at all times and should only be hand-tightened. Removing or tampering with this cap outside of its intended use may result in unsafe operation.

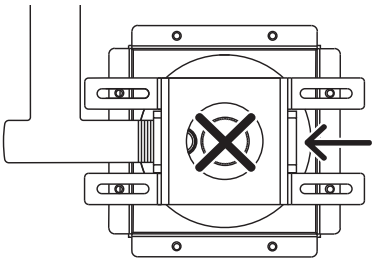

Regulator Location and Connection Notes

On all PRG series ranges, the pressure regulator is located at the bottom right corner when facing the front of the unit.

- From the rear view, the regulator appears on the bottom left.
- The diagram on the next page shows:
- Proper gas hookup flow
- Fitting locations
- Required parts for connection

⚠ **NOTE:** The regulator and access cap are factory-installed. Other connection components, such as flare unions, shut-off valves, and flexible connectors, MUST BE supplied by the installer or customer.

⚠ **IMPORTANT:** The regulator access cap is used ONLY for liquid propane (LP) conversion or pressure adjustment. It is not for gas hookup. The cap should always be hand-tightened and remain in place during installation and operation.

SAFETY AND EXPLOSION HAZARDS

Read all safety precautions on **pages 1 to 6** before proceeding.

NEVER use an open flame to check for gas leaks. Doing so may result in a fire or explosion.

Tighten all connections securely to prevent leaks in the appliance or the gas supply line.

After connecting the gas line:

- Check that the control knobs align properly with their valve stems. Misalignment could mean the manifold pipe has shifted, which may cause the valve stems to rub against the control panel and create a gas leak.

During pressure testing:

- During any test pressure equal to or less than ½ psig (3.5 kPa), the appliance and it's shut off valve must disconnected from the main gas line.

Refer to the gas hookup diagram on the next page for proper connection flow and fitting locations. The pressure regulator and its access cap are pre-installed. All other gas connection components MUST BE supplied by the customer and installed by a qualified technician to ensure a safe and compliant installation.

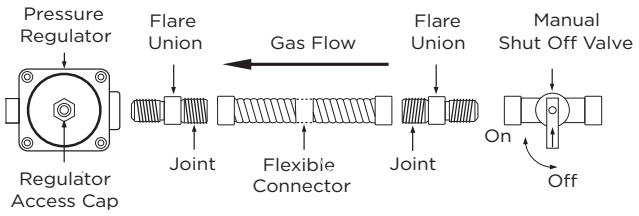

4. LIQUID PROPANE CONVERSION PROCEDURE (OPTIONAL)

⚠ CAUTION: SHUT OFF GAS AND POWER FIRST

Before beginning the conversion:

- Turn off the gas supply to the appliance
- Then disconnect the electrical power
- DO NOT attempt the conversion while the appliance is connected to either gas or electricity.

⚠ IMPORTANT NOTES

If you plan to use liquid propane (LPG), the conversion MUST BE completed before installing the anti-tip device.

If you're using factory-installed natural gas and DO NOT need to convert to propane, you can skip ahead to **page 24**.

Your appliance comes with a conversion kit. Be sure to use the correct one based on your model:

PRG30: LPC-30KT

PRG36: LPC-36KT

PRG48: LPC-48KT

⚠ WARNING: SAFETY MEASURES

Read all safety precautions on **pages 1–6** before proceeding.

The conversion MUST BE completed by a qualified service technician, following both the kit instructions and local codes.

Skipping this conversion when using LPG may result in serious injury or property damage.

The service agency performing the conversion is responsible for its accuracy and safety.

Once converted, the LPG gas supply MUST provide:

Minimum: 2.5 kPa (10" W.C.P.)

Maximum: 3.5 kPa (14" W.C.P.)

⚠ WARNING: QUALIFIED INSTALLATION REQUIRED

This conversion kit MUST BE installed by a qualified service agency in full accordance with:

- The manufacturer's instructions
- All applicable building codes and regulations

If these instructions are not followed exactly, the result may be:

- Fire
- Explosion
- Carbon monoxide production
- Serious injury or loss of life

The installation is not complete until the converted appliance has been tested and verified for proper operation as described in the conversion kit instructions.

CHECKING MANIFOLD PRESSURE

A licensed technician should check manifold pressure using:

- Their own manometer
- A Hauslane-supplied test point adapter
- ¼" (6 mm) tubing

The figure references the PRG36 range, but the procedure is the same for all PRG models.

To perform the test:

1. By hand, remove the burner spread and burner cap from either the rear left or front left burner on the cooktop.
2. Using a 9⁄32" (7 mm) nut driver or wrench, remove the gas orifice from the bottom of that burner.
3. Insert the test point adapter into the orifice hole.
4. Turn the burner control knob to the "**HI**" position.
5. While pressing and holding the knob, use the manometer to check the pressure.

TARGET MANIFOLD PRESSURES:

Natural Gas: 1.2 kPa (5 inches W.C.P.)

Liquid Propane Gas: 2.7 kPa (11 inches W.C.P.)

The upstream line pressure must be at least 0.25 kPa (1 inch W.C.P.) higher than the manifold pressure for an accurate reading.

The pressure regulator on this appliance can safely accept up to 3.5 kPa (½ PSI or 14 inches W.C.P.) of input pressure. If the line pressure exceeds this value, a step-down regulator MUST BE used.

⚠ CAUTION: TEST ONLY SIDE BURNERS

DO NOT perform pressure testing on dual function burners. ONLY use one of the far-left burners on the range for accurate pressure readings.

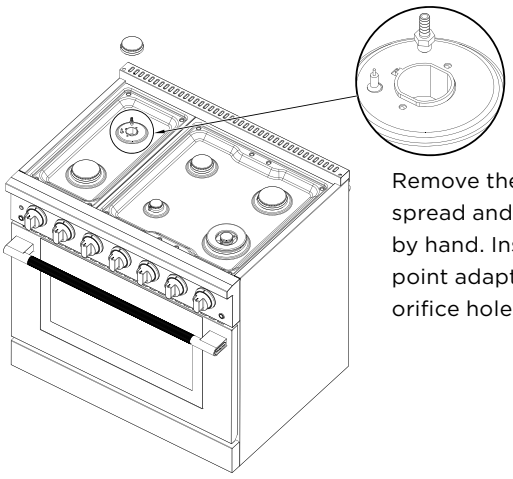

Remove the burner spread and burner cap by hand. Insert the test point adapter into the orifice hole.

⚠ If your LP conversion kit did not include the test point adapter or ¼" tubing, contact Hauslane Customer Experience at **1-800-929-0168** for assistance.

⚠ **DANGER:** ALWAYS disconnect electrical power to the appliance before performing any service. Failure to do so may result in shock, fire, or death.

STEPS TO ADJUST THE REGULATOR FOR PROPANE USE:

Shut off the gas supply by closing the manual shut-off valve. Purge the gas line by pressing the range knobs several times — this ensures no gas remains in the system.

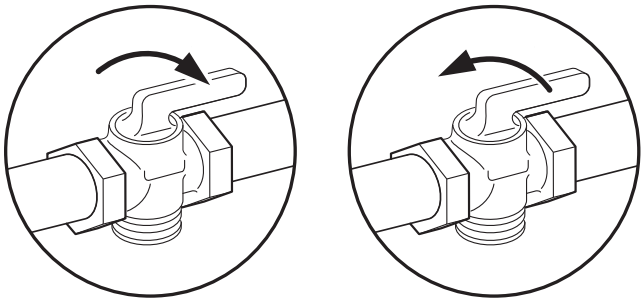

Unscrew the regulator access cap by hand or with a suitable pipe wrench (refer to diagram).

Remove the regulator pin (See diagram below):

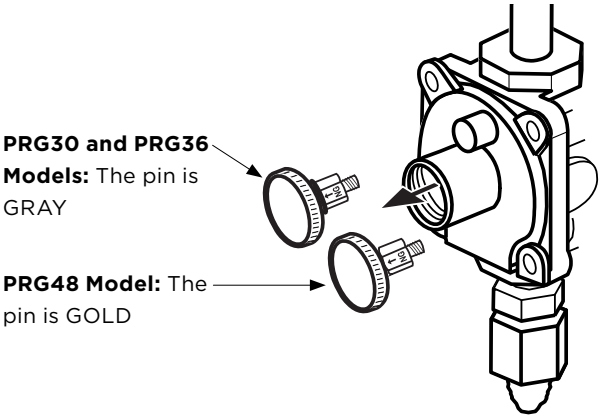

You'll reinstall this pin in the correct position based on your gas type — the next section will guide you through it.

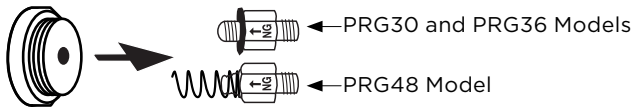

For PRG30 and PRG36 models, locate the gray regulator pin. It is not attached to a spring. Unscrew the pin, flip it over, and screw it back into the regulator cap as shown in the diagrams. For PRG48 model, the gold regulator pin is attached to a spring. Unscrew the pin, reverse it, and screw it back into the regulator cap. Make sure the spring fits snugly when tightening to ensure proper pressure regulation.

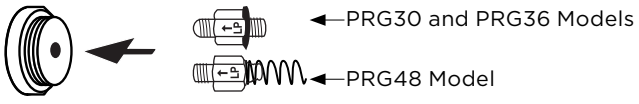

Once the pin is reversed, screw the regulator access cap back into the regulator body. Then reconnect the regulator to the nipple and flare union as illustrated. DO NOT overtighten.

⚠ **NOTE:** The pressure regulator and cap come pre-installed on your unit. All other gas connection parts shown in the diagram (flare unions, shut-off valve, etc.) MUST be supplied by the customer for a qualified installer to complete the hook-up safely.

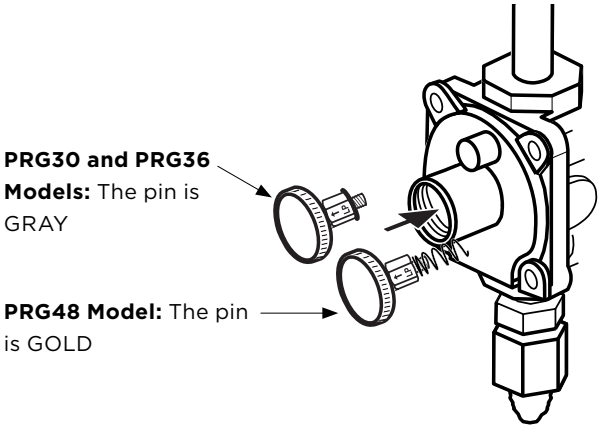

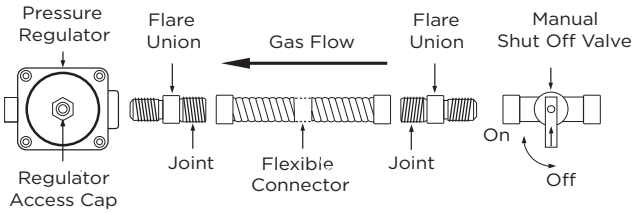

CHANGING BURNER ORIFICES

First, remove the burner grates, burner caps, and burner spreads. Then use a 9⁄32" (7 mm) nut driver or wrench to unscrew the existing natural gas orifices. Each orifice is labeled for its correct location, so read the labels carefully before replacing.

Replace each with the matching liquid propane orifice. DO NOT force or overtighten the orifices, as this can damage the burner base and affect flame performance.

For dual burners, there are three orifices per burner. One is in the center and two are located on the sides. Use a 9⁄32" (7 mm) wrench to remove and replace the side orifices as well.

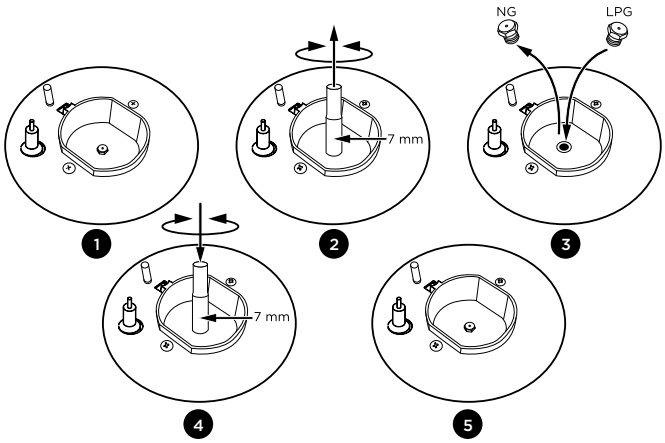

⚠ **WARNING: HANDLE GAS COMPONENTS WITH CARE**

Save all removed natural gas orifices — you will need them if converting back to NG in the future.

Be careful when handling metal components, especially sharp or threaded parts.

Use proper tools and support to avoid damaging the appliance during conversion.

LIQUID PROPANE CONVERSION (CONTINUED) ORIFICE NUMBERS

⚠ **INSTALLATION TIP:** To help prevent any mix-ups during installation, it's best to remove all existing natural gas (NG) orifices first, and then install the liquid propane (LPG) orifices.

⚠ **IMPORTANT:** Each orifice has a number indicating its flow diameter printed on the body. You MUST install the correct orifice in the exact location as noted in the illustrations and the orifice table below for the **PRG30 MODEL**.

⚠ **NOTE:** For dual burners **(A)**, make sure to replace all three orifices: one in the center and two on the sides.

PRG30 ORIFICES				
Burner Layout	**Burner**	**LPG (Orifices)**	**NG**	**LPG**
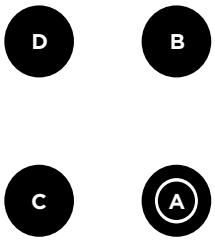	A	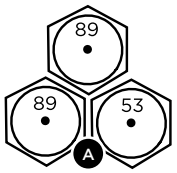	1.36 (2) +0.73	0.89 (2) + 0.53
	B	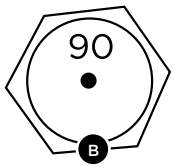	1.36	0.90
	C	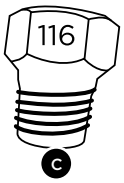	1.79	1.16
	D	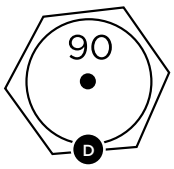	1.36	0.90
	Oven Broil	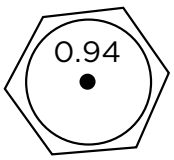	1.42	0.94
	Oven Bake	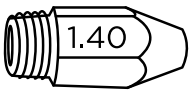	2.13	1.40

LIQUID PROPANE CONVERSION (CONTINUED) ORIFICE NUMBERS

⚠ **INSTALLATION TIP:** To help prevent any mix-ups during installation, it's best to remove all existing natural gas (NG) orifices first, and then install the liquid propane (LPG) orifices.

⚠ **IMPORTANT:** Each orifice has a number indicating its flow diameter printed on the body. You MUST install the correct orifice in the exact location as noted in the illustrations and the orifice table below for the **PRG36 MODEL**.

⚠ **NOTE:** For dual burners **(A)**, make sure to replace all three orifices: one in the center and two on the sides.

PRG36 ORIFICES				
Burner Layout	**Burner**	**LPG (Orifices)**	**NG**	**LPG**
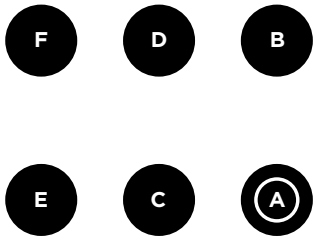	A	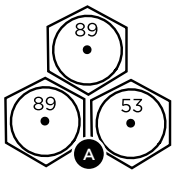	1.36 (2) +0.73	0.89 (2) + 0.53
	B	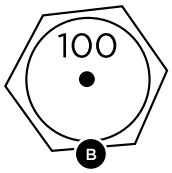	1.57	1.00
	C		1.07	0.74
	D	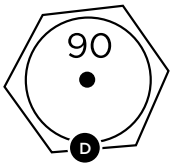	1.36	0.90
	E		1.79	1.16
	F	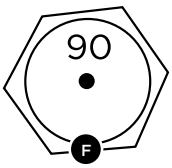	1.36	0.90
	Oven Broil	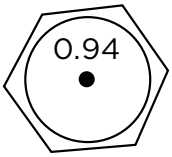	1.42	0.94
	Oven Bake	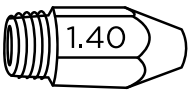	2.13	1.40

LIQUID PROPANE CONVERSION (CONTINUED) ORIFICE NUMBERS

⚠ **INSTALLATION TIP:** To help prevent any mix-ups during installation, it's best to remove all existing natural gas (NG) orifices first, and then install the liquid propane (LPG) orifices.

⚠ **IMPORTANT:** Each orifice has a number indicating its flow diameter printed on the body. You MUST install the correct orifice in the exact location as noted in the illustrations and the orifice table below for the **PRG48 MODEL**.

⚠ **NOTE:** For dual burners **(A and E)**, make sure to replace all three orifices: one in the center and two on the sides.

PRG48 ORIFICES				
Burner Layout	**Burner**	**LPG (Orifices)**	**NG**	**LPG**
H F D B G E C A	A	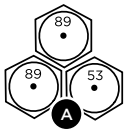	1.36 (2) +0.73	0.89 (2) + 0.53
	B	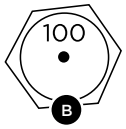	1.57	1.00
	C		1.07	0.74
	D	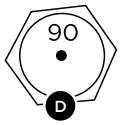	1.36	0.90
	E	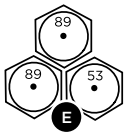	1.36 (2) + 0.73	0.89 (2) + 0.53
	F		1.57	1.00
	G		1.07	0.74
	H	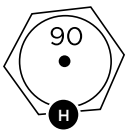	1.36	0.90
	Oven Broil		1.42	0.94
	Large Oven Bake		2.13	1.40
	Small Oven Bake		1.68	1.09

LIQUID PROPANE CONVERSION (CONTINUED)

Changing Upper Oven Orifices: PRG30, PRG36, PRG48 Large Oven

TOOLS NEEDED

- Phillips-head screwdriver or drill bit
- 7 mm socket wrench

1. PREPARE THE OVEN

Open the oven door fully. Remove the oven racks by sliding them out to full extension, then lifting up and out of the sliding mechanism. Set racks aside.

Carefully lift up the bottom drip pan from each front corner and slide it out, taking care not to damage the lower burner spread. Set drip pan aside.

2. REMOVE BURNER SPREAD

Using a Phillips-head screwdriver or drill bit, remove the 8 screws securing the upper broil burner spread (2 screws at the front, 3 screws along each side).

Carefully disconnect the burner vent from the back wall of the oven to access the orifice.

3. REPLACE THE ORIFICE

Use a 7 mm socket wrench to remove the existing natural gas orifice. Set aside the natural gas orifice for future use. Install the liquid propane gas orifice in the exact position. Carefully screw in the new orifice; do not overtighten.

4. REASSEMBLE BURNER

Reposition the burner vent over the new orifice. Re-secure the burner spread with the 8 screws removed earlier.

5. REINSTALL OVEN COMPONENTS

Replace the bottom drip pan carefully. Reinstall the oven racks by sliding them into the guides.

⚠ **IMPORTANT:** Handle parts gently to avoid damaging wires or components connected to the burner vent. Ensure all screws and parts are securely reinstalled before operating the oven.

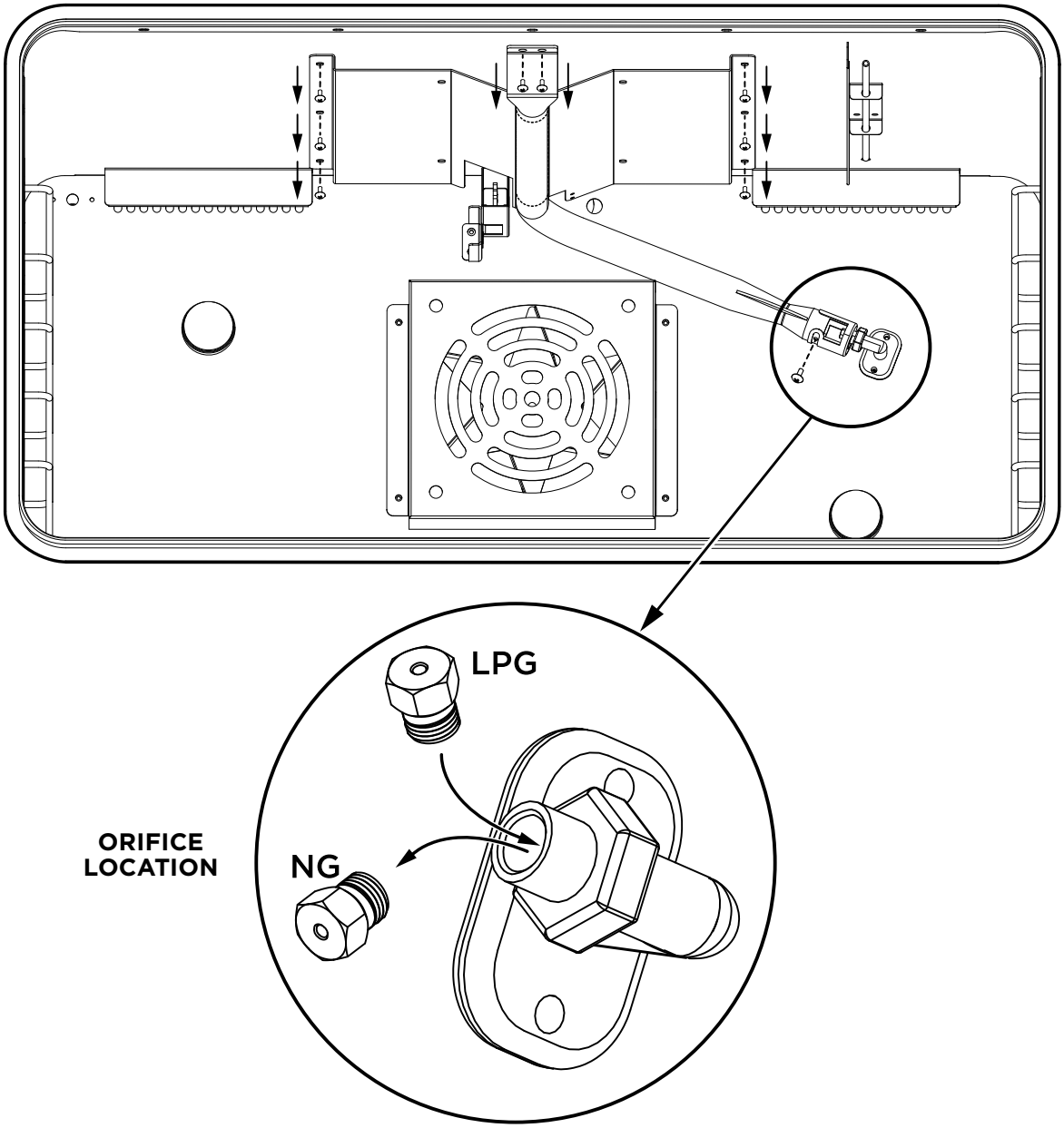

LIQUID PROPANE CONVERSION (CONTINUED)

Changing Lower Oven Orifices: PRG30, PRG36, PRG48 Large and Small Oven

⚠ **WARNING:** Be careful not to scratch or damage the connection wire that remains connected throughout this procedure for the lower burner spread.

TOOLS NEEDED

- Phillips-head screwdriver or drill bit
- 10 mm socket wrench

1. REMOVE THE KICK PLATE

Remove the three screws securing the kick plate (one on each side and one in the center). Lift the kick plate and pull it out from the side slots.

2. REMOVE THE LOWER BURNER ORIFICE HOLDER

Using a 10 mm socket wrench, remove the orifice holder along with the natural gas orifice. Access it from the front of the unit, where it is mounted to the support bracket.

3. REPLACE THE ORIFICE

Use a 10 mm socket wrench to remove the existing natural gas orifice and set it aside for future use.

Install the liquid propane gas orifice in the same location. Carefully screw in the new orifice and avoid over-tightening.

4. REASSEMBLE BURNER

Using a 10 mm socket wrench, reposition the orifice holder onto the support bracket and ensure it is secured in its original position.

5. REINSTALL THE KICK PLATE

Carefully place the kick plate back into position. Reinstall the screws to secure the panel and avoid over-tightening.

⚠ **IMPORTANT:** Handle parts gently to avoid damaging wires or components connected to the burner vent. Ensure all screws and parts are securely reinstalled before operating the oven.

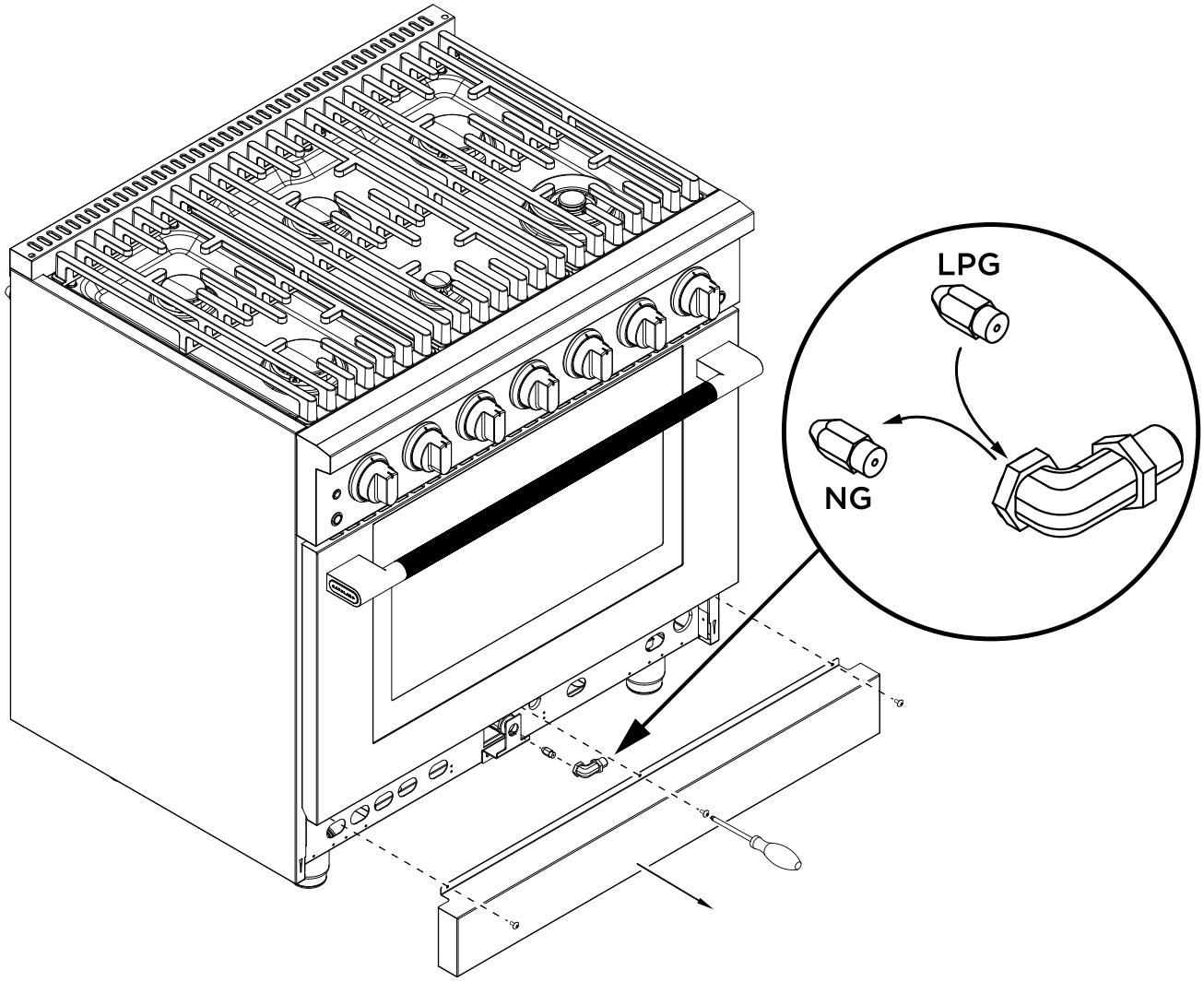

⚠ **NOTES:** The diagrams provided detail the lower burner spreads for PRG30 and PRG36 series ranges, and the larger oven on the PRG48 model.

The PRG48 small oven's lower burner spread looks slightly different, but the orifice replacement process is the same.

The PRG48 small oven does not have an upper broil burner, so no upper orifice replacement is needed for liquid propane conversion.

⚠ **IMPORTANT:** After completing the conversion, check all piping connections for leaks using a soap solution (75% water, 25% dish soap). Tighten any connections if leaks are found.

INSTALLING THE ANTI-TIP BRACKET

⚠ **DANGER:** A child or adult can be seriously injured or killed if the range tips forward. DO NOT operate the appliance without the anti-tip device in place. Failure to install it properly can result in death or serious burns.

STEP-BY-STEP INSTALLATION INSTRUCTIONS

1. Position the range in its cabinet space. Adjust the leveling feet to the desired height. Slide the range forward slightly to access the back wall.
2. Attach the anti-tip brackets to the wall:
   - Drill two holes per bracket
   - Secure with the 4 included screws
   - The mounting side of the bracket must face the cabinet
   - For concrete or tile walls, use the included anchors — tap them in first with a hammer, then install screws
3. Set bracket height by measuring from the floor to the bottom of each side panel (see manual diagrams).
   - Use a level to ensure both brackets are installed evenly.
4. Install the mounting pins:
   - These are included in your anti-tip kit
   - Screw one pin into each side of the oven base recess, left and right
5. Recess width reference by model:
   - **PRG30:** 28 ¼″ (718 mm)
   - **PRG36:** 34 ¼″ (870 mm)
   - **PRG48:** 46 ⅛″ (1172 mm) **NOTE:** Cabinet dimensions may vary, so measure carefully before securing the brackets.
6. Slide the range back into place:
   - Slightly tilt the front of the range upward, then push it gently toward the wall
   - Make sure each mounting pin slides under its bracket

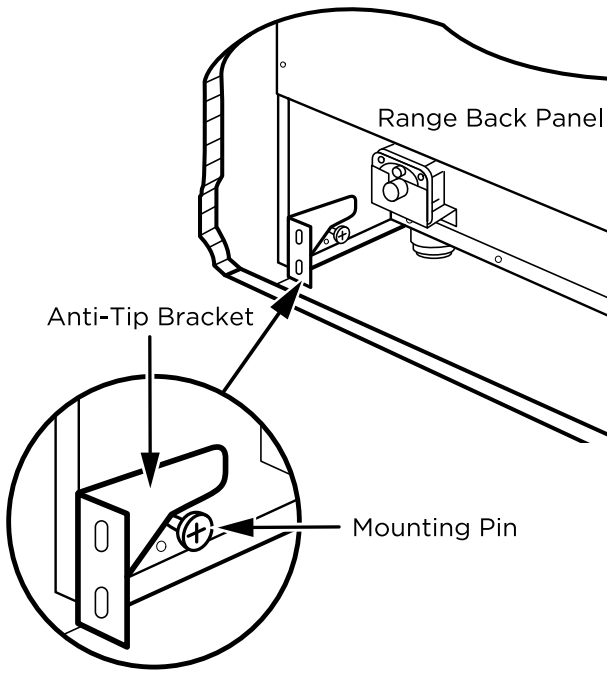

⚠ **WARNING:** Gently pull the range from the rear. If the anti-tip device is correctly installed, the mounting pins will catch on the brackets, and the range will not tip more than 4″ (102 mm) from the wall.

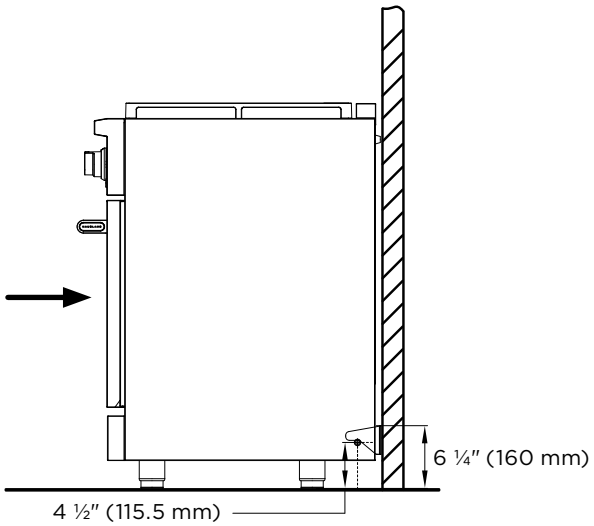

FINISH INSTALLATION

1. Once the gas connection and anti-tip brackets are securely installed, plug the range's NEMA 14-50 electrical cord into a properly grounded 4-prong outlet.

⚠ **WARNING:** The outlet must remain easily accessible after installation. The power supply cord MUST NOT exceed 122°F (50°C) above room temperature at any point.

2. Slide the range into its final position.
3. Check the anti-tip installation by gently pulling on the back of the range. It should not tip more than 4″ (102 mm).
4. Install the burner spreads by aligning each one so the white spark tip fits into the hole in the spread.
5. Place the burner caps snugly and level on top of each spread.
6. Carefully place the grates on the cooktop. Avoid scratching the burner caps, burner spreads, or porcelain surface.
7. Use a level to adjust the front and / or rear feet until the range is flush with your countertop and fully level. A level appliance helps prevent uneven cooking or baking.
8. After completing all connections:
   - Make sure all burner and oven controls are in the "**OFF"** position
   - Turn on the main gas supply valve

⚠ **WARNING:** It may take a few minutes for gas to flow freely after connection. You may need to try lighting the burners or oven a few times. Refer to the User Manual for flame adjustment and lighting instructions.

⚠ **NOTE TO INSTALLER:** Leave this installation manual with the homeowner. It should be kept for local inspections, future reference, and troubleshooting. Refer to the User Manual for full operation, maintenance, and safety information.