

# All Weather Siding
# Horizontal Installation Guide

v20210705US

NewTechWood®

# CONTENTS


| | |
|---|---|
| Important Note | 3 - 5 |
| Siding Parts | 6 - 8 |
| Under Construction | 9 |
| Furring Strips Installation | 10 |
| Expansion and Contraction Values Table | 11 |
| Locking the Siding Board | 12 - 13 |

**Siding - Horizontal Installation**

| | |
|---|---|
| -Framing | 14 - 15 |
| -Installation between the Outermost Edge & the Inside Corner | 16 - 22 |
| -Installation between the Inside Corner & the Butt Joint | 23 - 28 |
| -Installation between the Butt Joint & the Outside Corner | 29 - 35 |
| -Installation between the Outside Corners | 35 - 41 |
| -Installation between the Outside Corner & the Outermost Edge | 42 - 48 |
| -Finish the Top | 49 - 50 |


NOTE: Click on the heading to enter the section directly

**IMPORTANT Note:**

# Read All Sections Before You Start

For the most up to date information, please visit our website @ www.newtechwood.com

Prior to installing any composite siding system, it is recommended that you check with local building codes for any special requirements or restrictions. The diagrams and instructions outlined in this guide are for illustration purposes only and are not meant or implied to replace a licensed professional. Any construction or use of NewTechWood must be in accordance with all local zoning and/or building codes. The consumer assumes all risks and liability associated with the construction and use of this product.

## Safety

When dealing with any type of construction project, it is necessary to wear appropriate safety equipment to avoid any risk of injuries. NewTechWood recommends, but is not limited to the following safety equipment, when handling, cutting, and installing NewTechWood: gloves, a respiratory protection, long sleeves, pants, and safety glasses.

## Tools

Standard woodworking tools may be used. It is recommended that all blades have a carbide tip. Standard stainless steel or acceptable coated deck screws and nails are recommended.

## Environment

A clean, smooth, flat, and strong surface is needed to install NewTechWood's products correctly. Please check with local building codes before ever installing any type of siding. If installation does not occur immediately, NewTechWood's products need to be put on a flat surface at all times. It should NEVER be put on a surface that is NOT flat.

## Planning

Plan a layout for your siding before starting it to ensure the best possible looking siding for your project. Building codes and zoning ordinances generally apply to permanent structures, meaning anything that is anchored to the ground or attached to the house. So nearly every kind of siding requires permits and inspections from a local building department. We recommend drawing out a site plan of your proposed project that you intend to do to minimize errors and make your perfect Siding.

**Pressure wash on a scrap piece of material before using a pressure washer on the deck to make sure that your settings will not damage the Ultrashield coating.**

## Construction

NewTechWood UltraShield is NOT intended for use as columns, support posts, beams, joist stringers, support against a force, or other primary load-bearing members. NewTechWood must be supported by a code-compliant substructure. While NewTechWood products are great for retrofits, NewTechWood's products CANNOT be installed on existing siding boards.

## Static

Static can also be more prevalent in areas that are of higher altitude because the humidity is lower. For these areas, be careful of using conducive objects such as metal railing and chairs as static shocks might occur more often. A potential way to lower the amount of static shocks occurring is to apply Staticide (www.aclstaticide.com) on your deck or use anti-static mats before doorways.

## Ventilation

NewTechWood products CANNOT be directly installed onto a flat surface. It must be installed onto a substructure, so there is adequate and unobstructed air flow under the cladding to prevent excessive water absorption. A minimum of 1" (25mm) of continuous net free area under the siding surface is required for adequate ventilation on all siding, so air can circulate between adjacent members to promote drainage and drying.

## Heat and Fire

Excessive heat on the surface of NewTechWood products from external sources such as but not limited to fire or reflection of sunlight from energy efficient window products. Low-emissivity (Low-E) glass can potentially harm NewTechWood products. Low-E glass is designed to prevent passive heat gain within a structure and can cause unusual heat build-up on exterior surfaces. This extreme elevation of surface temperatures, which exceeds that of normal exposure, can possibly cause NewTechWood products to melt, sag, warp, discolor, increase expansion/contraction, and accelerate weathering.

Current or potential NewTechWood customers that have concerns about possible damage by Low-E glass should contact the manufacturer of the product, which contains Low-E glass for a solution to reduce or eliminate the effects of reflected sunlight.

## Fasteners

When fastening NewTechWood's products all screws that are face fastened should always be driven in at a 90 degree angle to the siding surface. Toe nailing/screwing should never be done to the products. An extra joist should be added if a 90 degree angle cannot be driven into the board. All fasteners should be on their own independent joists, when two boards ends meet each other there must be a sister joist. The end of each board must sit on its own joist.

Use white chalk, straight boards, or string lines as templates for straight lines. NEVER USE COLORED CHALK. Colored chalk will permanently stain NewTechWood's products and are highly not recommended.

All nails/screws that are face fixed should always be stainless steel. Depending on the screws that you use when face fixing, there could be potential bulging or mushrooming. It is recommended to take care of these mushrooms/bulges by taking a rubber mallet and patting them down to give your siding a better look.

When choosing which screws/nails to use always check first with your local home centers and hardware stores to see if they have screws that are engineered specifically for composite wood. These screws/nails will always work and give NewTechWood's products the best looking outcome, using other screws/nails that are not recommended for composite could potentially damage/harm the cladding. If you are unsure which screw/nail to use, contact your manufacturer for more information.

## Predrill

It is recommended to use the #8 screw for face fixing the boards and the trims onto the joist.
When face fixing, it is recommended to predrill a slightly bigger hole on the board and the trim to allow for expansion and contraction, as shown in the below diagram,

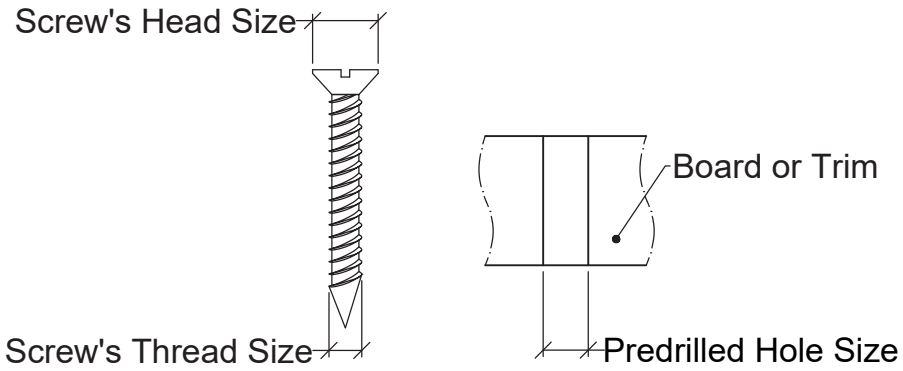


The predrilled hole size should be larger than the screw's thread size, from 1/16” (1.5 mm) to 5/64” (2 mm). Moreover, the predrilled hole size should also be smaller than the screw's head size, at least 5/64” (2 mm). A washer can be applied if the screw's head size is larger than the predrilled hole size, if it's below 5/64" (2 mm).

# Siding Parts

| Product | Purpose | Part |
|---|---|---|
| AW-02 | Used for the installation of the first board | 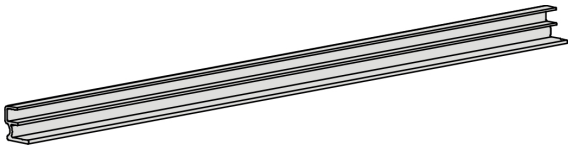 |
| AW-08 | Used at every joist to fix each board to the joist | 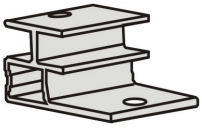 |
| T-7 | Used on the last Siding board |  |
| US09 | Siding Board (can be used in place of US30, US31) | 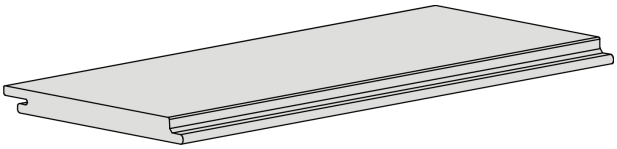 |
| US44 | F-Trim, used on the outermost edges | 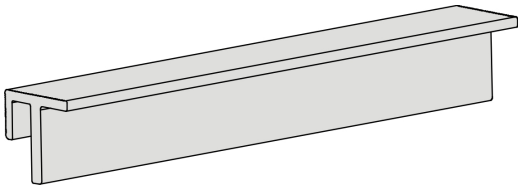 |
| US45 | I-Trim, used if there is a break between two boards to cover up the gap | 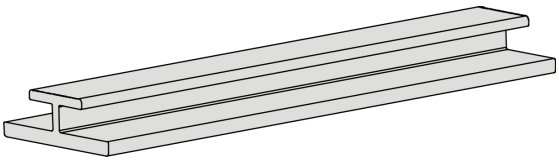 |
| US46 | Outside Corner Trim, used on the outside corners | 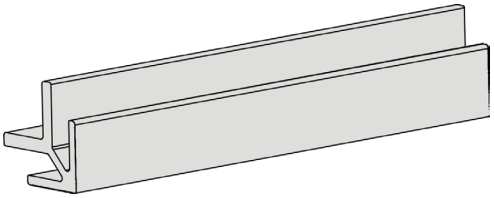 |
| US47 | Inside Corner Trim, used on the inside corners | 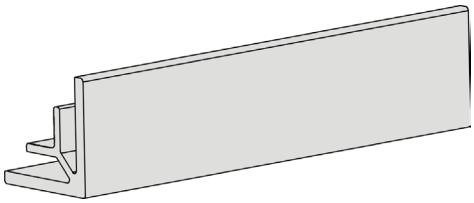 |

# Siding Screws
# (For Wood Joist)

**The table below shows the screws recommended to use for the installation, but not included.**

| Product | Purpose | Part |
|---|---|---|
| **#6 x 1 1/4" Stainless Steel SS304** | Used when locking the board into the Clip (AW08) | 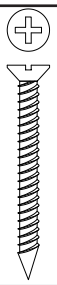 |
| **#8 x 3" Stainless Steel SS304 **depends on the thickness of your joists** | Used when installing the joist onto the wall | 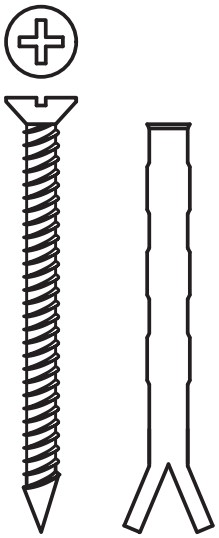 |
| **#8 x 1" Stainless Steel SS304 (Pan Head)** | Used when installing the Clip (AW08) and the Rubber Stopper (T-7) onto the wood joists | 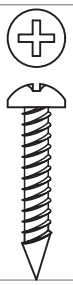 |
| **#8 x 1 1/4" Stainless Steel SS304 (Flat Head)** | Used when installing the boards and the trims onto the wood joists |  |

# Siding Screws
# (For Aluminum Joist)

**The table below shows the screws recommended to use for the installation, but not included.**

| Product | Purpose | Part |
|---|---|---|
| **#6 x 1 1/4" Stainless Steel SS304** | Used when locking the board into the Clip (AW08) | 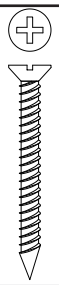 |
| **#8 x 3" Stainless Steel SS304 **depends on the thickness of your joists** | Used when installing the joist onto the wall | 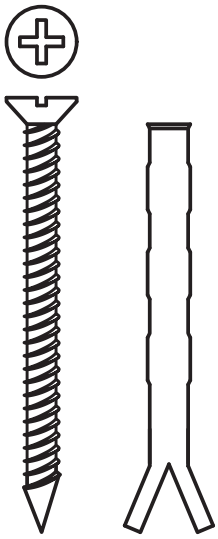 |
| **#8 x 1" Stainless Steel SS410 (Pan Head)** | Used when installing the Clip (AW08) and the Rubber Stopper (T-7) onto the aluminum joists |  |
| **#8 x 1 1/4" Stainless Steel SS410 (Flat Head)** | Use when installing the boards and the trims onto the aluminum joists |  |

*Note: All screws are based on our recommendation and if the installation requires something different than what is shown, a professional should be consulted before installing.

The following installation guide will use the above screw sizes.

# Under Construction

We recommend for the under construction aluminum or pressure treated wood joists. Each cladding board needs to be supported by a joist NO MORE than 16" (406mm) from center to center. Extra care is required in order to provide sufficient joisting in and around obstacles such as windows, fascia's, soffits, guttering, ventilation points etc. Below is an example of the layers that would occur in a typical installation, but a licensed professional should always be consulted prior to any installation.

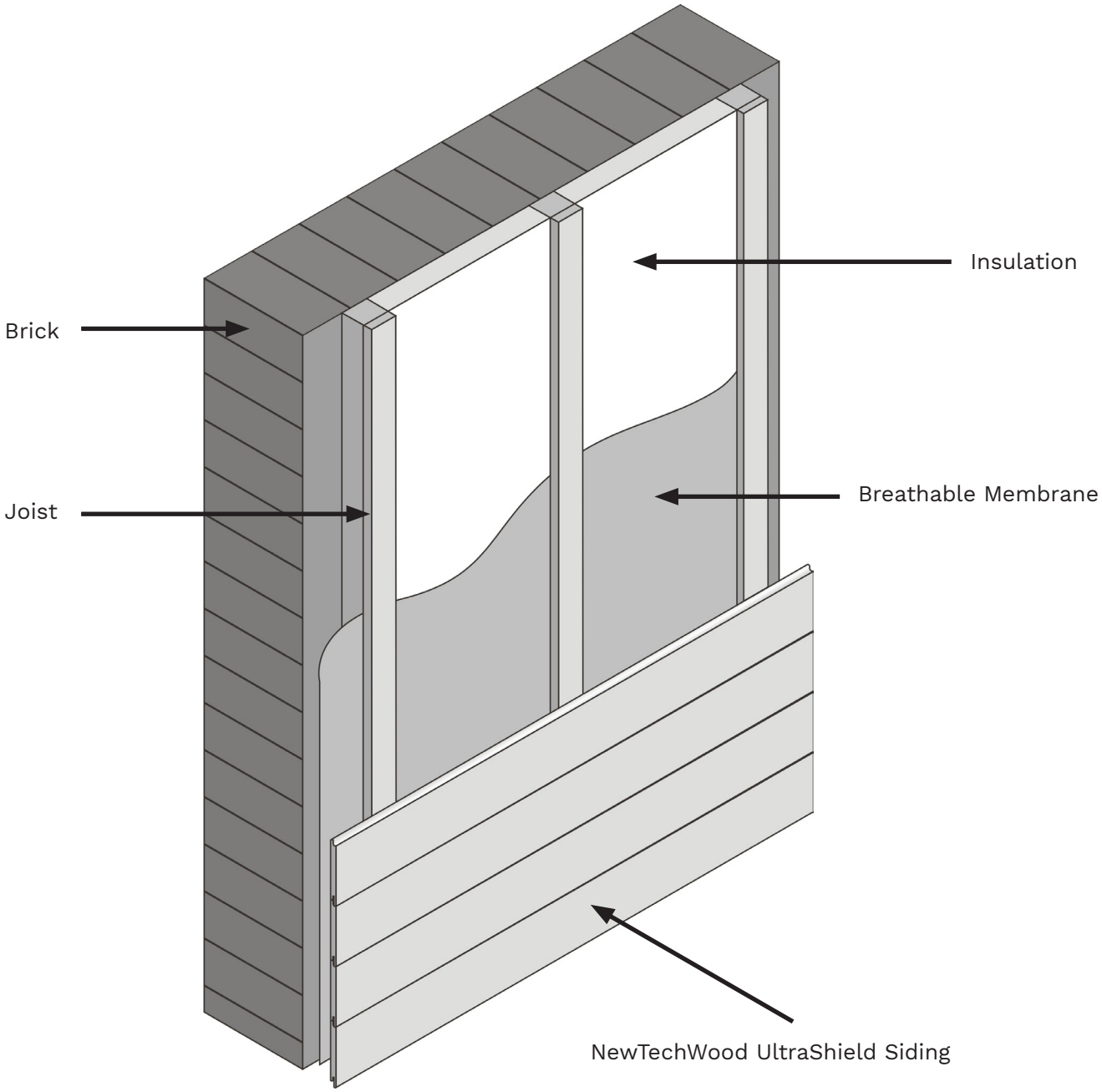

# Furring Strips Installation

A building professional should be consulted regarding vapor barriers and insulation for your project. Where a vapor barrier is to be used, it should be a breathable type and must be positioned behind the joists. The joist needs to have a minimum thickness of 1" (25mm).

Wood joists should be fixed into position at a maximum of 16" (406mm) centers using a suitable A4 Stainless Steel Countersunk Wood/Masonry screw. All joists needs to be flat and leveled against the wall surface use shims if necessary.

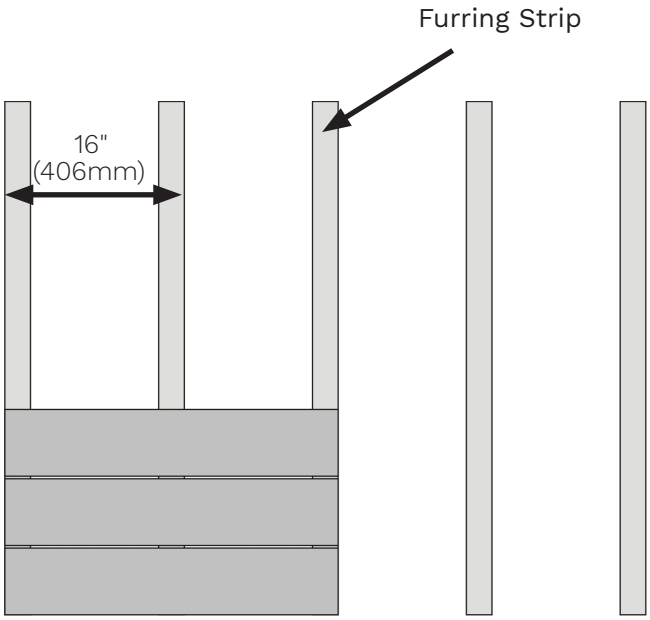


**Horizontal Installation**

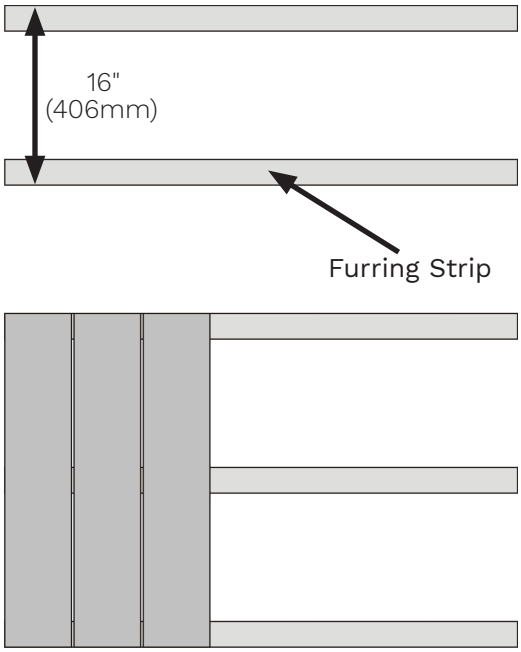


**Vertical Installation**

# Expansion and Contraction Values

NewTechWood siding boards will experience expansion and contraction with changes in temperature. Expansion and contraction are most significant where extreme temperature changes occur. Fastening the deck planks according to the gapping requirements noted in the following table accommodates for this movement.

## Expansion and Contraction table of values for North America, Canada, Australia and Asia

Length (Feet)

| Installation Temperature (Farhenheit) | 3 | 8 | 9 | 10 | 12 | 13 | 16 | 18 | Gap (in) |
|---|---|---|---|---|---|---|---|---|---|
| **32** | 1/16 | 2/16 | 2/16 | 3/16 | 3/16 | 4/16 | 4/16 | 5/16 | |
| **41** | 1/16 | 2/16 | 2/16 | 2/16 | 3/16 | 3/16 | 4/16 | 4/16 | |
| **50** | 1/16 | 2/16 | 2/16 | 2/16 | 2/16 | 3/16 | 3/16 | 3/16 | |
| **59** | 1/16 | 1/16 | 1/16 | 2/16 | 2/16 | 2/16 | 2/16 | 3/16 | |
| **68** | 3/64 | 1/16 | 1/16 | 1/16 | 1/16 | 2/16 | 2/16 | 2/16 | |
| **77** | 3/64 | 1/16 | 1/16 | 1/16 | 1/16 | 1/16 | 1/16 | 1/16 | |
| **86** | 3/64 | 3/64 | 3/64 | 3/64 | 3/64 | 1/16 | 1/16 | 1/16 | |

**Note: If you are still unsure of what gapping to use, contact the manufacturer and they will give you the correct gapping requirements based on your environment and area.**

# Locking the Siding Board

Since the composite wood must allow for expansion and contraction due to temperature change, the board must be locked at one fixed point but only one point to allow the remaining board to expand and contract freely. In the case there is a need to lock the board, Clip (AW08) comes with a separate hole.

**It is important that DO NOT LOCK any other clips for the same board.**

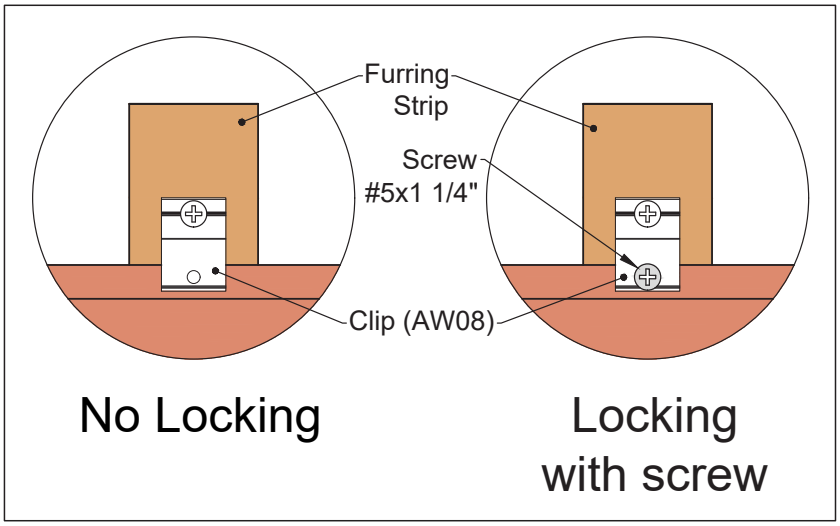


**- Horizontal Installation -**

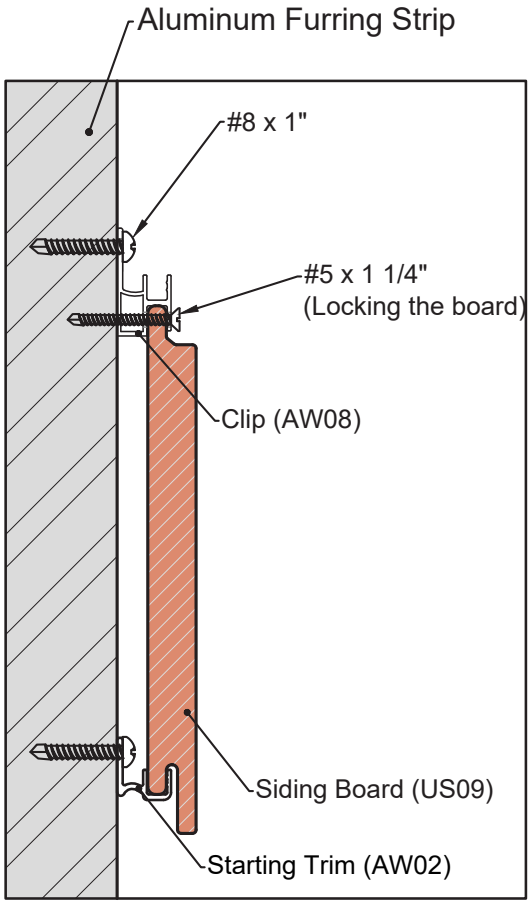


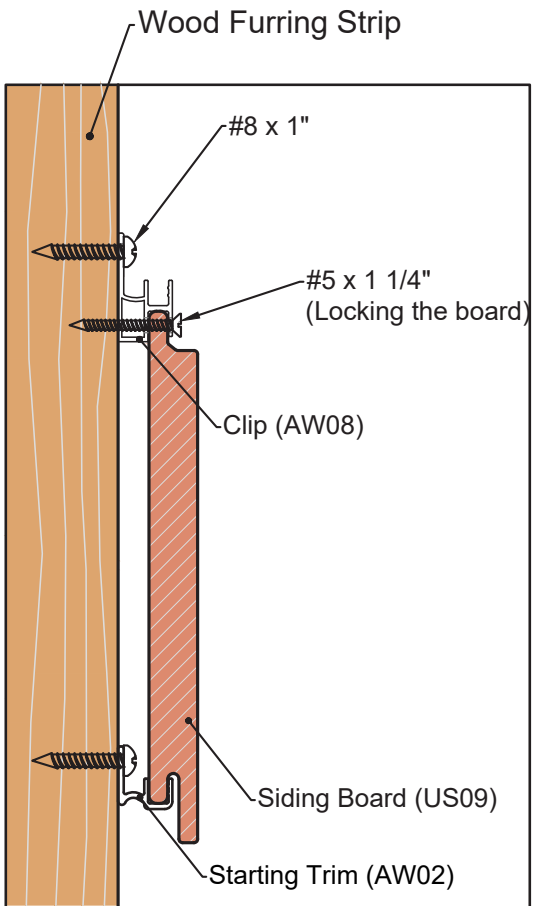

When installing horizontally, it is required to lock the Clip (AW08) at the middle of the board, as shown in ***Diagram 1***.

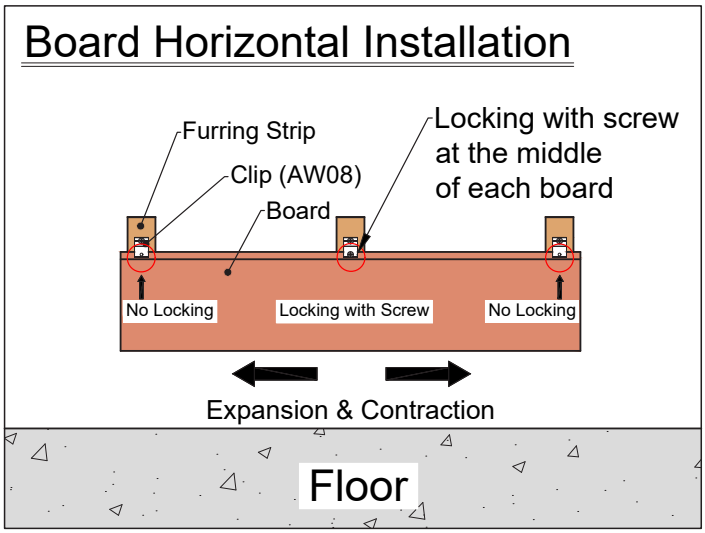


**Diagram 1**

When installing more than one board horizontally, it is recommended to utilize the I-Trim (US45) at each butt joint. It is also required to lock the Clip (AW08) at the middle of each board, as shown in ***Diagram 2***.

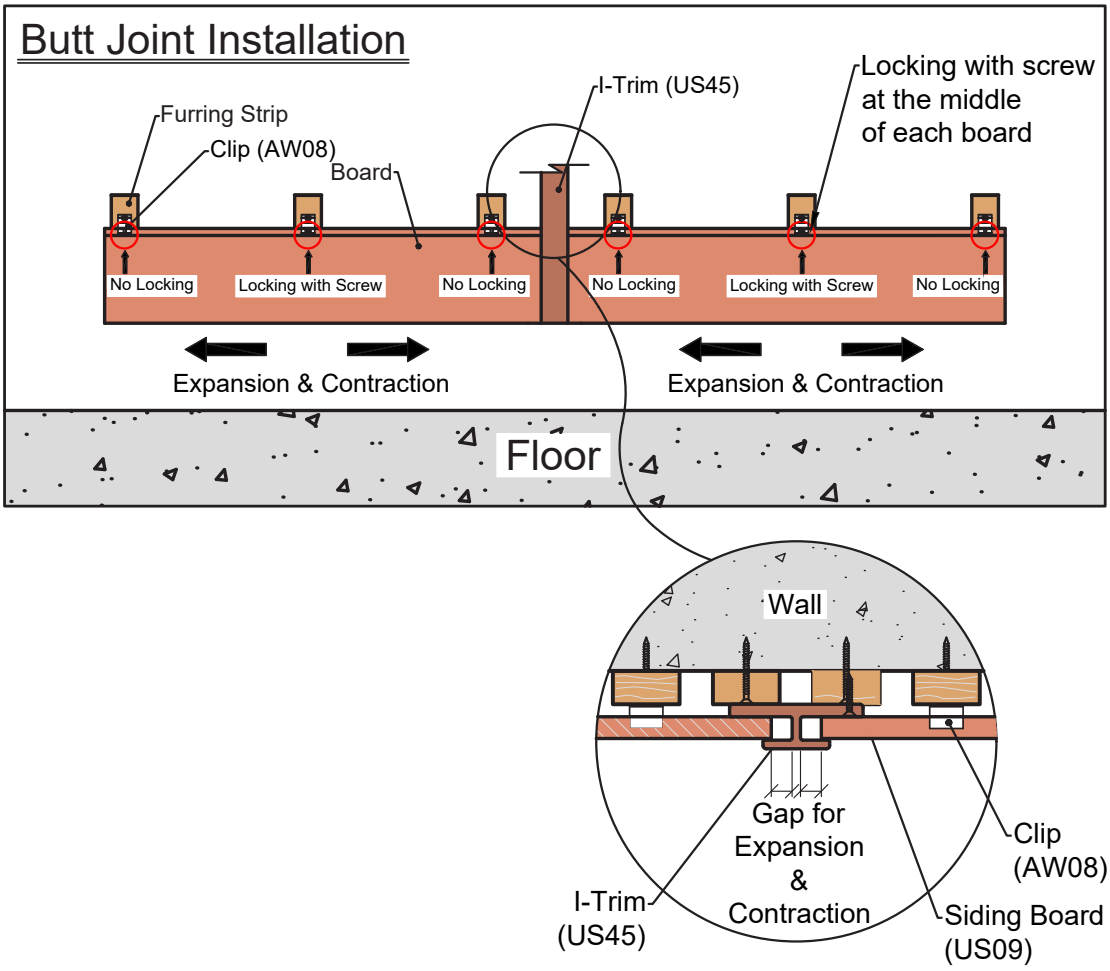


**Diagram 2**

# Siding Horizontal Installation

## Framing

The frame needs to be level before installing the Siding boards.

**Note:**
**An adequate span between the joists is required to keep the Siding boards from bending. Please review *page 10* of this installation guide to see what span is needed.**

The below diagram shows the wall replicating different scenarios potentially occuring when installing the Siding boards.

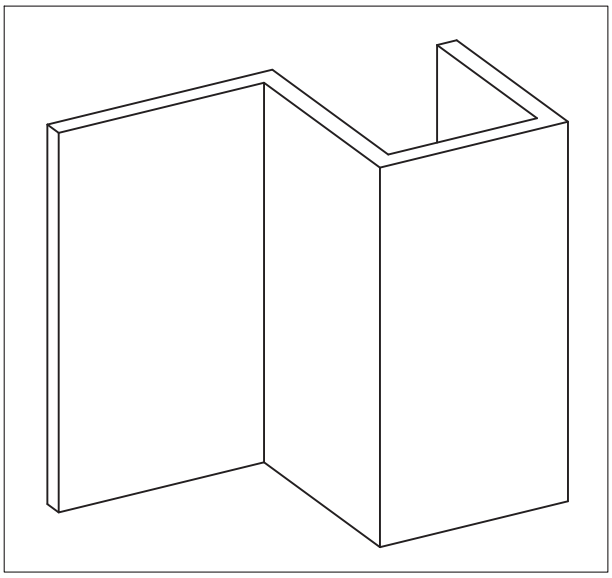

**Note:**
**We are using wood joists for this installation. If you are using aluminum joists, please refer to *page 8* of this installation guide for the correct recommended screws.**

1 Measure and chalk the joists according to the span data specified on page 8 of this installation guide, as shown in ***Diagram 5***.

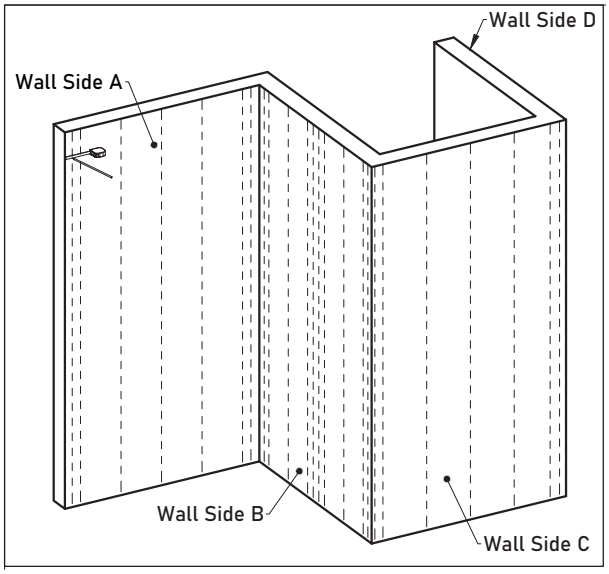


**Diagram 5**

2 Fix the joists onto the wall that you intend to install with screws, as shown in ***Diagram 6***. The distance between the screws should be at least 19 5/8” (500mm) and max to 39 3/8” (1000mm). ***Detail 6-1*** to ***Detail 6-4*** show the recommended joist distance to install the various trims securely.

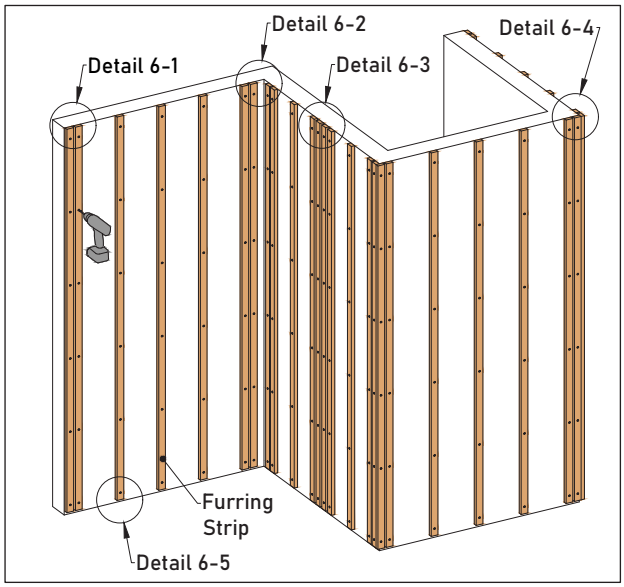


**Diagram 6**

**2.1** For the Outermost Edge, please install according to ***Detail 6-1***.

**2.2** For the Inside Corner, please install according to ***Detail 6-2***.

**2.3** For the Butt Joint of two-column boards with I-Trim (US45), please install according to ***Detail 6-3***.

**2.4** For the Outside Corner, please install according to ***Detail 6-4***.

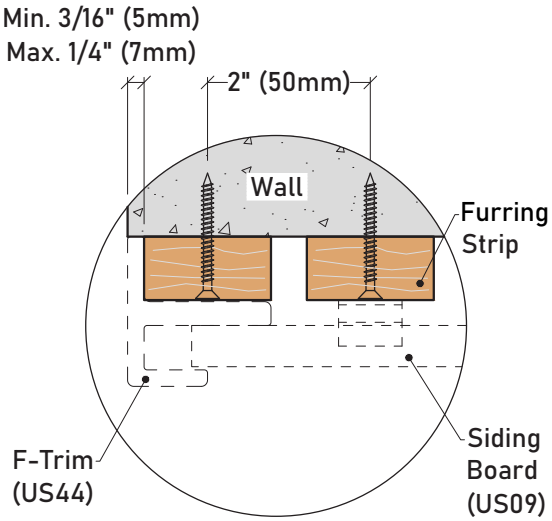


**Detail 6-1**

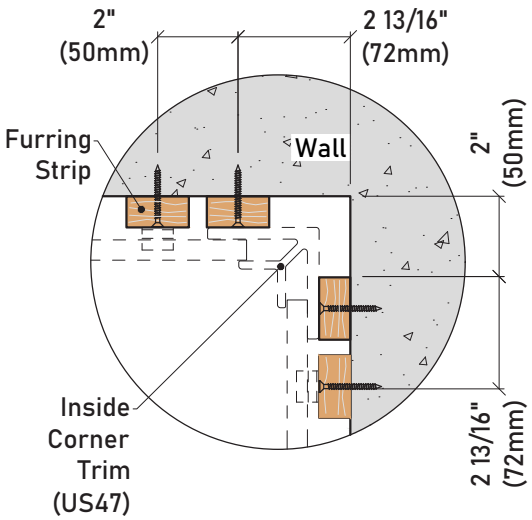


**Detail 6-2**

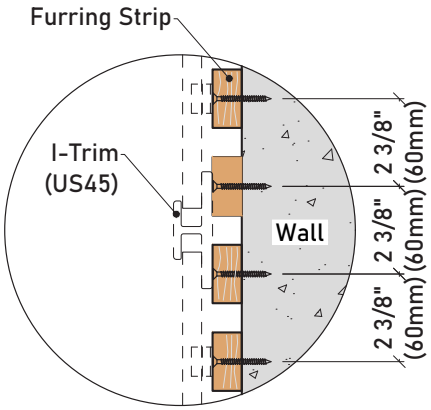


**Detail 6-3**

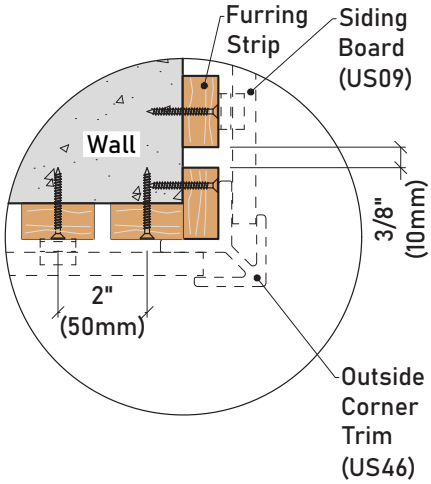


**Detail 6-4**

**Note:**
**1. It is recommended to leave a gap from min 3/16" (5mm) and Max. to 1/4" (7mm) between the wall's outermost edge and the joist, as shown in** *Detial 6-1*.

**2. A mimimum gap of 3/4" (20mm) needs to be left between the bottom of the joist and the floor, as shown in** *Detail 6-5*.

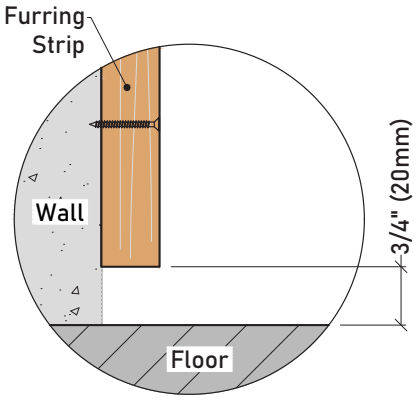


**Detail 6-5**

## 3 Wall Side A (Between the Outermost Edge and the Inside Corner)

Fasten the Inside Corner Trim (US47) onto the joists with screws. The screws in-between distance should be at least 19 5/8" (500mm), and Max. to 39 3/8" (1000mm). It is recommended to begin the installation from the inside corner, as shown in ***Diagram 7*** and ***Detail 7-1***.

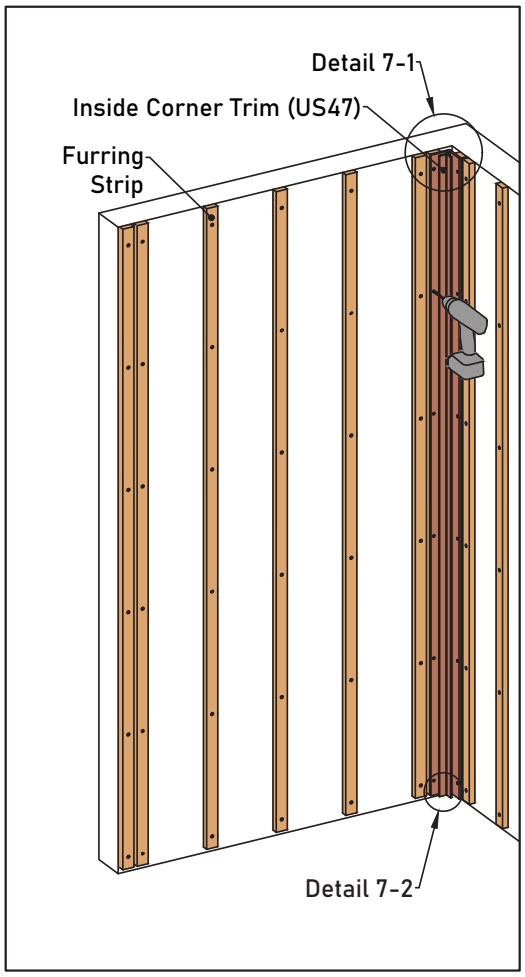


**Diagram 7**

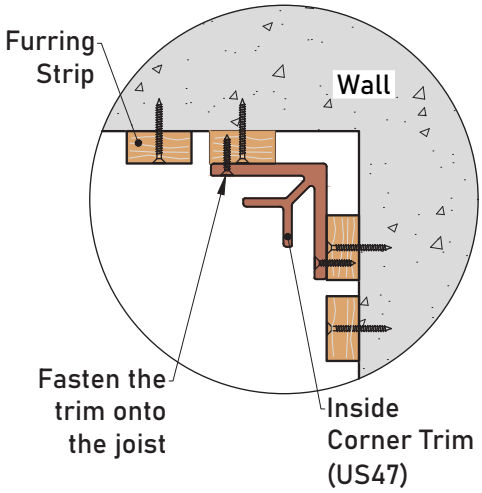


**Detail 7-1**

**Note:**
**1. Pre-drill the screw holes for the Inside Corner Trim (US47) before installation.**

**2. A minimum gap of 3/4" (20mm) needs to be left between the Inside Corner Trim (US47) and the floor, as shown in** *Detail 7-2*.

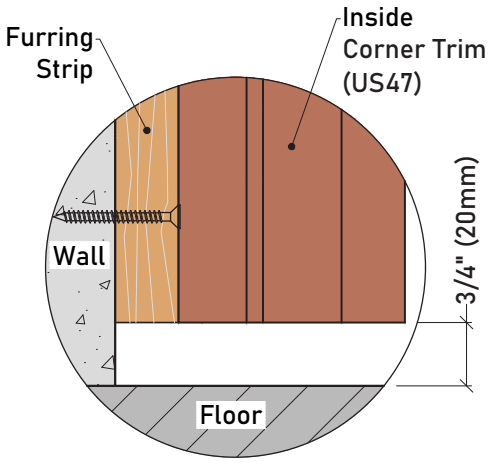


**Detail 7-2**

4 Install the Starting Trim (AW02) at the joist's bottom with screws, as shown in ***Diagram 8***.

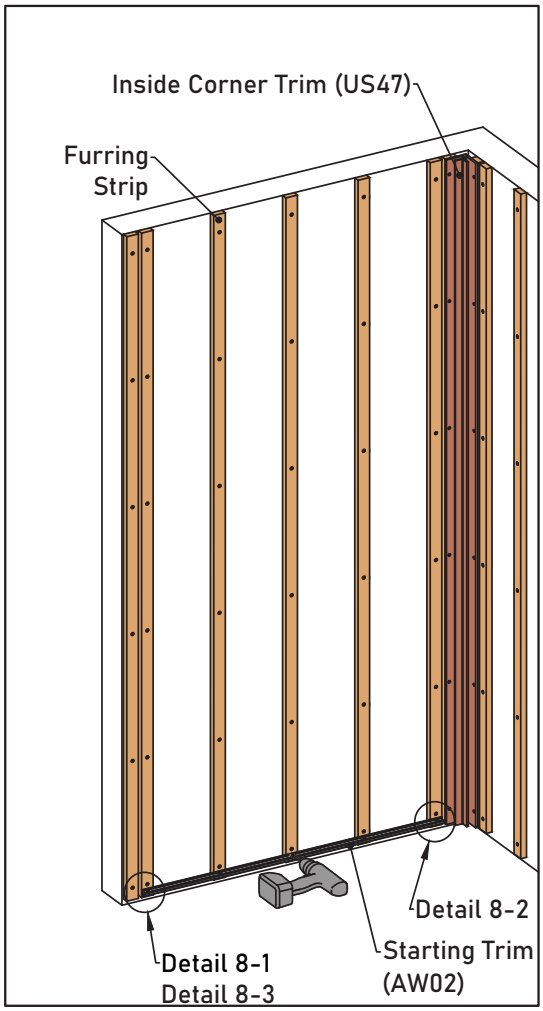


**Diagram 8**

**Note:**

**1. Pre-drill the screw holes for the Starting Trim (AW02) before installation.**

**2. A minimum gap of 3/4" (20mm) needs to be left between the Starting Trim (AW02) and the floor, as shown in** *Detail 8-1*.

**3. A minimum gap of 3/16" (5mm) needs to be left between the Starting Trim (AW02) and the F-Trim (US44), as shown in** *Detail 8-2* **and** *Detail 8-3*.

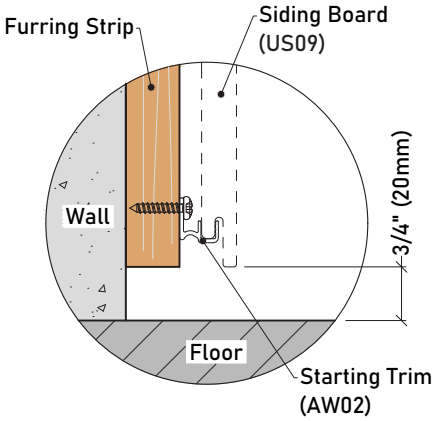


**Detail 8-1**

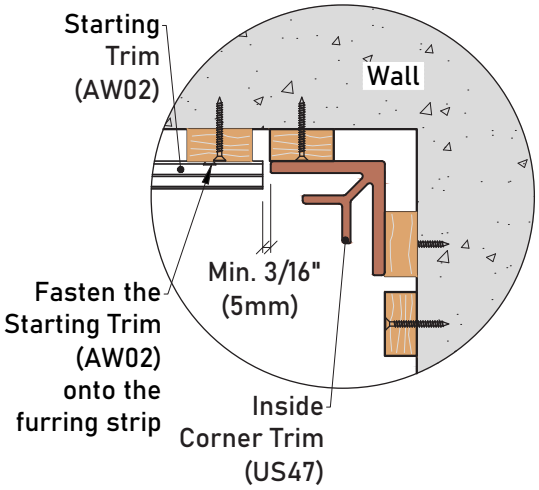


**Detail 8-2**

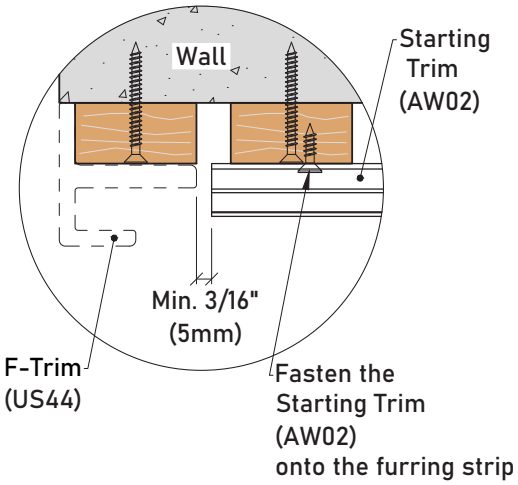


**Detail 8-3**

5 Put the Siding Board (US09) over the Starting Trim (AW02) and fasten it to the joist with Clip (AW08), as shown in ***Diagram 9***.

**Note:**

**1. Since the composite wood must allow for expansion and contraction due to temperature change, the board must be locked at one fixed point but only one point to allow the remaining board to move freely. When installing horizontally, it is required to lock the Clip (AW08) at the middle of each board, as shown in** *Detail 9-1*.

**DO NOT LOCK any other Clip (AW08) for the same board.**

**Please review** *page 12*, **"***Locking the Siding Board***" of this installation guide for further information.**

**2. The gap between the Siding Board (US09), F-Trim (US44), and the Inside Corner Trim (US47) is vital to avoid warping or buckling, as shown in** *Detail 9-2* **and** *Detail 9-3*. **Please select the appropriate gap value according to the** *Expansion and Contraction Values Table* **on** *page 11* **of this installation guide.**

**3. The distance between the Siding Board (US09) and the floor should be at least 3/4" (20mm), as shown in** *Detail 9-4*.

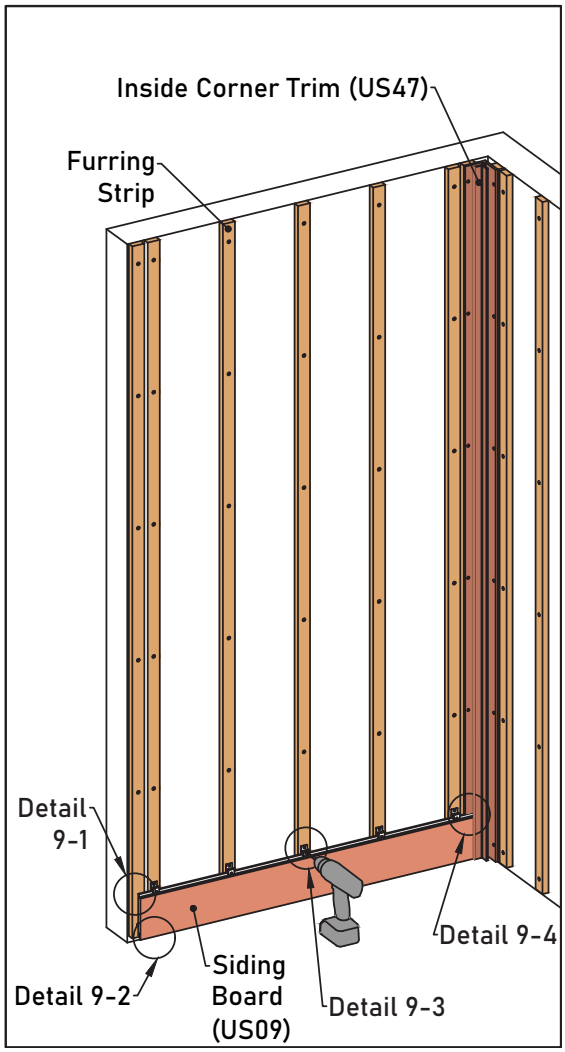


**Diagram 9**

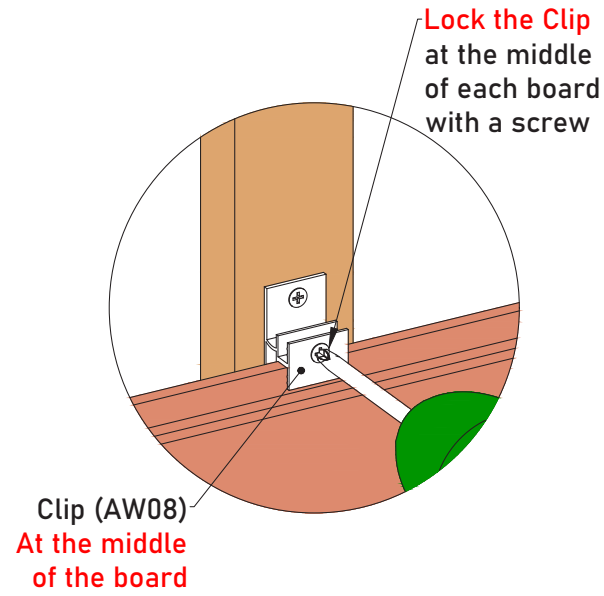


**Detail 9-1**

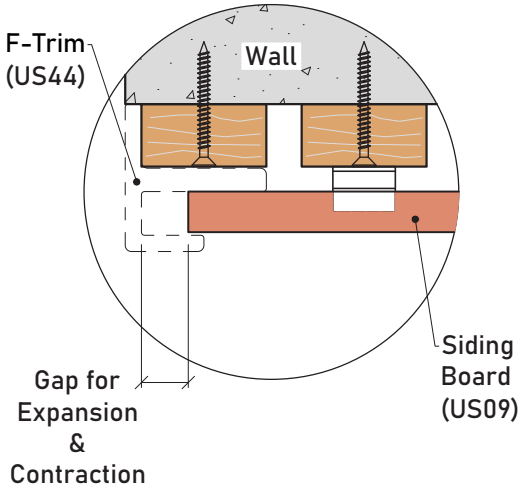


**Detail 9-2**

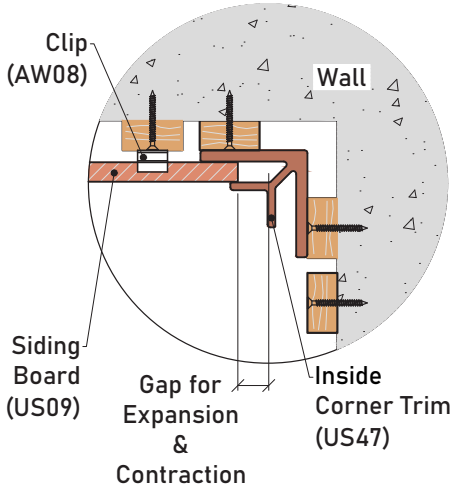


**Detail 9-3**

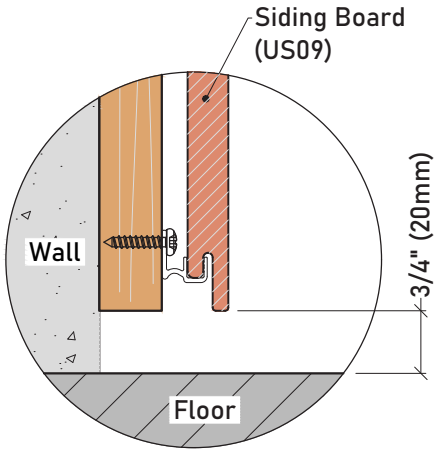


**Detail 9-4**

6 When you are at the Siding's last board, measure the distance between the top of the joist and the Clip (AW08), as shown in ***Diagram 10*** and ***Detail 10-1***.

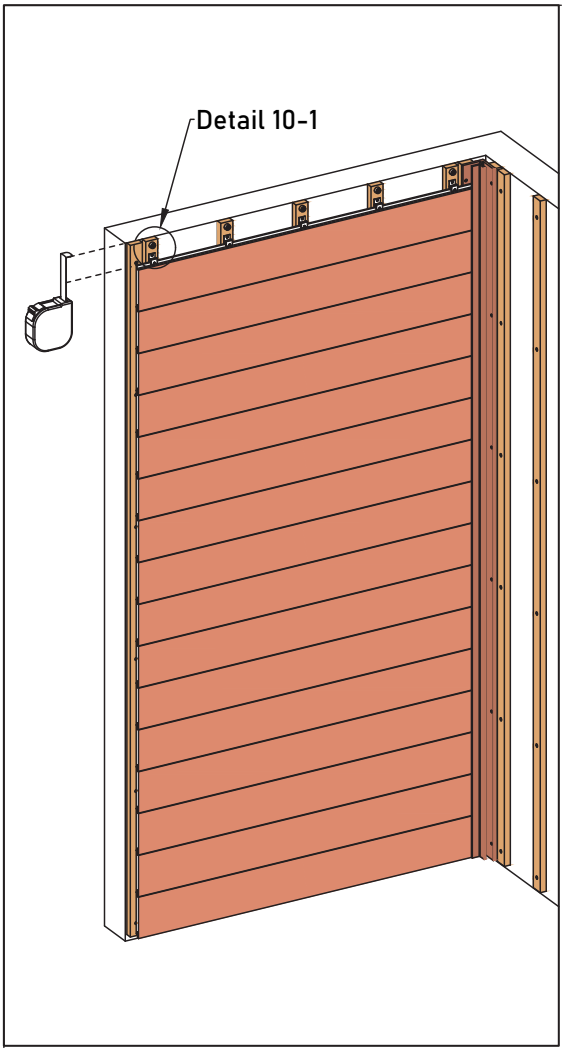


**Diagram 10**

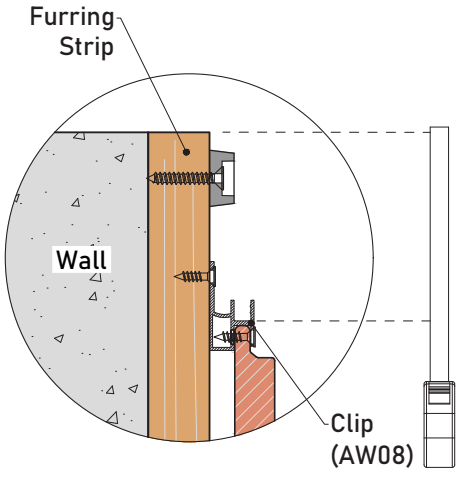


**Detail 10-1**

7 Cut the Siding Board (US09) according to the measured length, as shown in ***Diagram 11*** and ***Detail 11-1***.

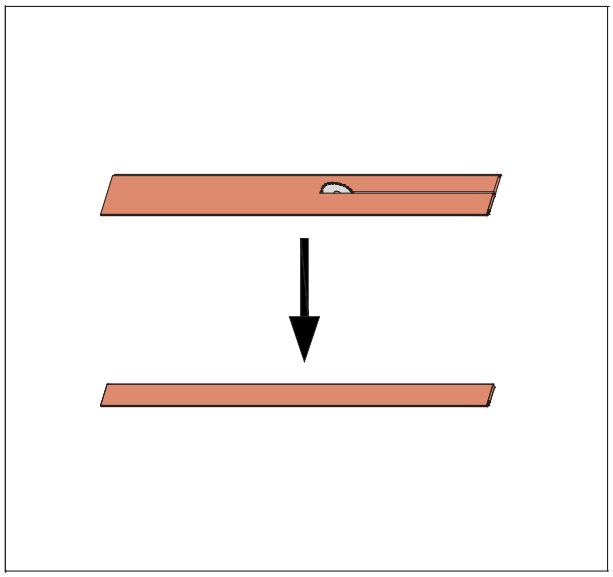

**Diagram 11**

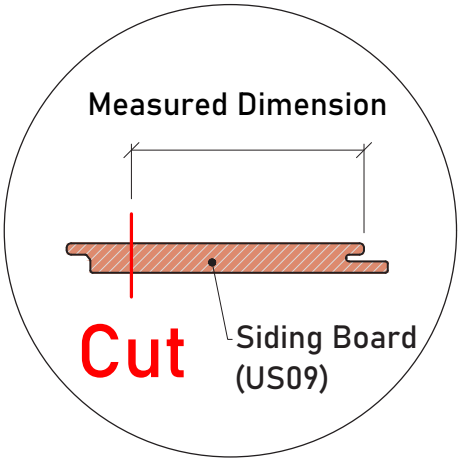


**Detail 11-1**

8 Then install the Rubber Stopper (T-7) on to each joist with screws, as shown in ***Diagram 12*** and ***Detail 12-1***.

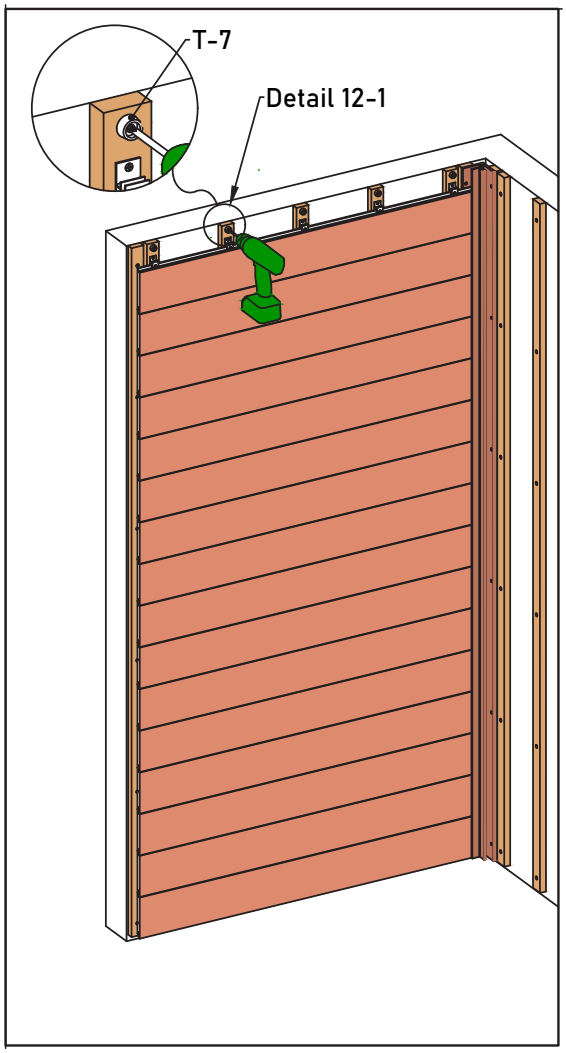


**Diagram 12**

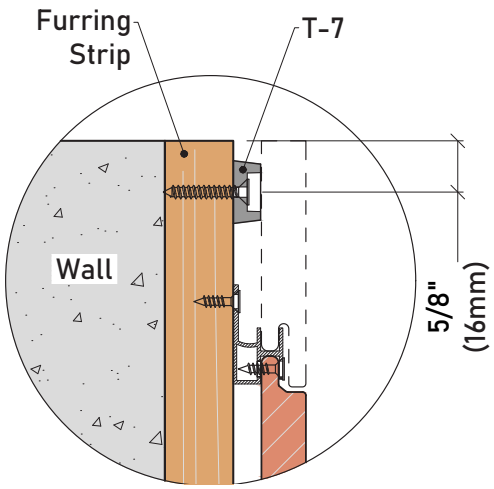


**Detail 12-1**

9 Put the cut Siding Board (US09) over the Clip (AW08) in position and then face fix it onto each joist along the length of the board over the Rubber Stopper (T-7), as shown in ***Diagram 13*** and ***Detail 13-1***.

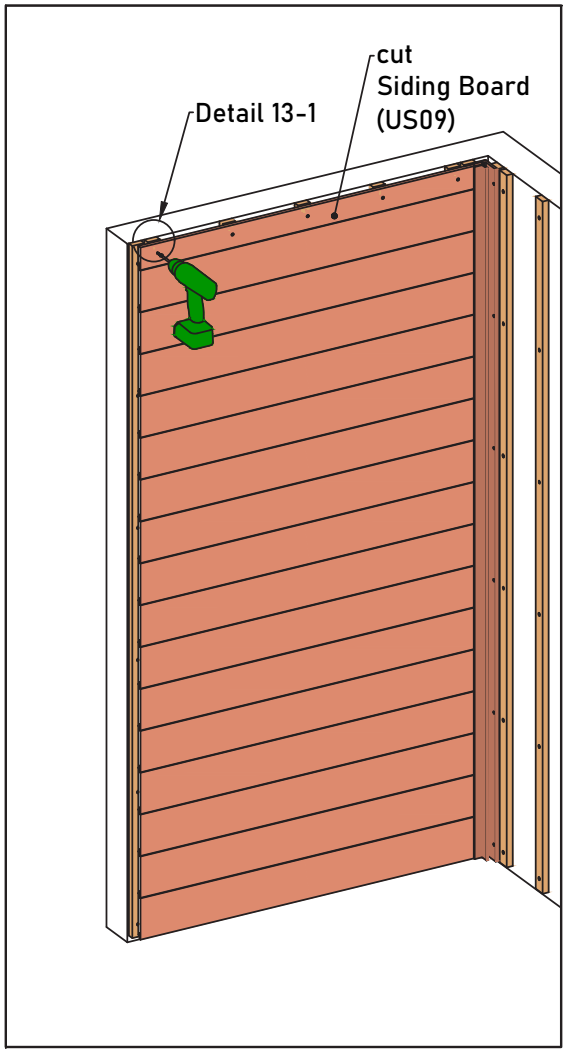


**Diagram 13**

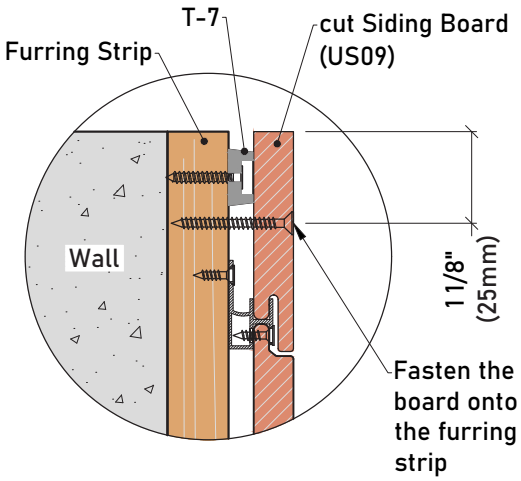


**Detail 13-1**

10 Insert the F-Trim (US44) in place, as shown in ***Diagram 14***.

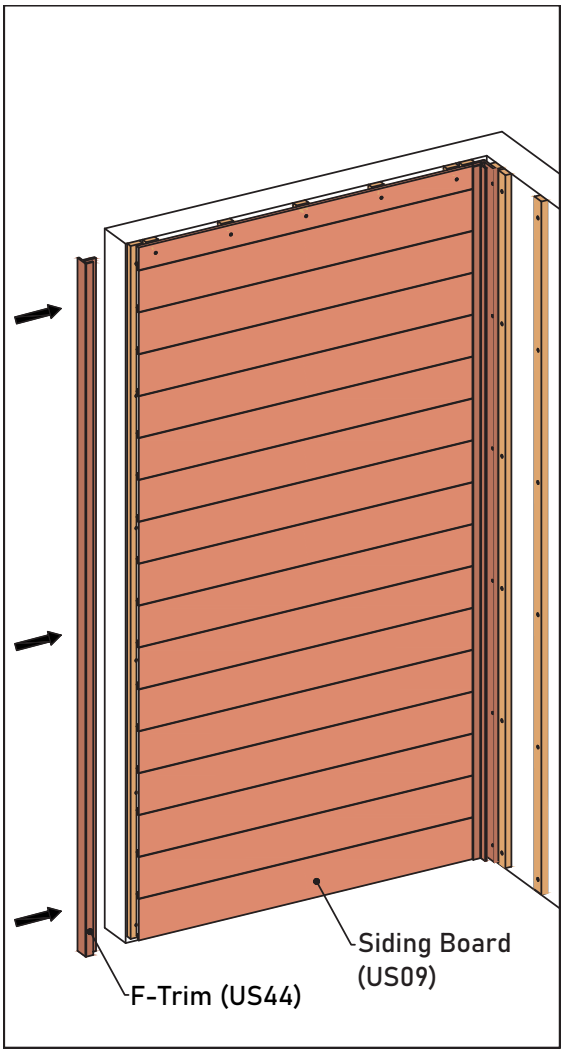


**Diagram 14**

**11** Secure the F-Trim (US44) onto the joist with screws, as shown in ***Diagram 15*** and ***Detail 15-1***. The screws in-between distance should be at least 19 5/8" (500mm), and Max. to 39 3/8" (1000mm).

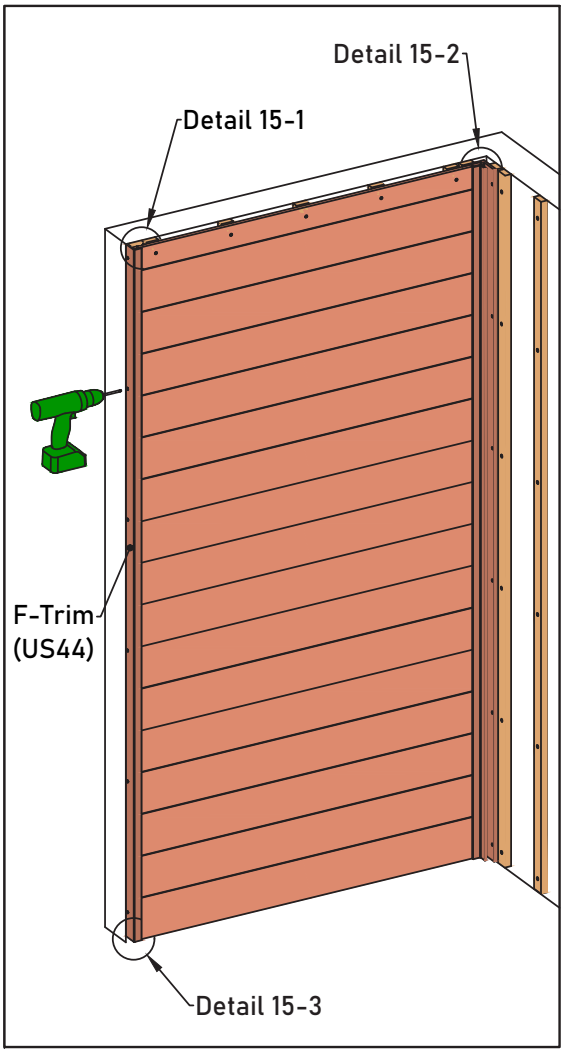


**Diagram 15**

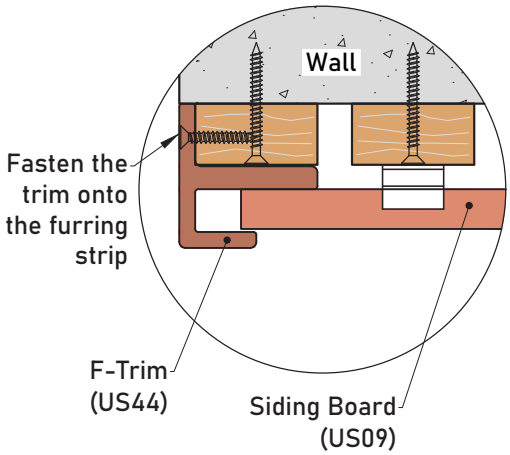


**Detail 15-1**

**Note:**
**1. Pre-drill the screw holes for the F-Trim (US44) before installation.**

**2. A minimum gap of 3/4" (20mm) needs to be left between the F-Trim (US44) and the floor, as shown in** *Detail 15-2*.

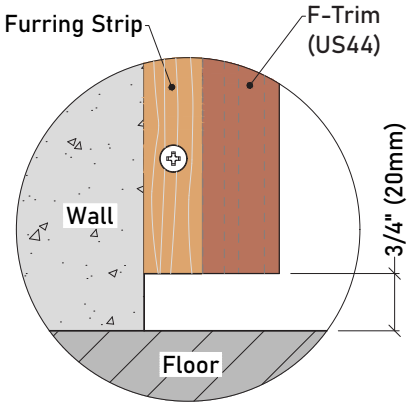


**Detail 15-2**

## 12 Wall Side B (Between the Inside Corner and the Butt Joint)

Install the Starting trim (AW02) at the joist's bottom with screws, as shown in ***Diagram 16***.

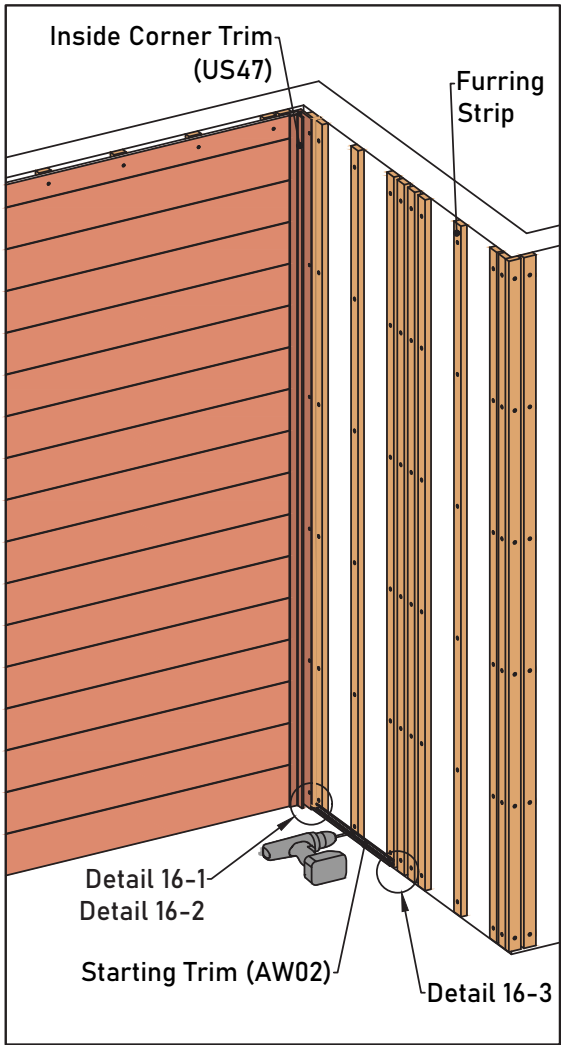


**Diagram 16**

**Note:**

**1. Pre-drill the screw holes for the Starting Trim (AW02) before installation.**

**2. A minimum gap of 3/4" (20mm) needs to be left between the Starting Trim (AW02) and the floor, as shown in** *Detail 16-1*.

**3. A minimum gap of 3/16" (5mm) needs to be left between the Starting Trim (AW02), the Inside Corner Trim (US47), and the I-Trim (US45), as shown in** *Detail 16-2* **and** *Detail 16-3*.

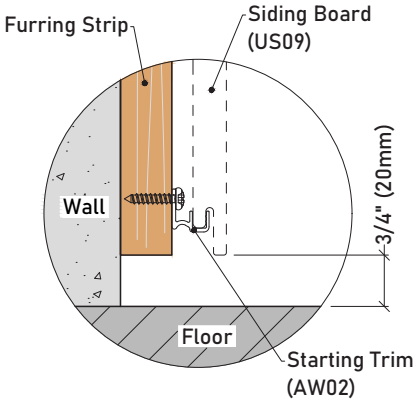


**Detail 16-1**

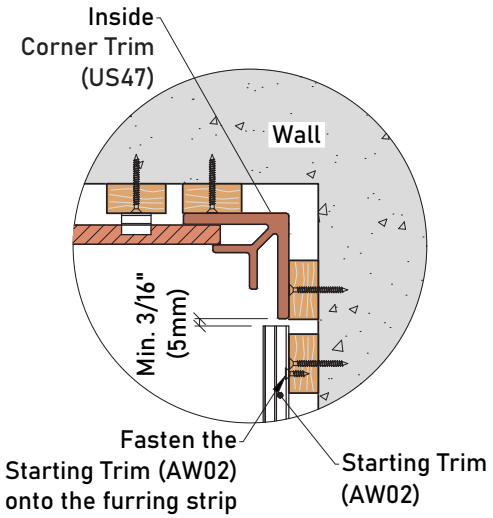


**Detail 16-2**

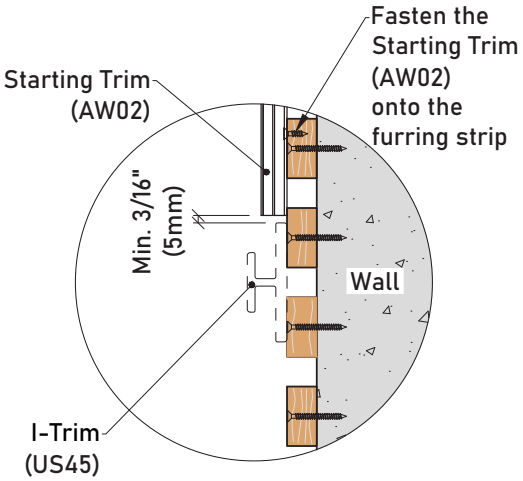


**Detail 16-3**

13 Put the Siding Board (US09) over the Starting Trim (AW08) and fasten it to the joist with Clip (AW08), as shown in ***Diagram 17***.

**Note:**

**1. Since the composite wood must allow for expansion and contraction due to temperature change, the board must be locked at one fixed point but only one point to allow the remaining board to move freely. When installing horizontally, it is required to lock the Clip (AW08) at the middle of each board, as shown in** *Detail 17-1*.

**DO NOT LOCK any other Clip (AW08) for the same board.**

**Please review** *page 12*, **"***Locking the Siding Board***" of this installation guide for further information.**

**2. The gap between the Siding Board (US09), I-Trim (US45), and the Inside Corner Trim (US47) is vital to avoid warping or buckling, as shown in** *Detail 17-2* **and** *Detail 17-3*. **Please select the appropriate gap value according to the** *Expansion and Contraction Values Table* **on** *page 11* **of this installation guide.**

**3. The distance between the Siding Board (US09) and the floor should be at least 3/4" (20mm), as shown in** *Detail 17-4*.

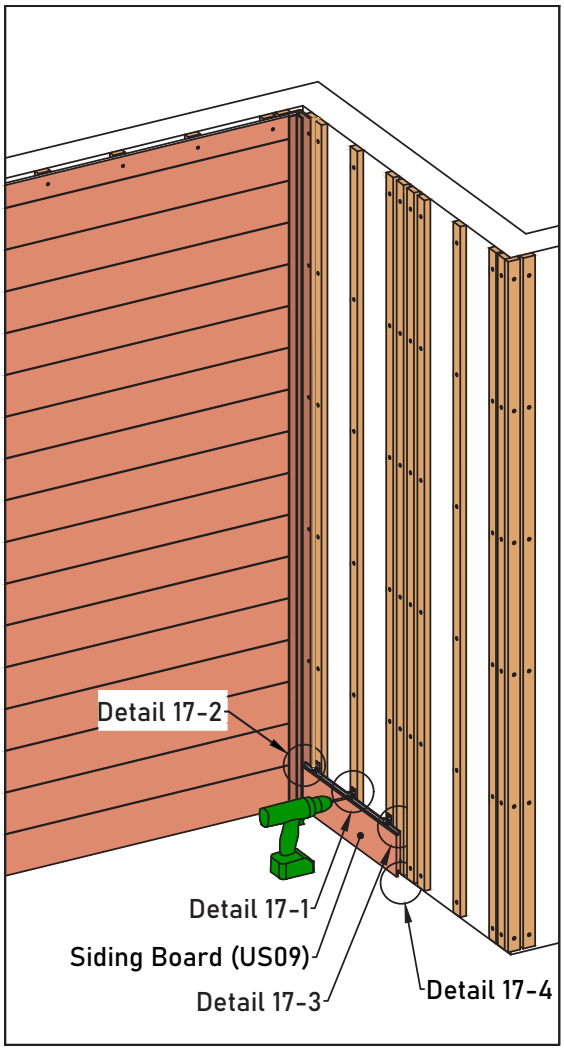


**Diagram 17**

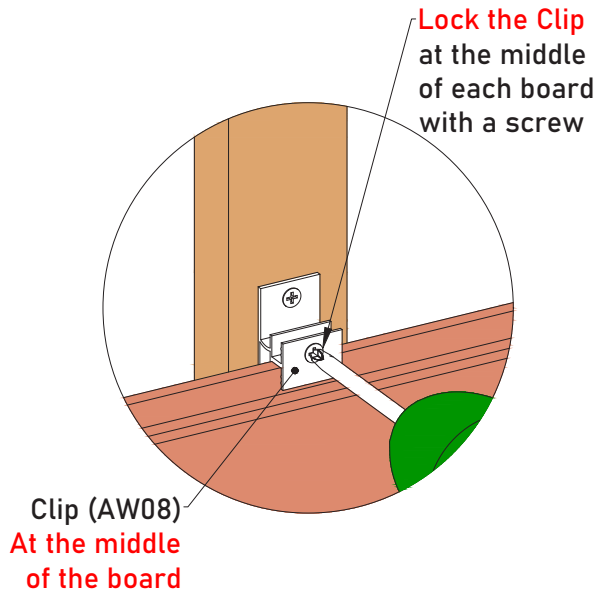


**Detail 17-1**

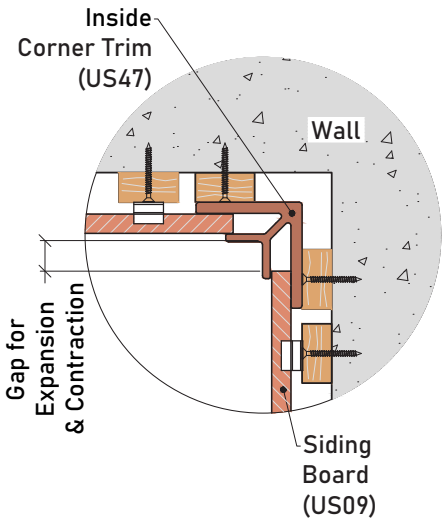


**Detail 17-2**

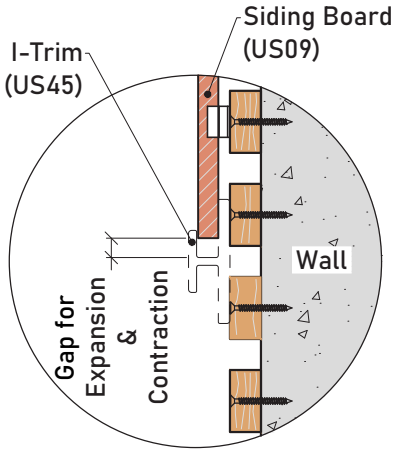


**Detail 17-3**

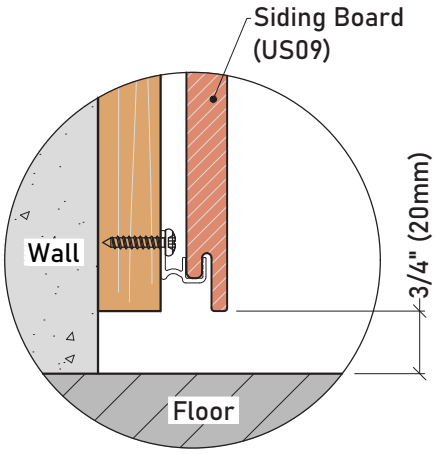


**Detail 17-4**

14 When you are at the Siding's last board, measure the distance between the top of the joist and the Clip (AW08), as shown in ***Diagram 18*** and ***Detail 18-1***.

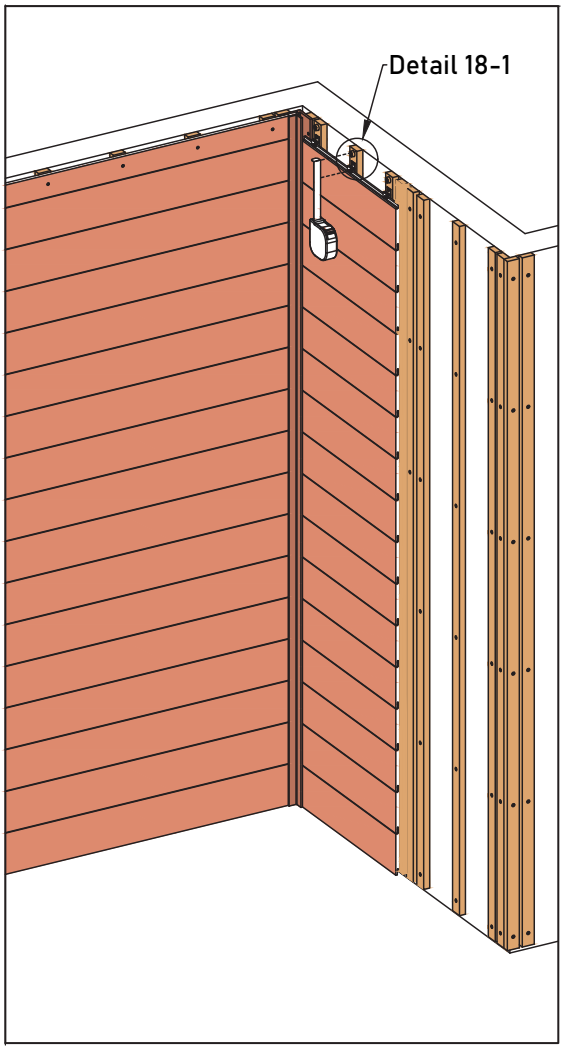


**Diagram 18**

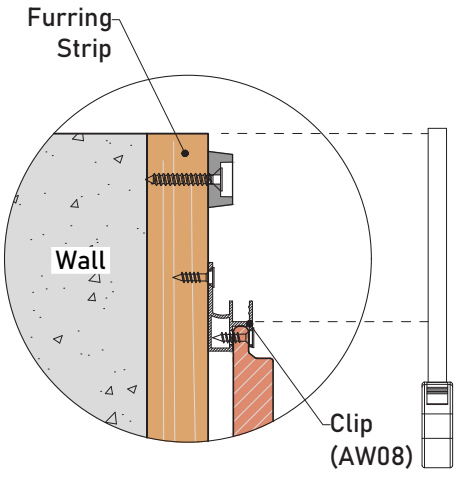


**Detail 18-1**

15 Cut the Siding Board (US09) according to the measured dimension, as shown in ***Diagram 19*** and ***Detail 19-1***.

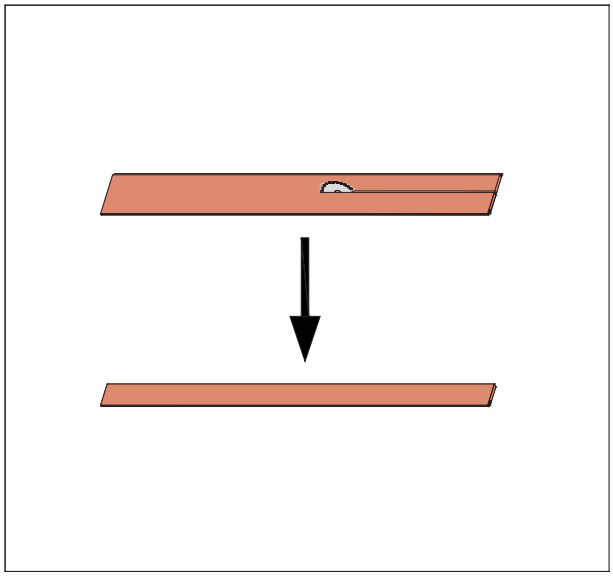

**Diagram 19**

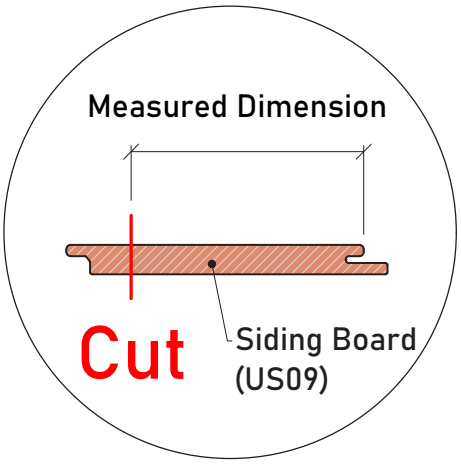


**Detail 19-1**

16 Then install the Rubber Stopper (T-7) onto each joist with screws, as shown in ***Diagram 20*** and ***Detail 20-1***.

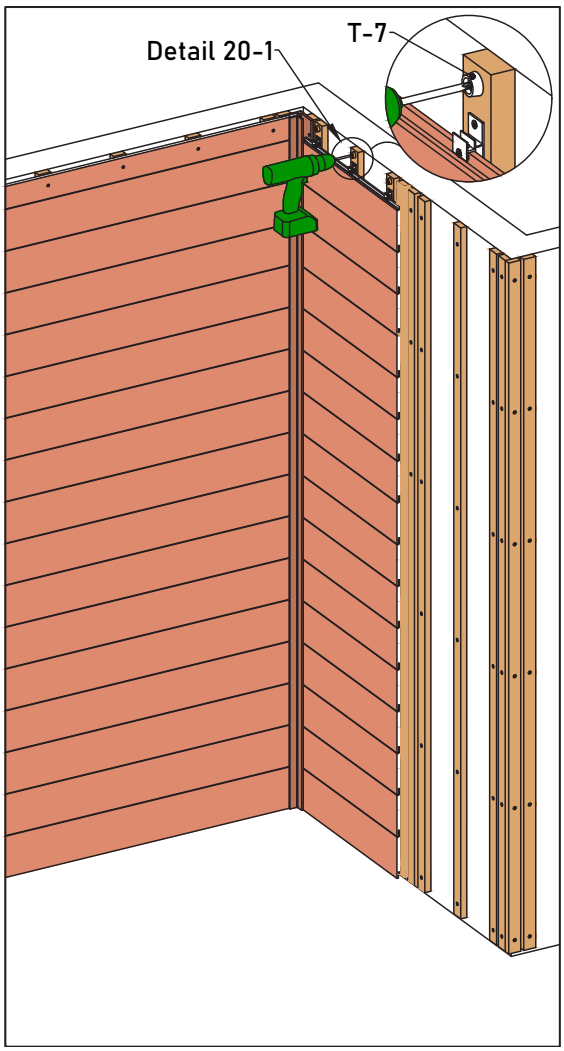


**Diagram 20**

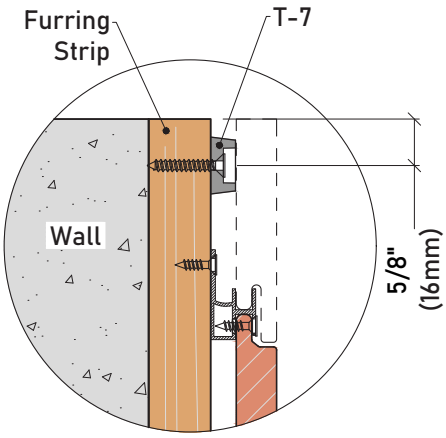


**Detail 20-1**

17 Put the cut Siding Board (US09) over the Clip (AW08) in position and then face fix it onto each joist along the length of the board over the Rubber Stopper (T-7), as shown in ***Diagram 21*** and ***Detail 21-1***.

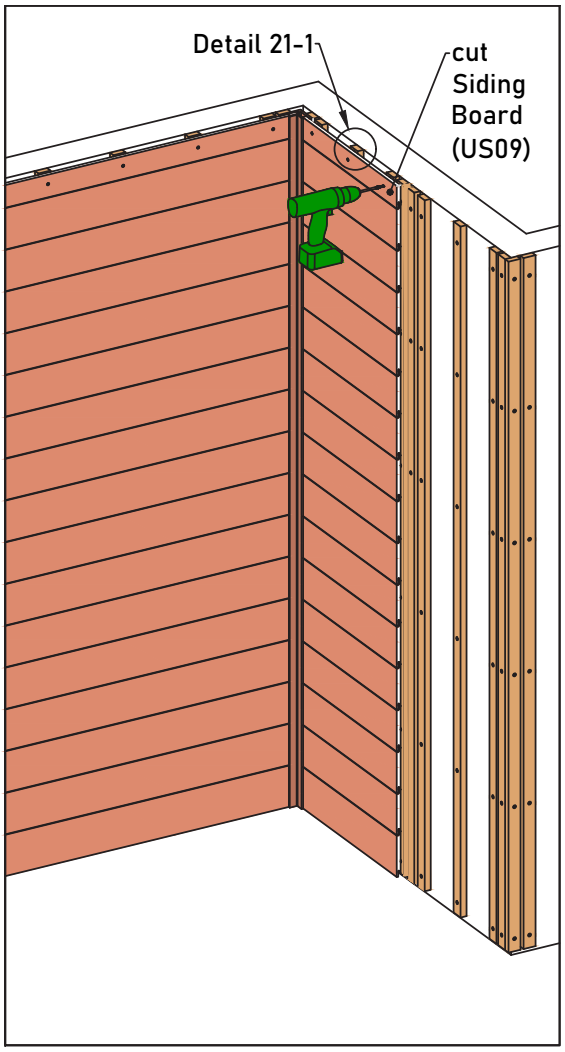


**Diagram 21**

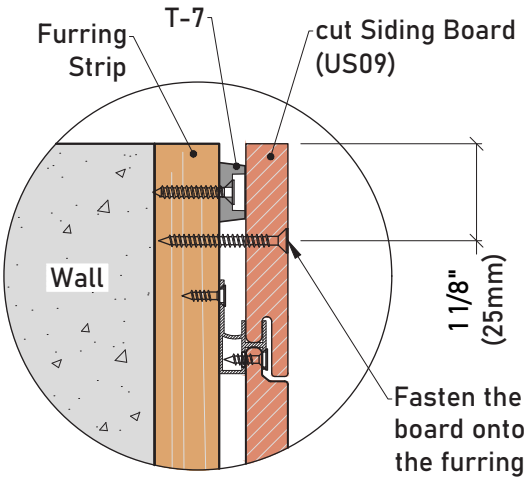


**Detail 21-1**

18 Insert the I-Trim (US45) in place, as shown in ***Diagram 22***.

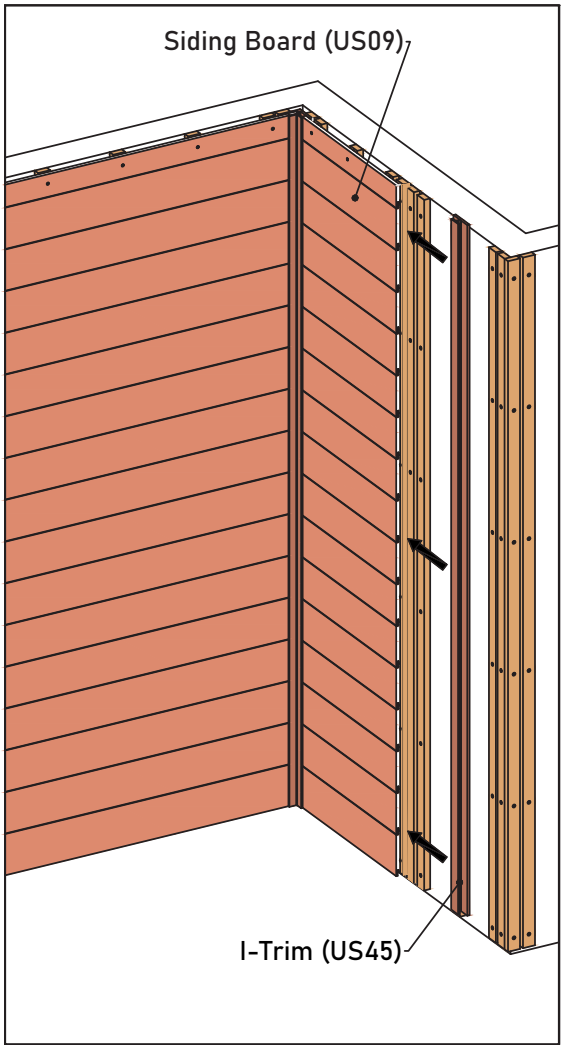


**Diagram 22**

19 Secure the I-Trim (US45) onto the joists with screws, as shown in ***Diagram 23*** and ***Detail 23-1***. The screws in-between distance should be at least 19 5/8" (500mm), and Max. to 39 3/8" (1000mm). ***Detail 23-2*** presents the complete installation structure of the Inside Corner.

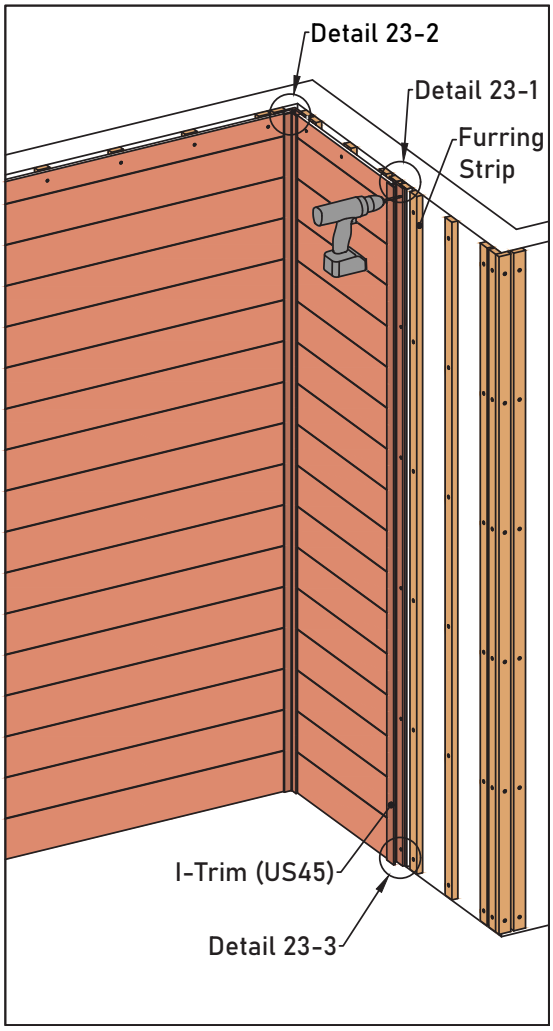


**Diagram 23**

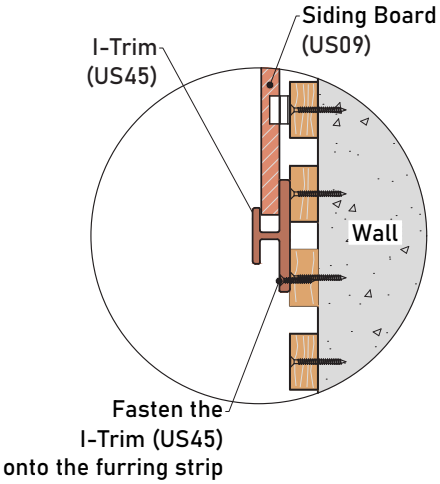


**Detail 23-1**

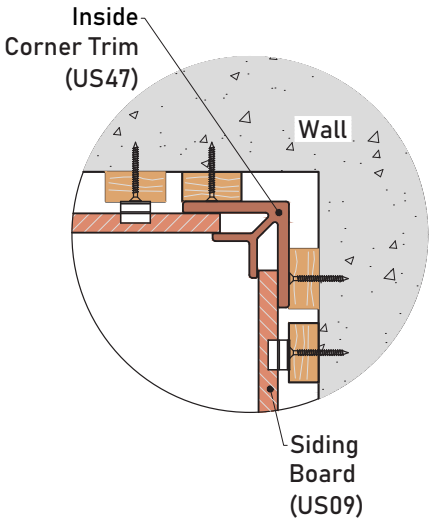


**Detail 23-2**

**Note:**
**1. Pre-drill the holes for the I-Trim (US45) before installation.**

**2. A minimum gap of 3/4" (20mm) needs to be left between the I-Trim (US45) and the floor, as shown in** *Detail 23-3*.

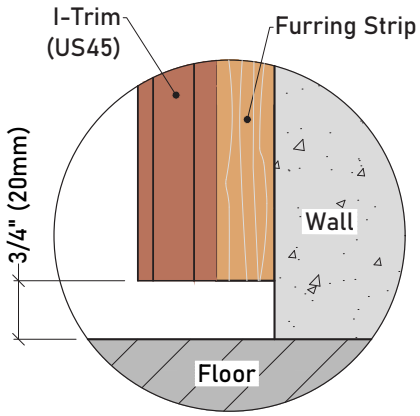


**Detail 23-3**

## 20 Wall Side B (Between the Butt Joint and the Outside Corner)

Install the Starting Trim (AW02) at the joist's bottom with screws, as shown in ***Diagram 24***.

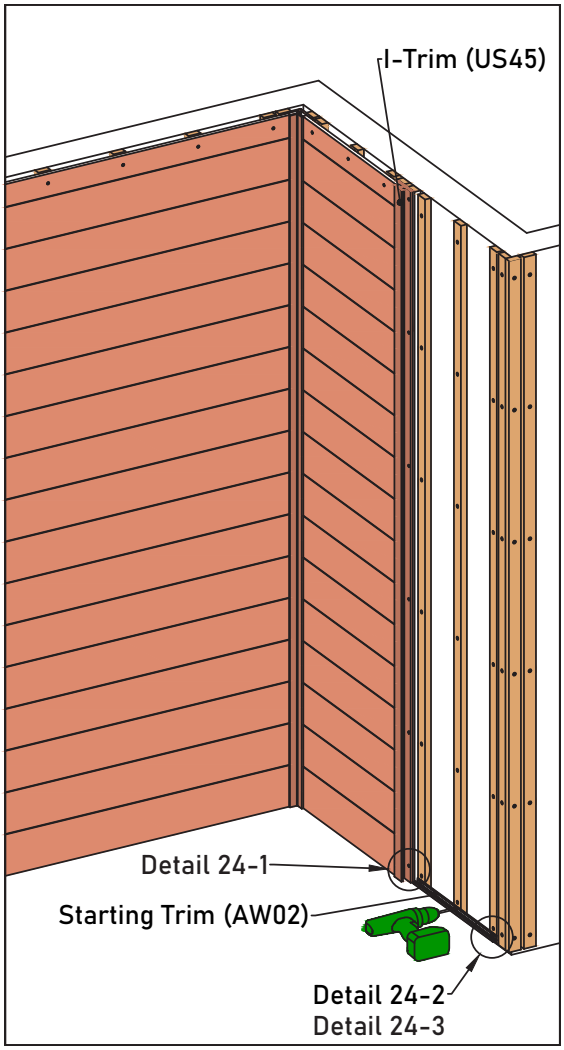


**Diagram 24**

**Note:**

**1. Pre-drill the screw holes for the Starting Trim (AW02) before installation.**

**2. A minimum gap of 3/4" (20mm) needs to be left between the Starting Trim (AW02) and the floor, as shown in** *Detail 24-1*.

**3. A minimum gap of 3/16" (5mm) needs to be left between the Starting Trim (AW02), the Outside Corner Trim (US46), and the I-Trim (US45), as shown in** *Detail 24-2* **and** *Detail 24-3*

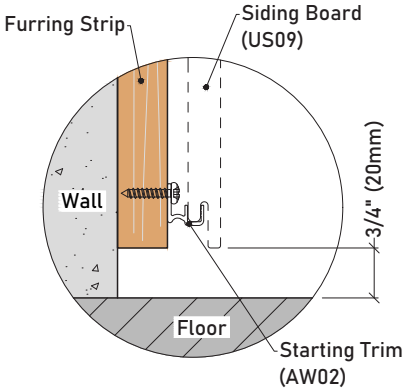


**Detail 24-1**

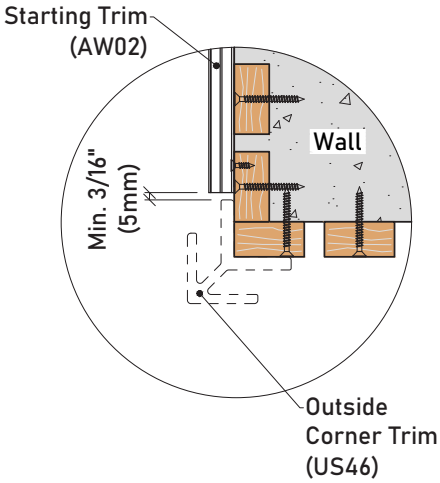


**Detail 24-2**

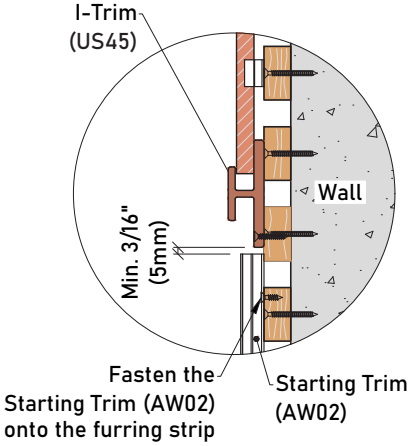


**Detail 24-3**

21 Put the Siding Board (US09) over the Starting Trim (AW08) and fasten it to the joist with Clip (AW08), as shown in ***Diagram 25***.

**Note:**

**1. Since the composite wood must allow for expansion and contraction due to temperature change, the board must be locked at one fixed point but only one point to allow the remaining board to move freely. When installing horizontally, it is required to lock the Clip (AW08) at the middle of each board, as shown in** *Detail 25-1*.

**DO NOT LOCK any other Clip (AW08) for the same board.**

**Please review** *page 12*, **"***Locking the Siding Board***" of this installation guide for further information.**

**2. The gap between the Siding Board (US09), I-Trim (US45), and the Outside Corner Trim (US46) is vital to avoid warping or buckling, as shown in** *Detail 25-2* **and** *Detail 25-3*. **Please select the appropriate gap value according to the** *Expansion and Contraction Values Table* **on** *page 11* **of this installation guide.**

**3. The distance between the Siding Board (US09) and the floor should be at least 3/4" (20mm), as shown in** *Detail 25-4*.

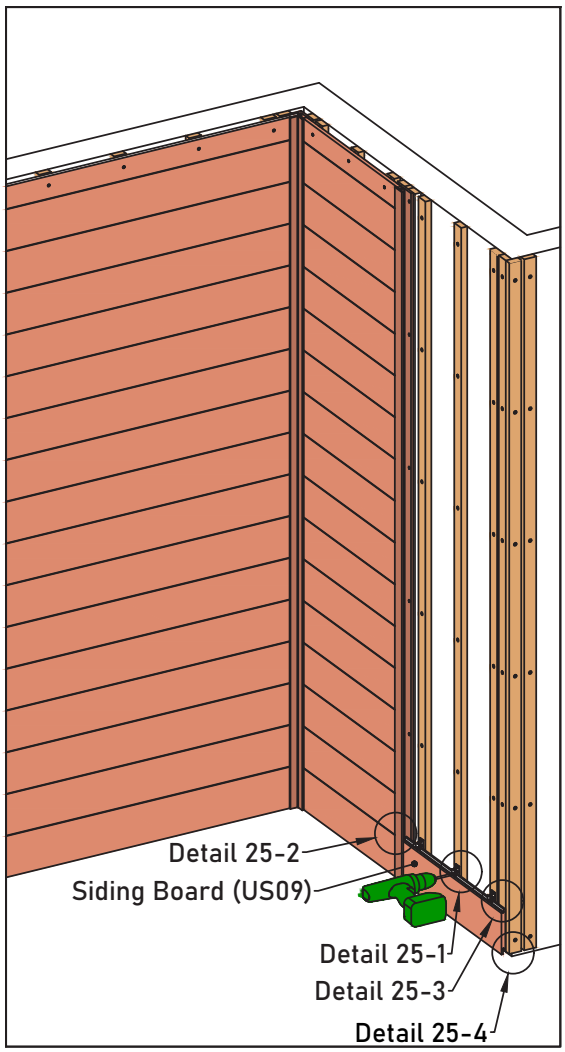


**Diagram 25**

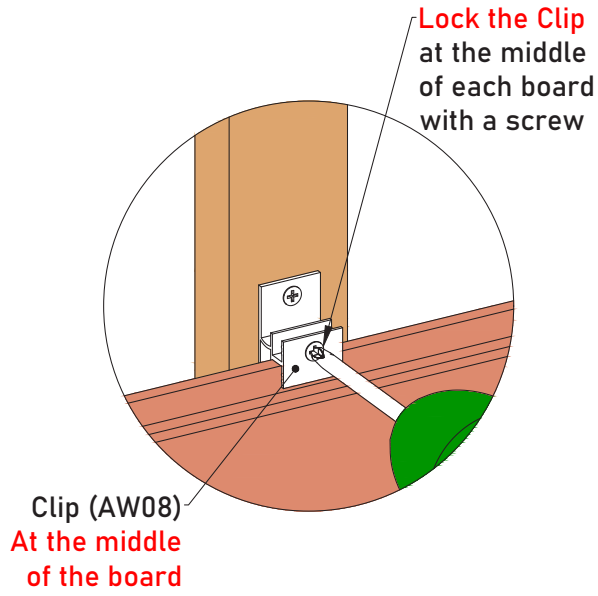


**Detail 25-1**

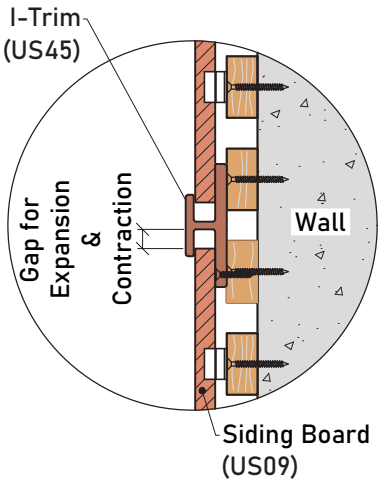


**Detail 25-2**

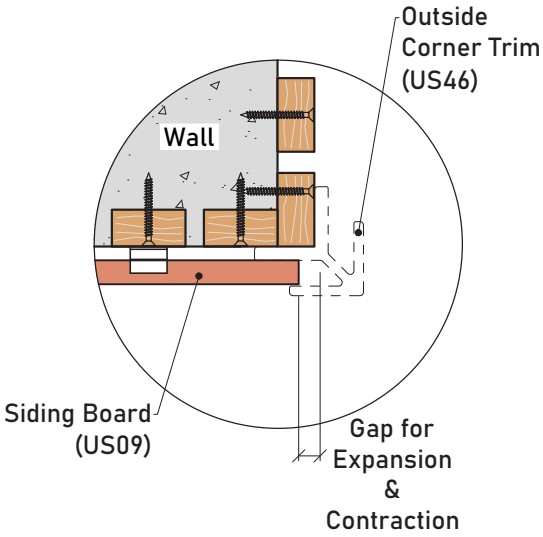


**Detail 25-3**

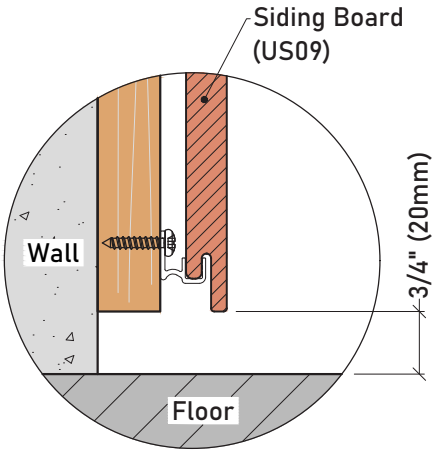


**Detail 25-4**

22 When you are on the Siding's last board, measure the distance between the top of the joist and the Clip (AW08), as shown in ***Diagram 26*** and ***Detail 26-1***.

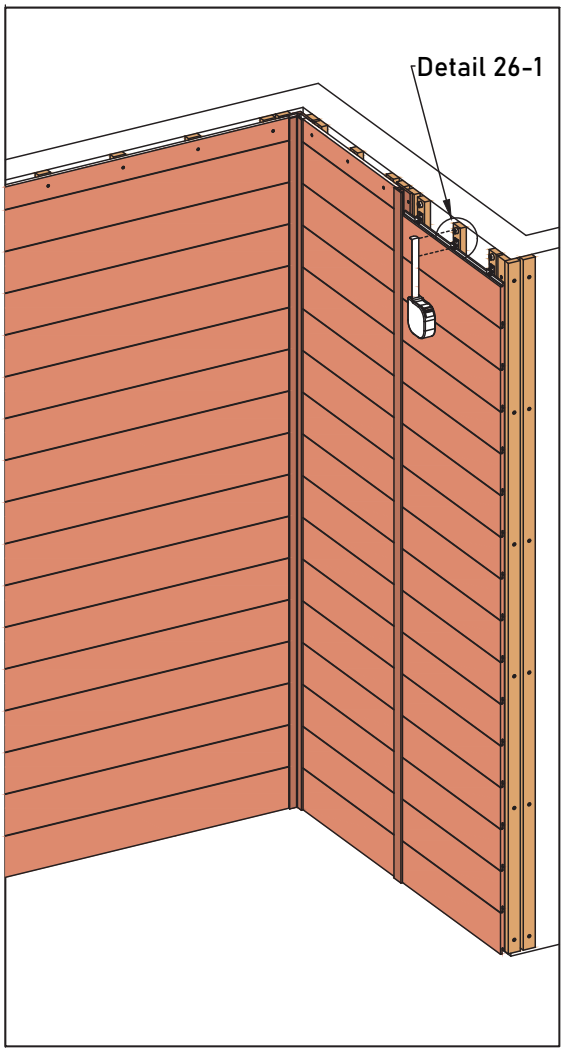


**Diagram 26**

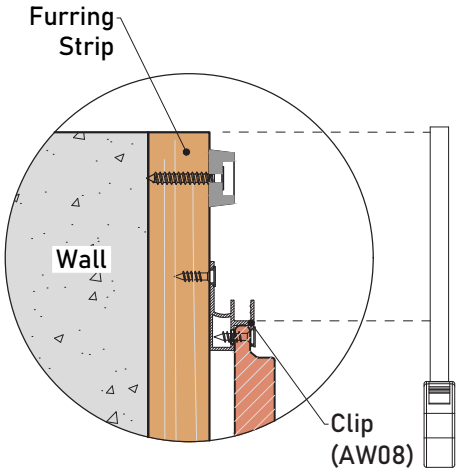


**Detail 26-1**

**23** Cut the Siding Board (US09) according to the measured dimension, as shown in ***Diagram 27*** and ***Detail 27-1***.

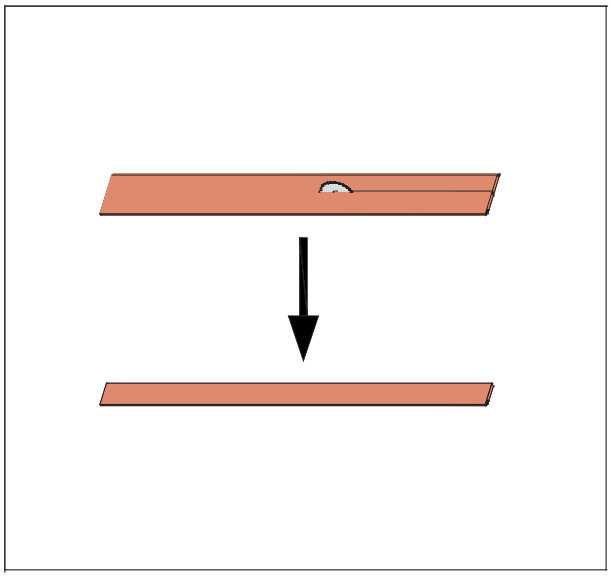

**Diagram 27**

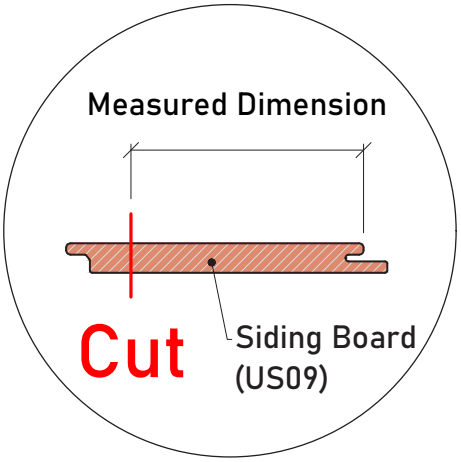


**Detail 27-1**

**24** Then install the Rubber Stopper (T-7) onto each joist with screws, as shown in ***Diagram 28*** and ***Detail 28-1***.

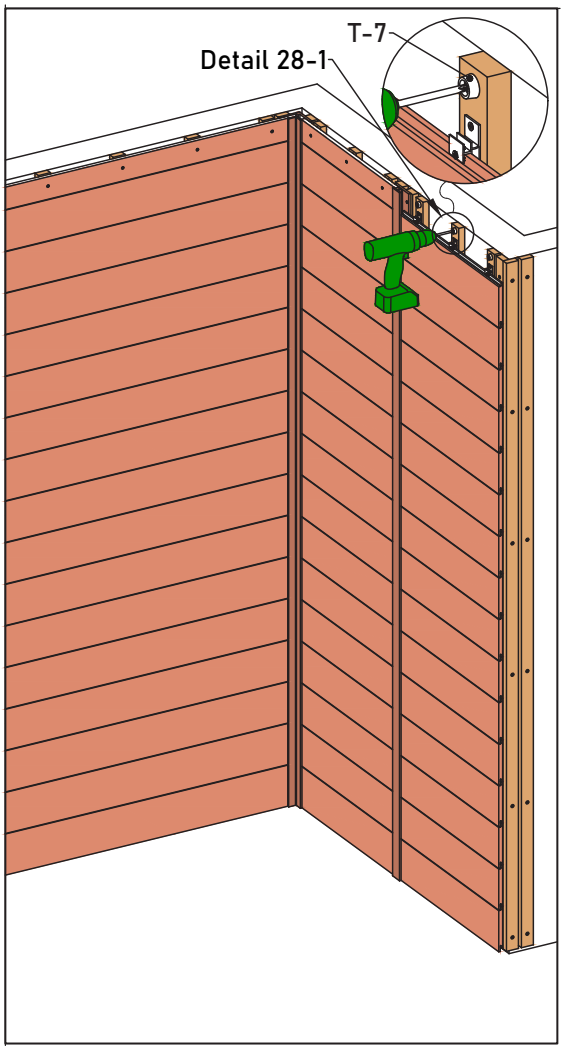


**Diagram 28**

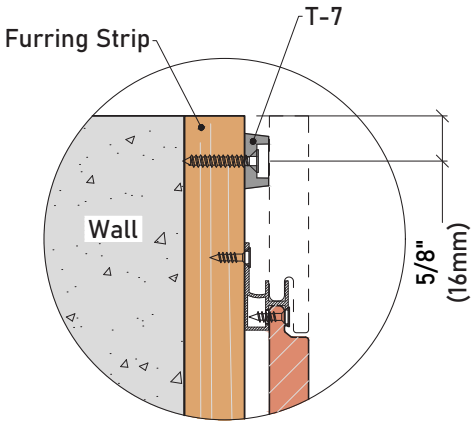


**Detail 28-1**

25 Put the cut Siding Board (US09) over the Clip (AW08) in position and then face fix it onto each joist along the length of the board over the Rubber Stopper (T-7), as shown in ***Diagram 29*** and ***Detail 29-1***. ***Detail 29-2*** presents the complete Installation structure of the Butt Joint.

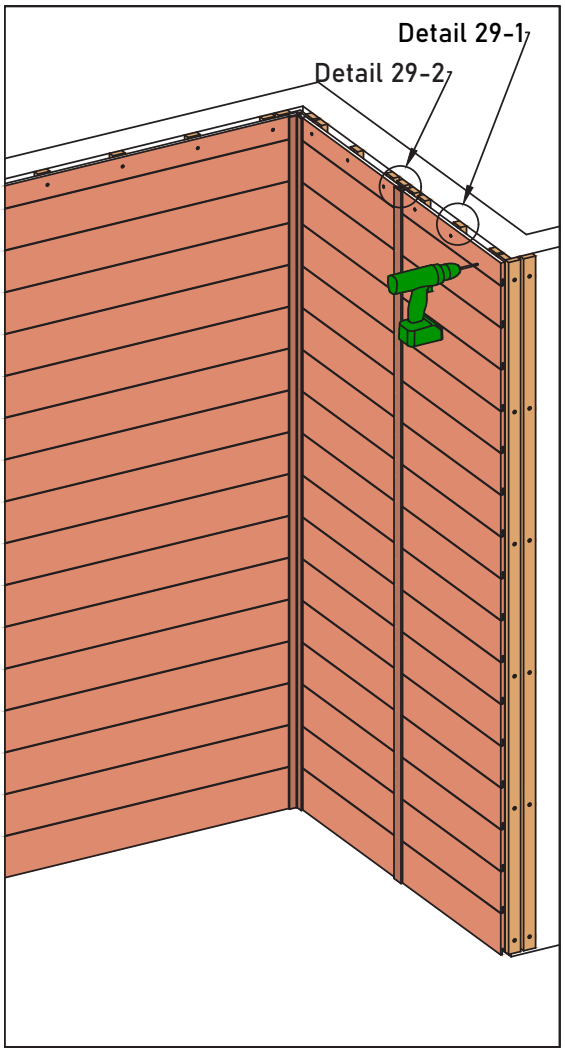


**Diagram 29**

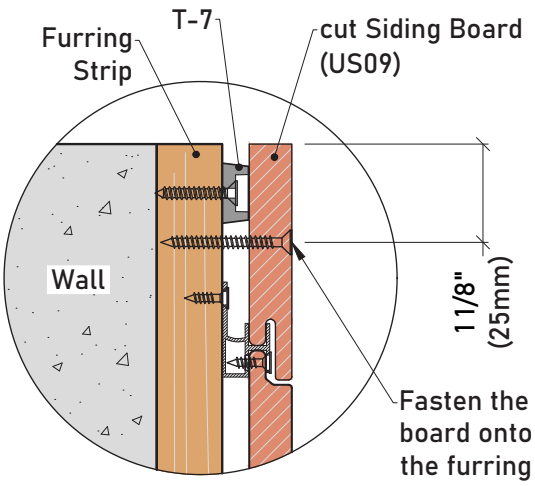


**Detail 29-1**

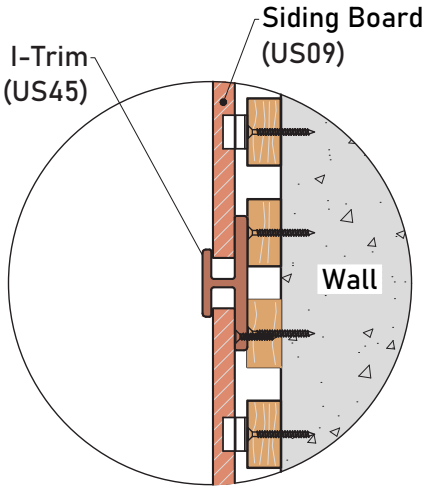


**Detail 29-2**

**26** Insert the Outside Corner Trim (US46) in place, as shown in ***Diagram 30***.

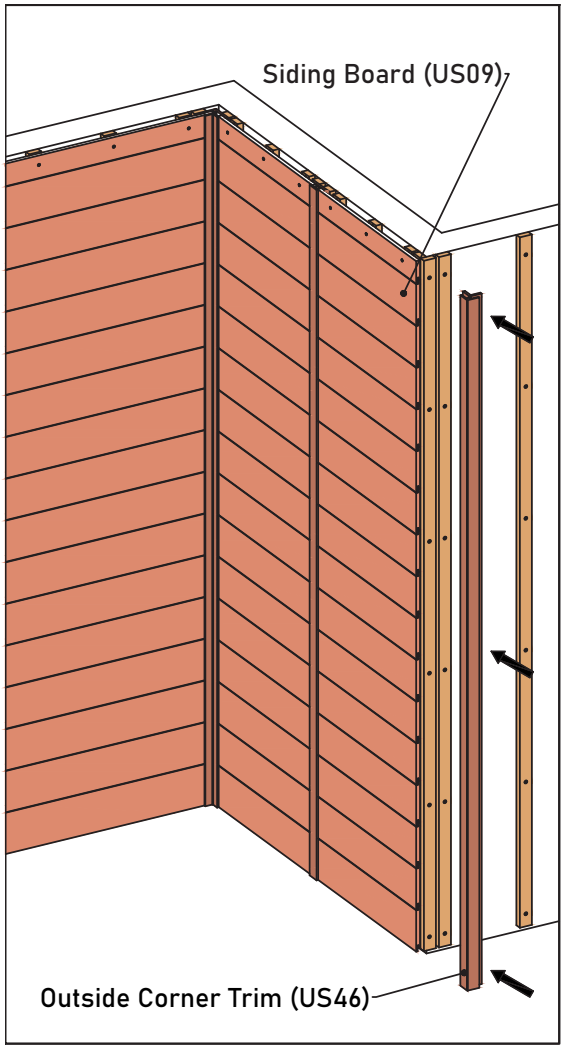


**Diagram 30**

**27** Secure the Outside Corner Trim (US46) onto the joists with screws, as shown in ***Diagram 31*** and ***Detail 31-1***.
The screws in-between distance should be at least 19 5/8" (500mm), and Max. to 39 3/8" (1000mm).

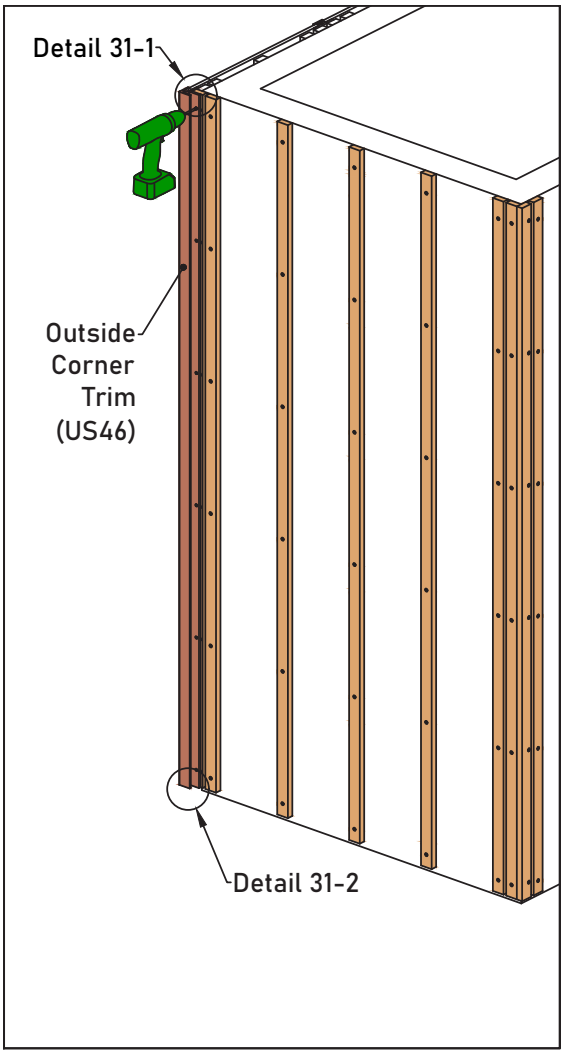


**Diagram 31**

**Note:**
**1. Pre-drill the screw holes for the Outside Corner Trim (US46) before installation.**

**2. A minimum gap of 3/4" (20mm) needs to be left between the Outside Corner Trim (US45) and the floor, as shown in** *Detail 31-2*.

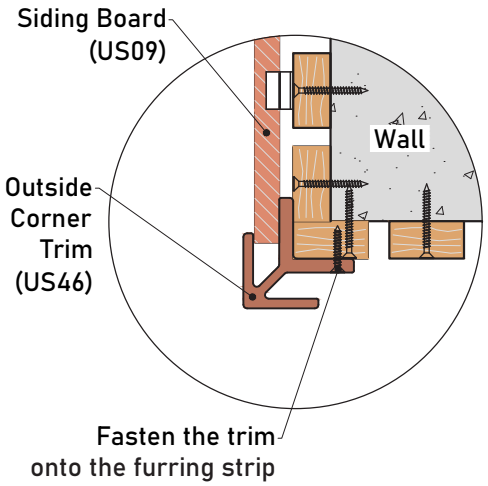


**Detail 31-1**

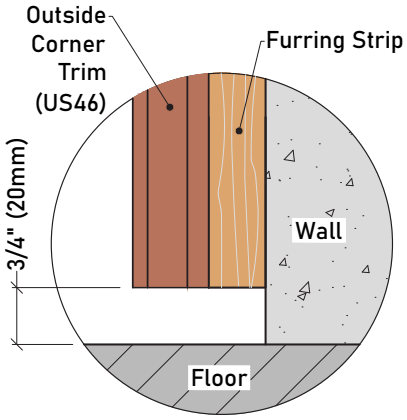


**Detail 31-2**

## 28 Wall Side C (Between the Outside Corners)

Install the Starting Trim (AW02) at the joist's bottom with screws, as shown in ***Diagram 32***.

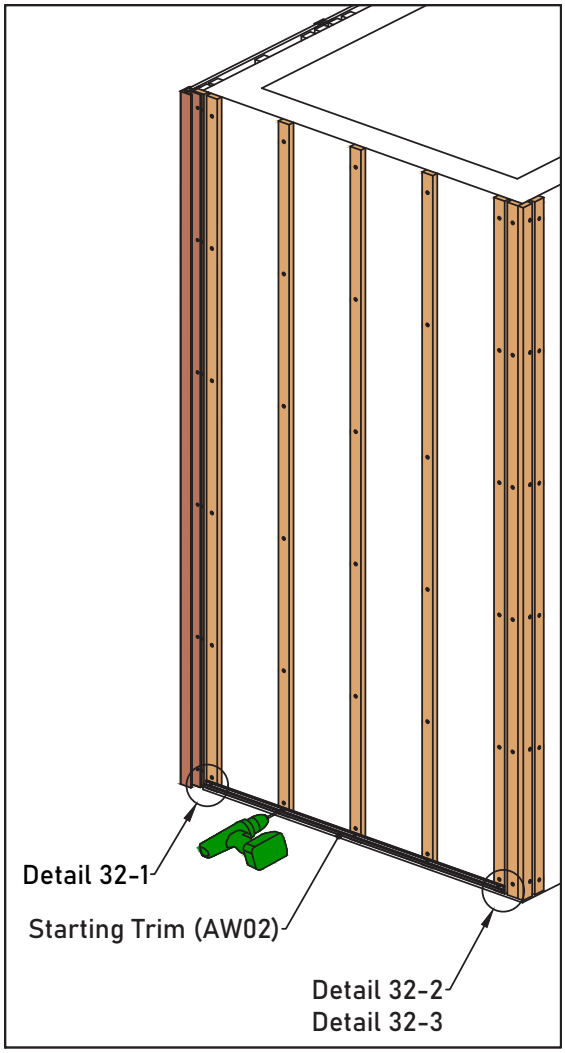


**Diagram 32**

**Note:**
**1. Pre-drill the screw holes for the Starting Trim (AW02) before installation.**

**2. A minimum gap of 3/4" (20mm) needs to be left between the Starting Trim (AW02) and the floor, as shown in** *Detail 32-1*.

**3. A minimum gap of 3/16" (5mm) needs to be left between the Starting Trim (AW02) and the Outside Corner Trim (US46), as shown in** *Detail 32-2* **and** *Detail 32-3*

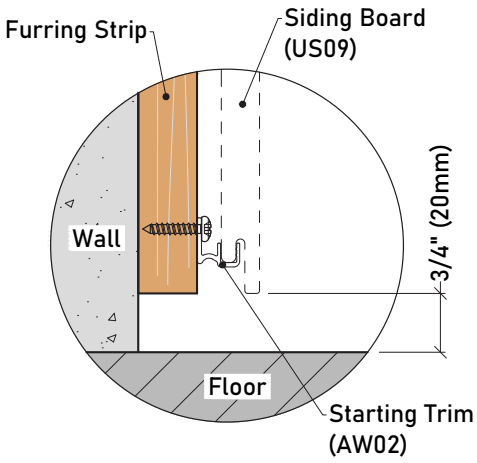


**Detail 32-1**

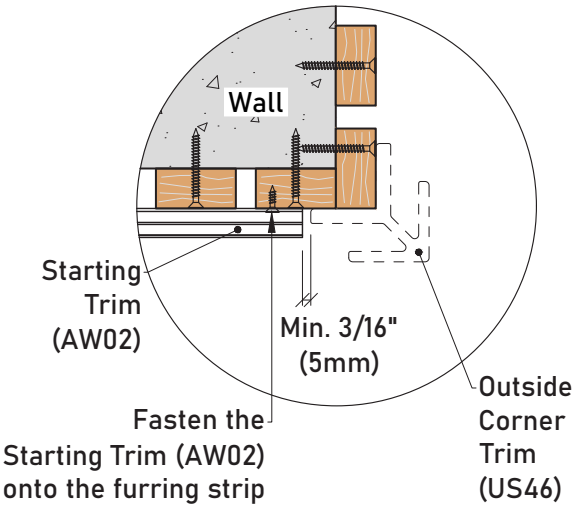


**Detail 32-2**

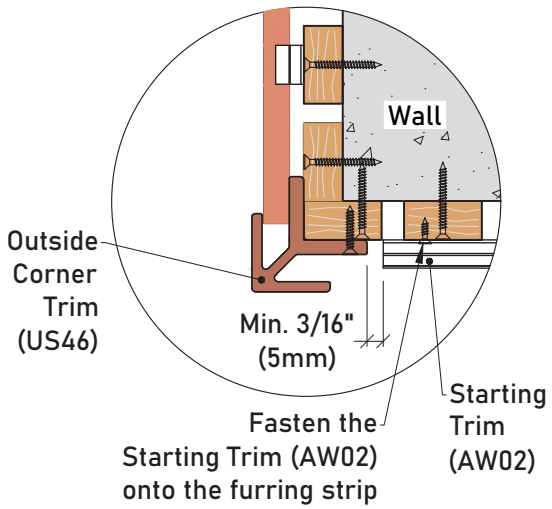


**Detail 32-3**

**29** Put the Siding Board (US09) over the Starting Trim (AW08) and fasten it to the joist with Clip (AW08), as shown in ***Diagram 33***.

**Note:**

**1. Since the composite wood must allow for expansion and contraction due to temperature change, the board must be locked at one fixed point but only one point to allow the remaining board to move freely. When installing horizontally, it is required to lock the Clip (AW08) at the middle of each board, as shown in** *Detail 33-1*.
**DO NOT LOCK any other Clip (AW08) for the same board.**
**Please review** *page 12*, "*Locking the Siding Board*" **of this installation guide for further information.**

**2. The gap between the Siding Board (US09) and the Outside Corner Trims (US46) is vital to avoid warping or buckling, as shown in** *Detail 33-2* **and** *Detail 33-3*. **Please select the appropriate gap value according to the** *Expansion and Contraction Values Table* **on** *page 11* **of this installation guide.**

**3. The distance between the Siding Board (US09) and the floor should be at least 3/4" (20mm), as shown in** *Detail 33-4*.

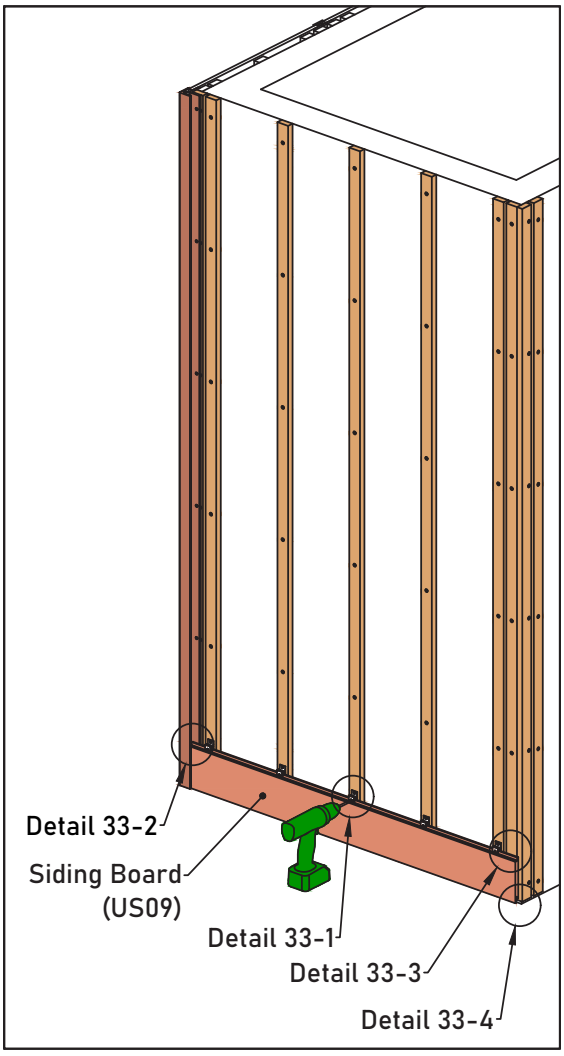


**Diagram 33**

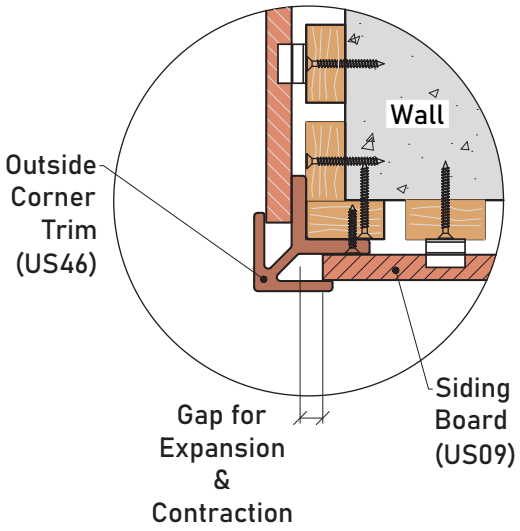


**Detail 33-2**

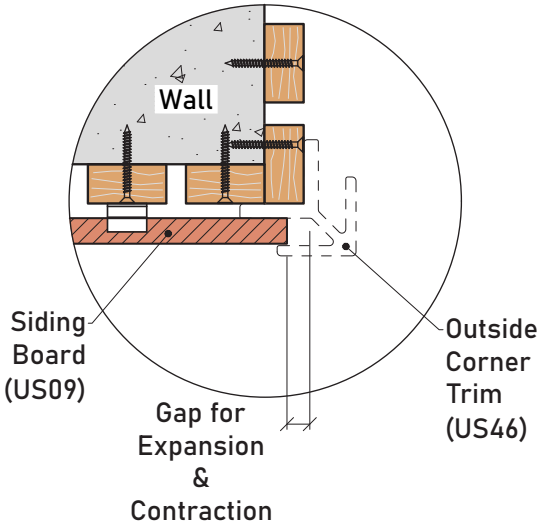


**Detail 33-3**

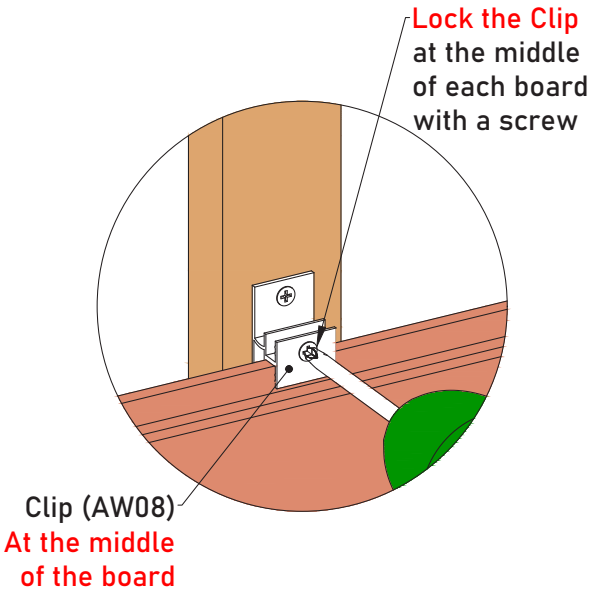


**Detail 33-1**

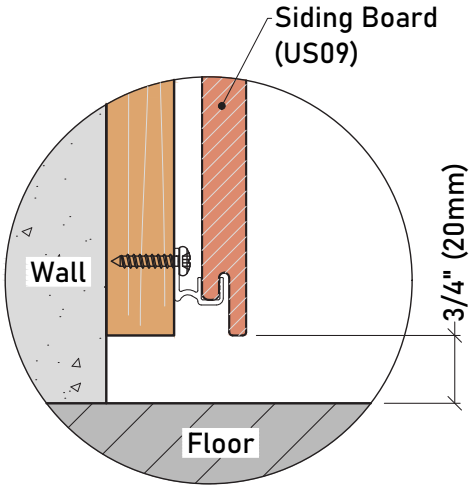


**Detail 33-4**

**30** When you are on the Siding's last board, measure the distance between the top of the joist and the Clip (AW08), as shown in ***Diagram 34*** and ***Detail 34-1***.

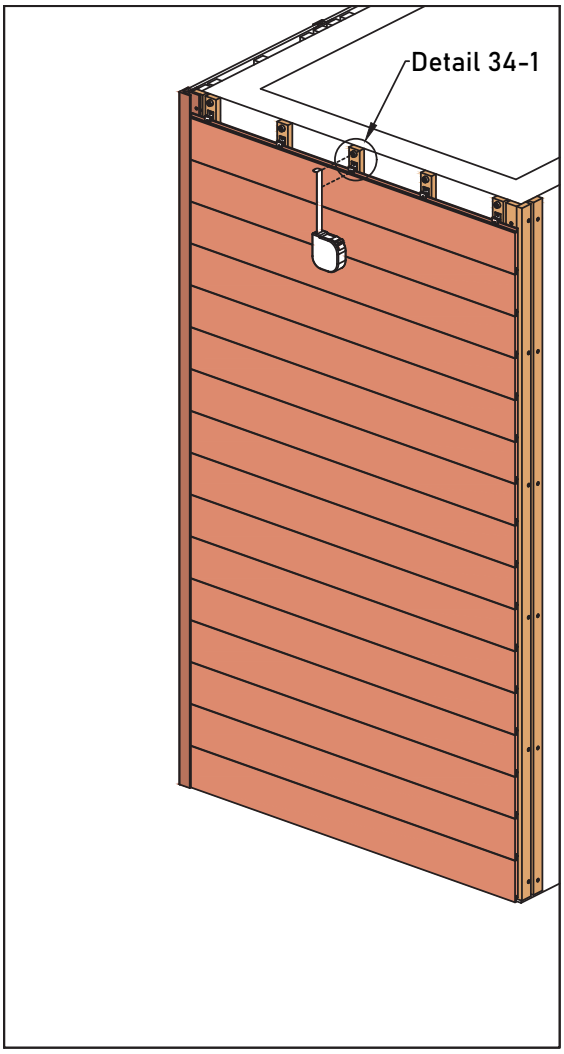


**Diagram 34**

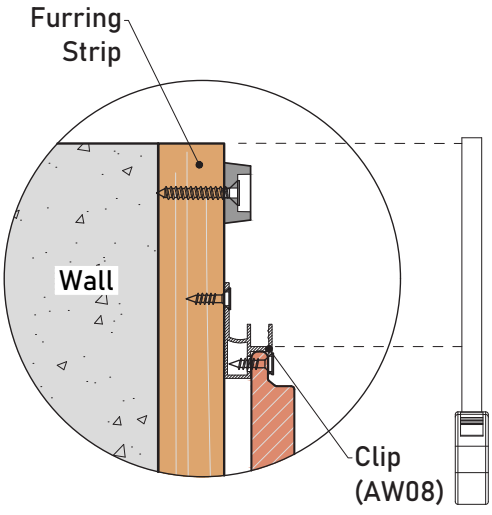


**Detail 34-1**

**31** Cut the Siding Board (US09) according to the measured dimension, as shown in ***Diagram 35*** and ***Detail 35-1***.

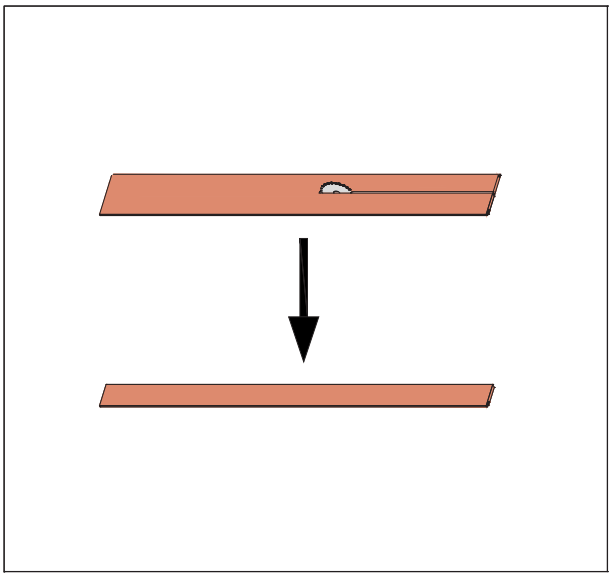

**Diagram 35**

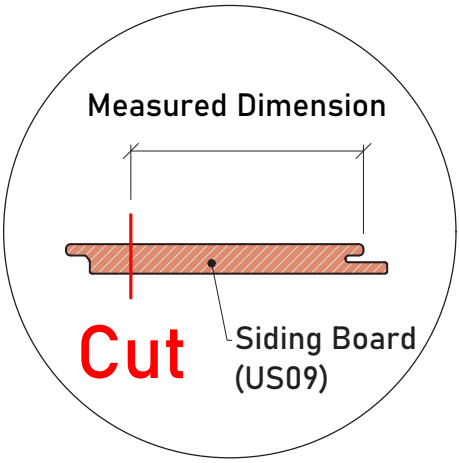


**Detail 35-1**

**32** Then install the Rubber Stopper (T-7) onto each joist with screws, as shown in ***Diagram 36*** and ***Detail 36-1***.

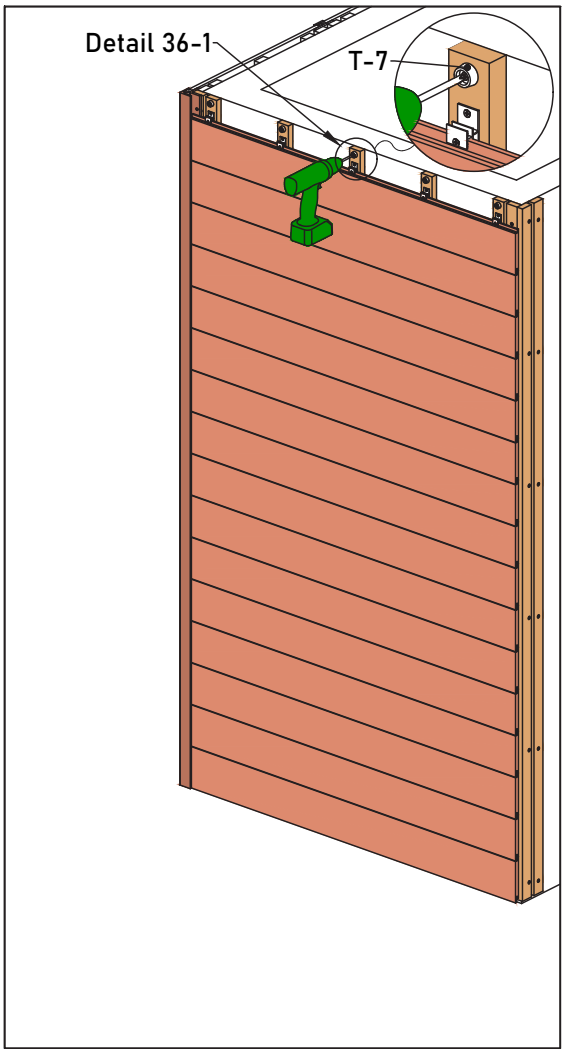


**Diagram 36**

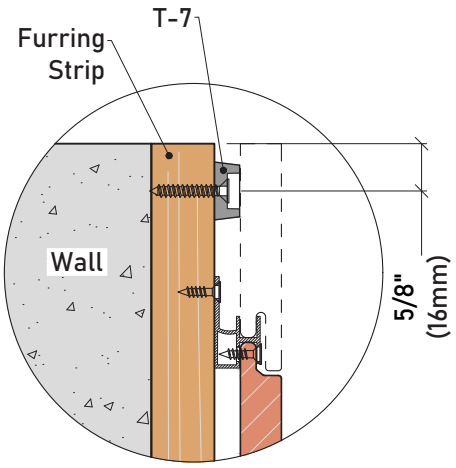


**Detail 36-1**

**33** Put the cut Siding Board (US09) over the Clip (AW08) in position and then face fix it onto each joist along the length of the board over the Rubber Stopper (T-7), as shown in ***Diagram 37*** and ***Detail 37-1***. ***Detail 37-2*** presents the complete Installation structure of the Outside Corner.

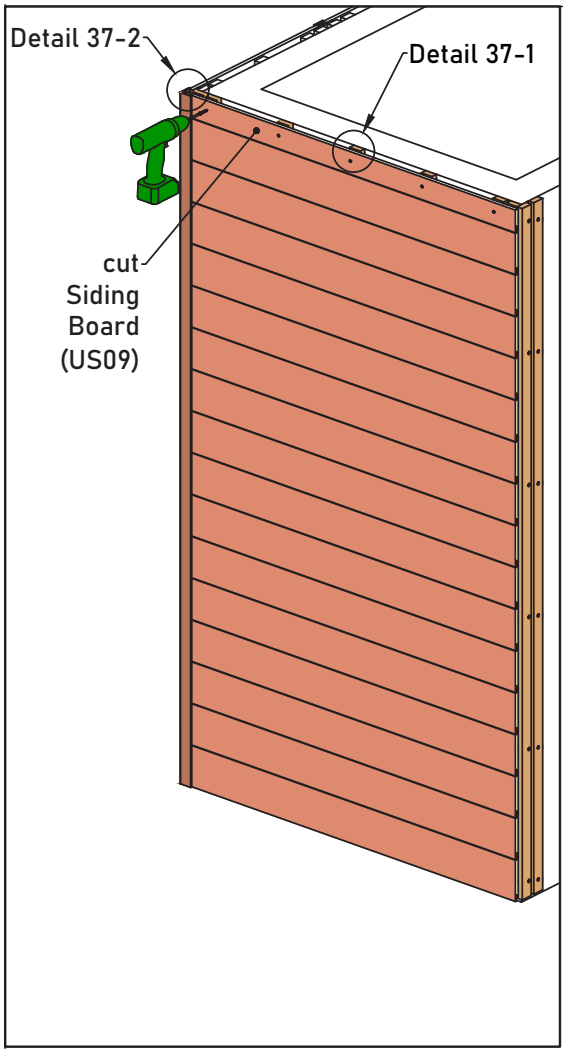


**Diagram 37**

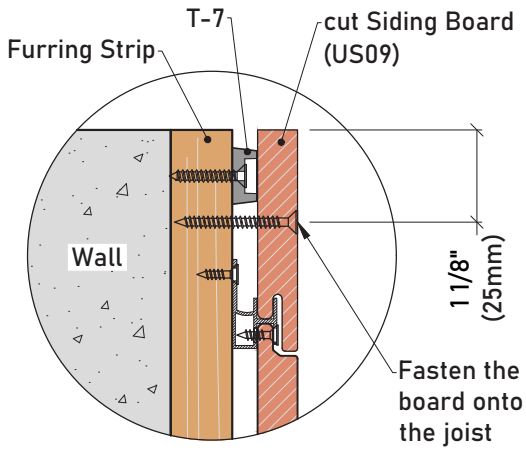


**Detail 37-1**

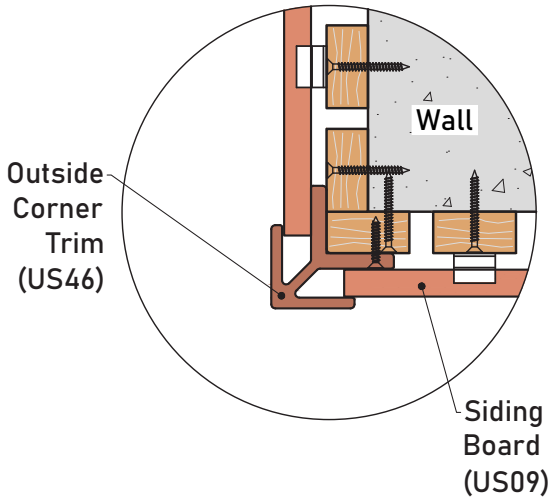


**Detail 37-2**

34 Insert the Outside Corner Trim (US46) in place, as shown in ***Diagram 38***.

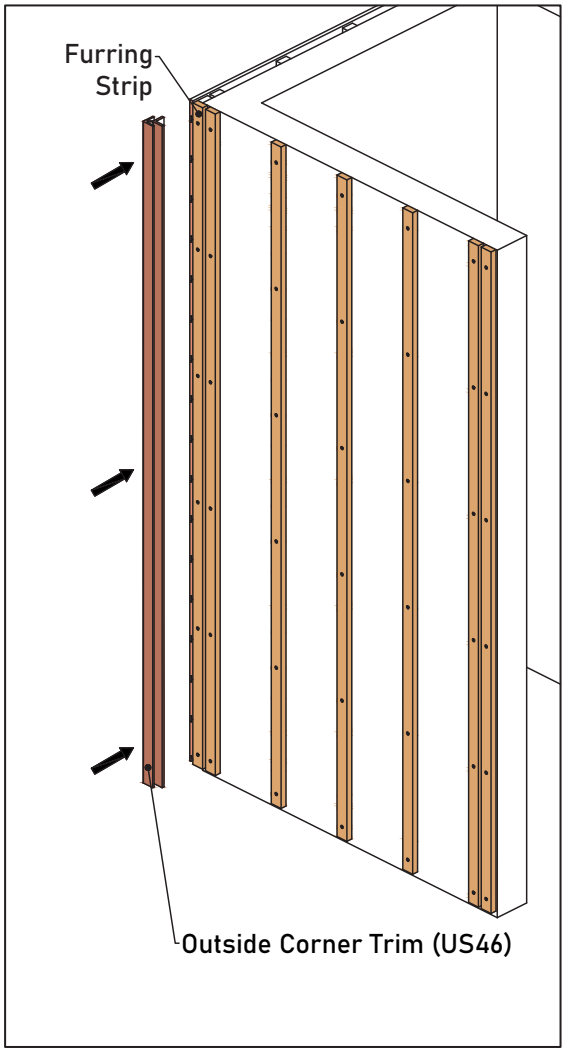


**Diagram 38**

35 Secure the Outside Corner Trim (US46) onto the joists with screws, as shown in ***Diagram 39*** and ***Detail 39-1***.
The screws in-between distance should be at least 19 5/8" (500mm), and Max. to 39 3/8" (1000mm).

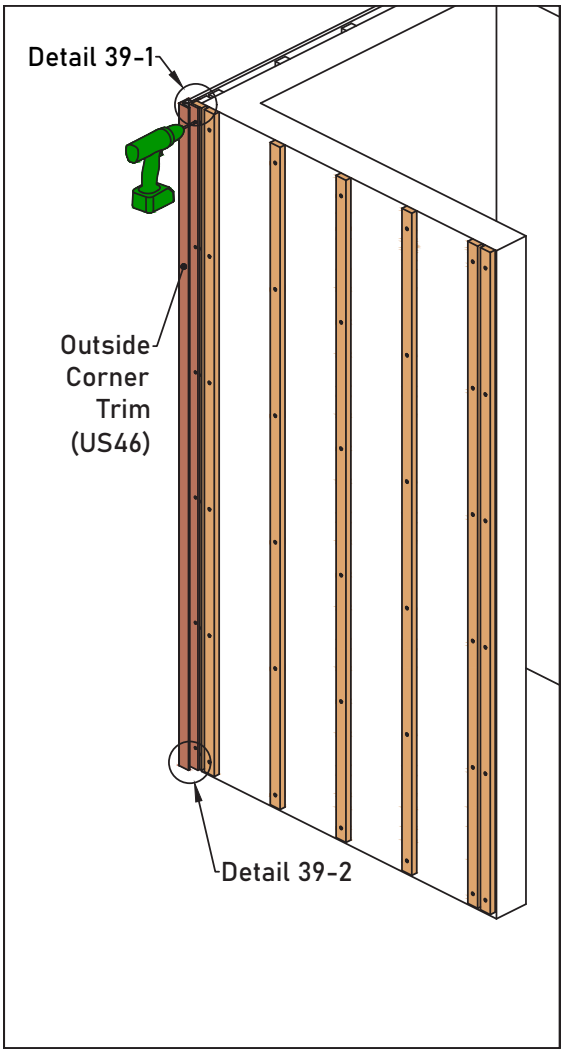


**Diagram 39**

**Note:**
**1. Pre-drill the screw holes for the Outside Corner Trim (US46) before installation.**

**2. A minimum gap of 3/4" (20mm) needs to be left between the Outside Corner Trim (US45) and the floor, as shown in** *Detail 39-2*.

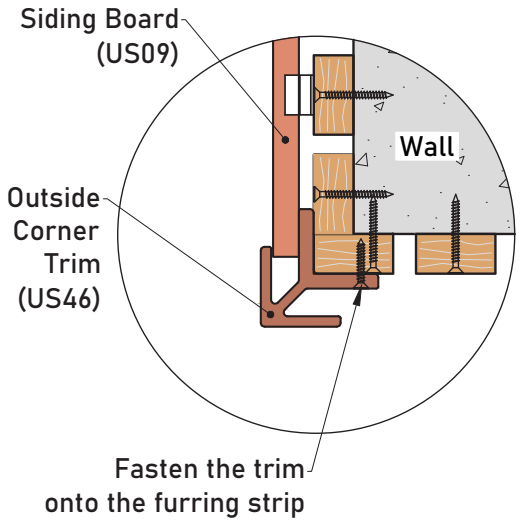


**Detail 39-1**

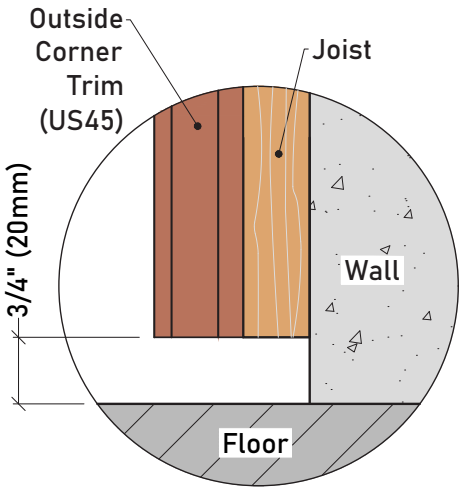


**Detail 39-2**

## 36 Wall Side D
## (Between the Outside Corner and the Outermost Edge)

Install the Starting Trim (AW02) at the joist's bottom with screws, as shown in ***Diagram 40***.

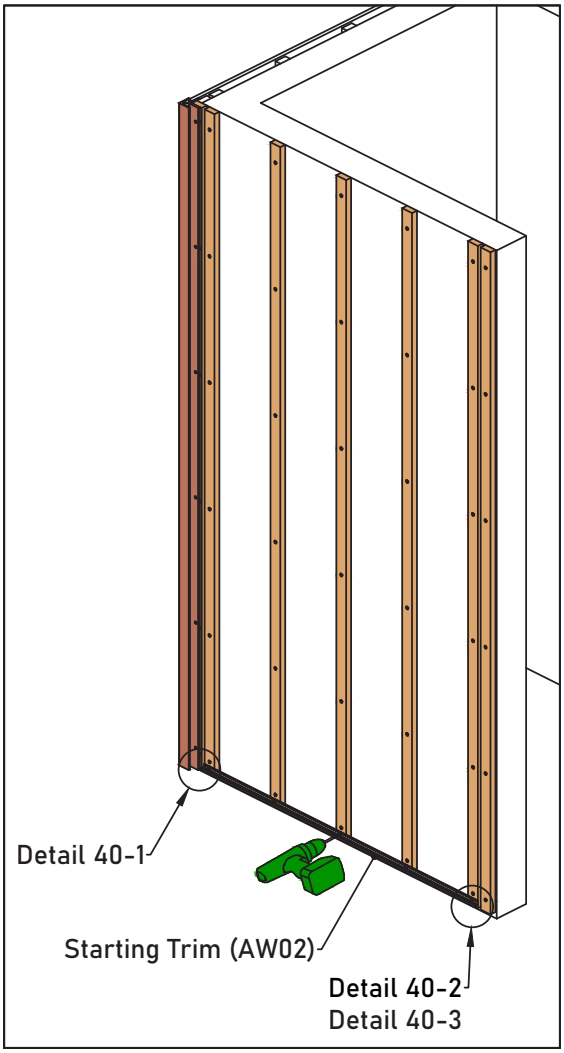


**Diagram 40**

**Note:**
**1. Pre-drill the screw holes for the Starting Trim (AW02) before installation.**

**2. A minimum gap of 3/4" (20mm) needs to be left between the Starting Trim (AW02) and the floor, as shown in** *Detail 40-1*.

**3. A minimum gap of 3/16" (5mm) needs to be left between the Starting Trim (AW02) ,the F-Trim (US44), and the Outside Corner Trim (US46), as shown in** *Detail 40-2* **and** *Detail 40-3*

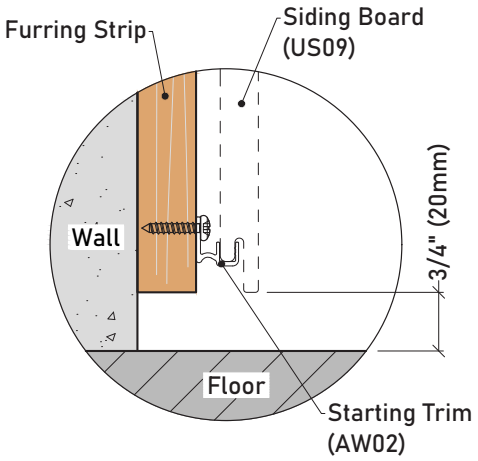


**Detail 40-1**

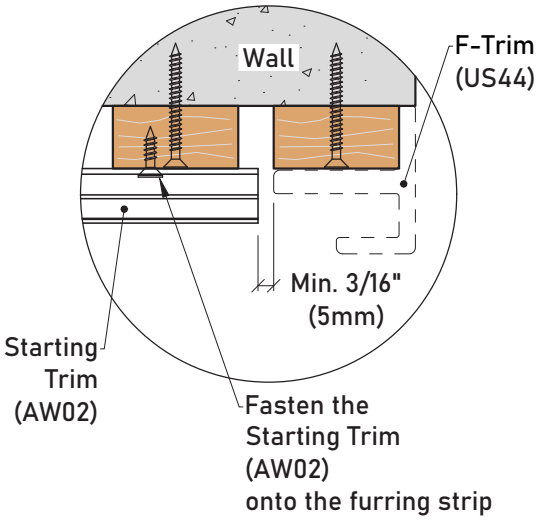


**Detail 40-2**

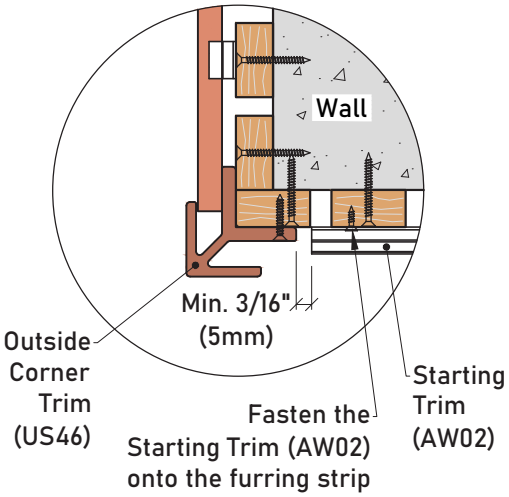


**Detail 40-3**

**37** Put the Siding Board (US09) over the Starting Trim (AW08) and fasten it to the joist with Clip (AW08), as shown in ***Diagram 41***.

**Note:**

**1. Since the composite wood must allow for expansion and contraction due to temperature change, the board must be locked at one fixed point but only one point to allow the remaining board to move freely. When installing horizontally, it is required to lock the Clip (AW08) at the middle of each board, as shown in** *Detail 41-1*.

**DO NOT LOCK any other Clip (AW08) for the same board.**

**Please review** *page 12*, **"***Locking the Siding Board***" of this installation guide for further information.**

**2. The gap between the Siding Board (US09) and the Outside Corner Trims (US46) is vital to avoid warping or buckling, as shown in** *Detail 41-2* **and** *Detail 41-3*. **Please select the appropriate gap value according to the** *Expansion and Contraction Values Table* **on** *page 11* **of this installation guide.**

**3. The distance between the Siding Board (US09) and the floor should be at least 3/4" (20mm), as shown in** *Detail 41-4*.

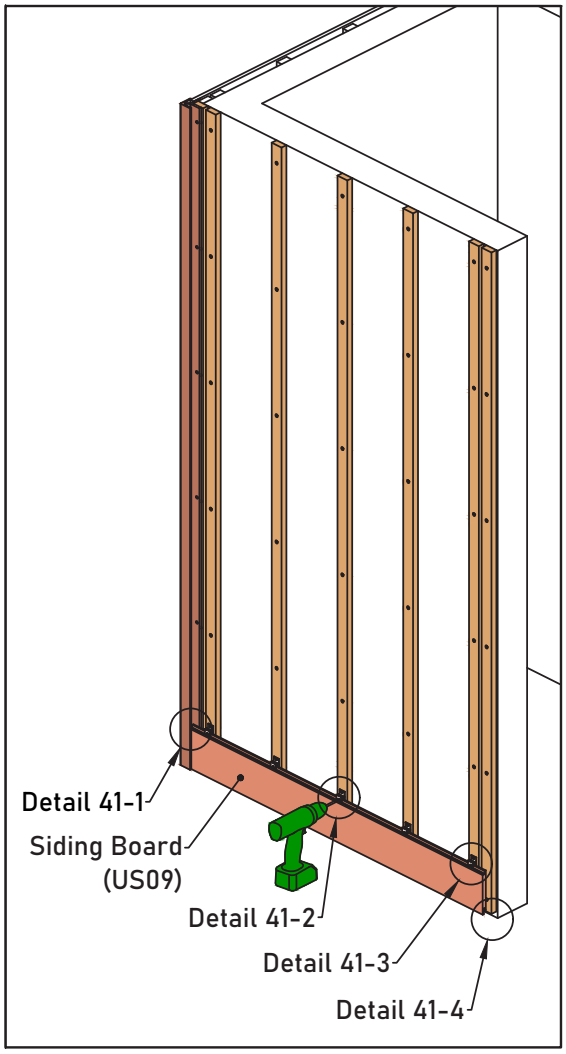


**Diagram 41**

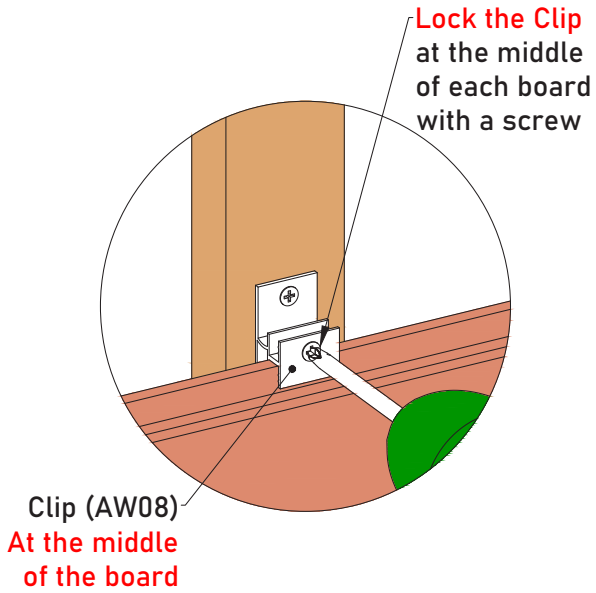


**Detail 41-1**

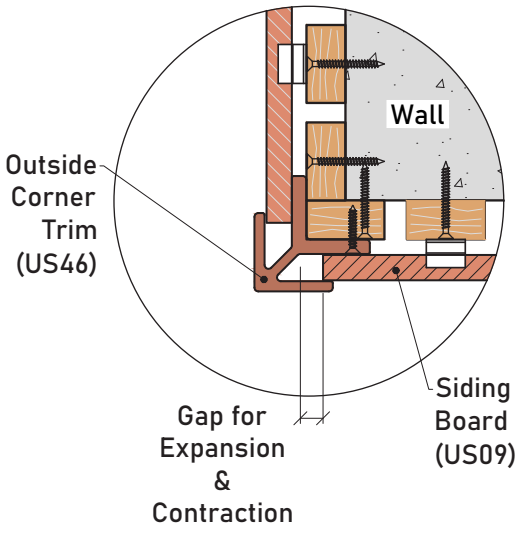


**Detail 41-2**

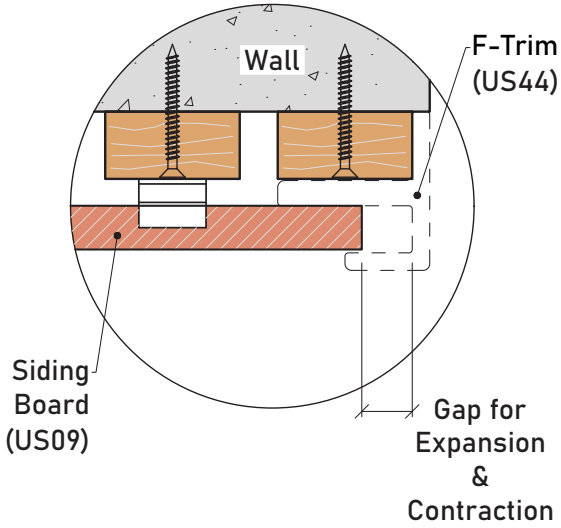


**Detail 41-3**

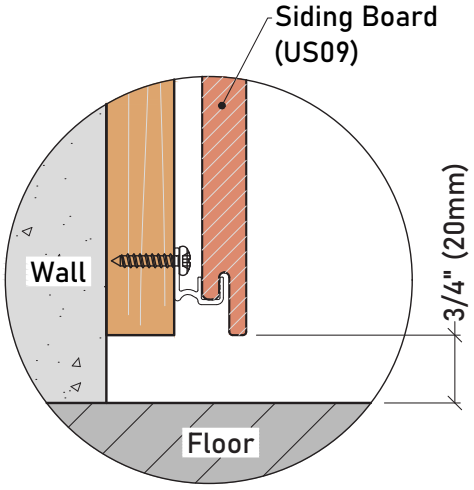


**Detail 41-4**

38 When you are at the Siding's last board, measure the distance between the joist and the Clip (AW08), as shown in ***Diagram 42*** and ***Detail 42-1***.

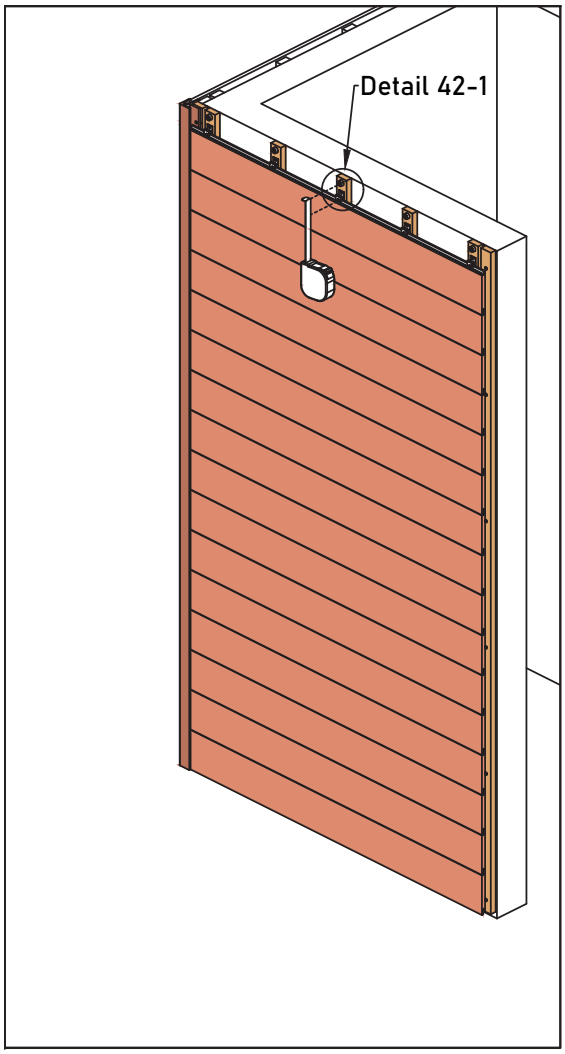


**Diagram 42**

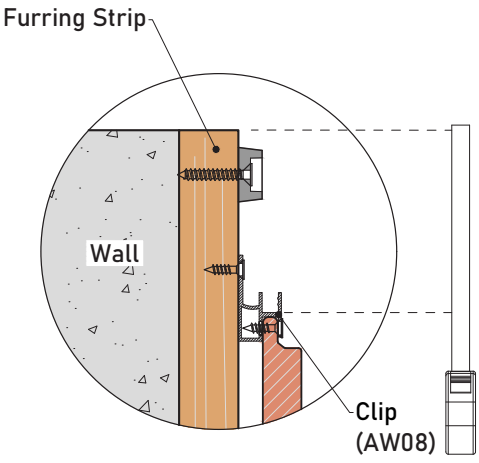


**Detail 42-1**

**39** Cut the Siding Board (US09) according to the measured dimension, as shown in ***Diagram 43*** and ***Detail 43-1***.

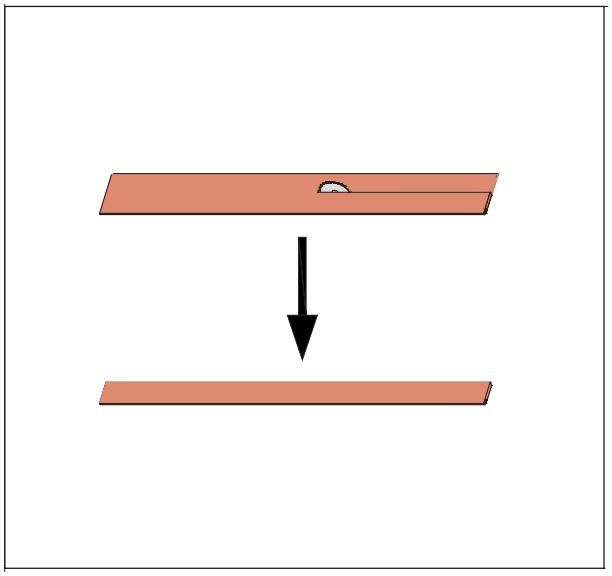

**Diagram 43**

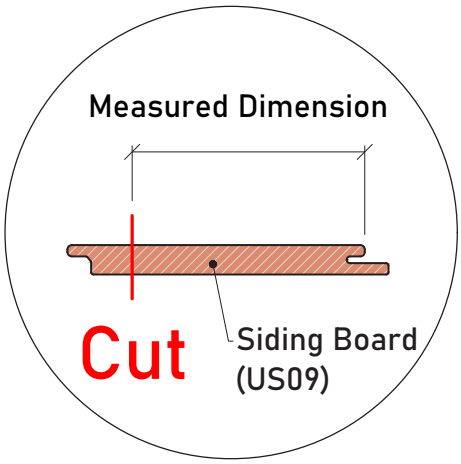


**Detail 43-1**

**40** Then install the Rubber Stopper (T-7) onto each joist with screws, as shown in ***Diagram 44*** and ***Detail 44-1***.

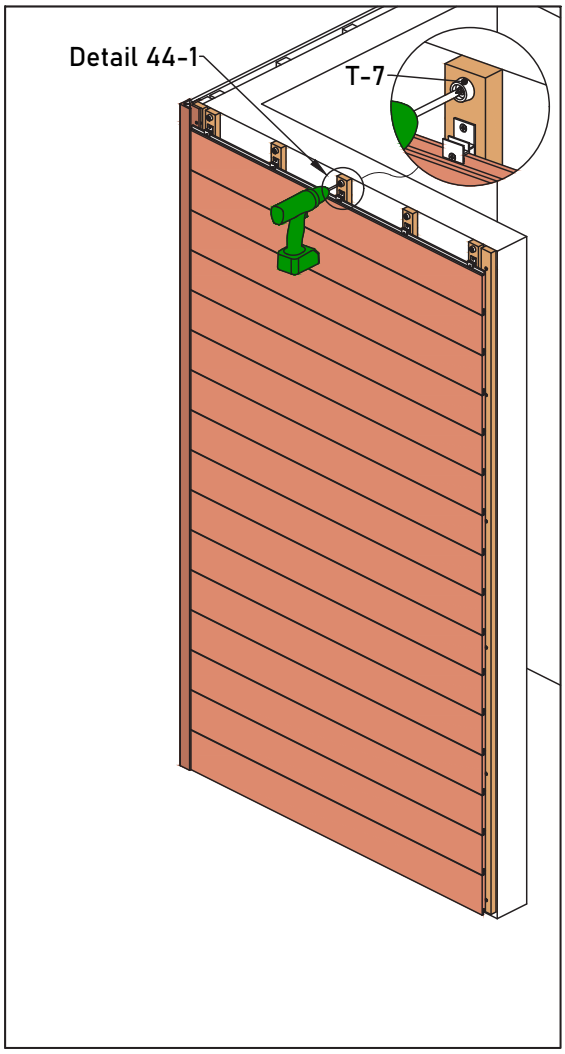


**Diagram 44**

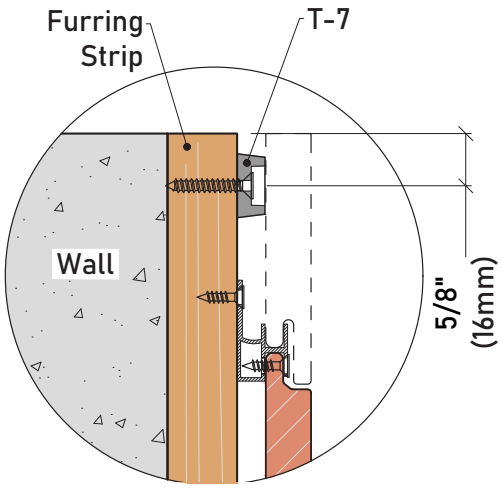


**Detail 44-1**

41 Put the cut Siding Board (US09) over the Clip (AW08) in position and then face fix it onto each joist along the length of the board over the Rubber Stopper (T-7), as shown in ***Diagram 45*** and ***Detail 45-1***. ***Detail 45-2*** presents the complete Installation structure of the Outside Corner.

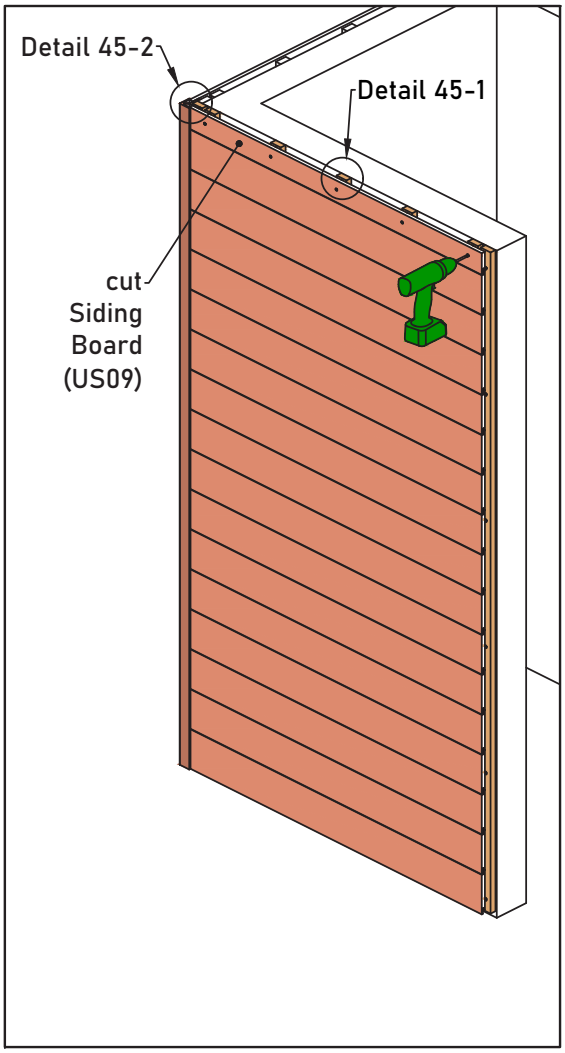


**Diagram 45**

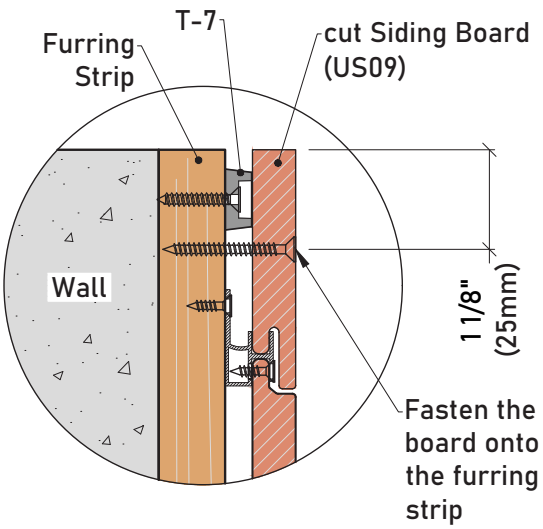


**Detail 45-1**

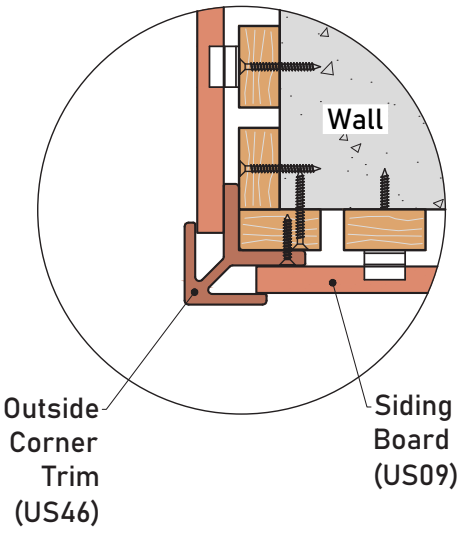


**Detail 45-2**

**42** Insert the F-Trim (US44) in place, as shown in ***Diagram 46***.

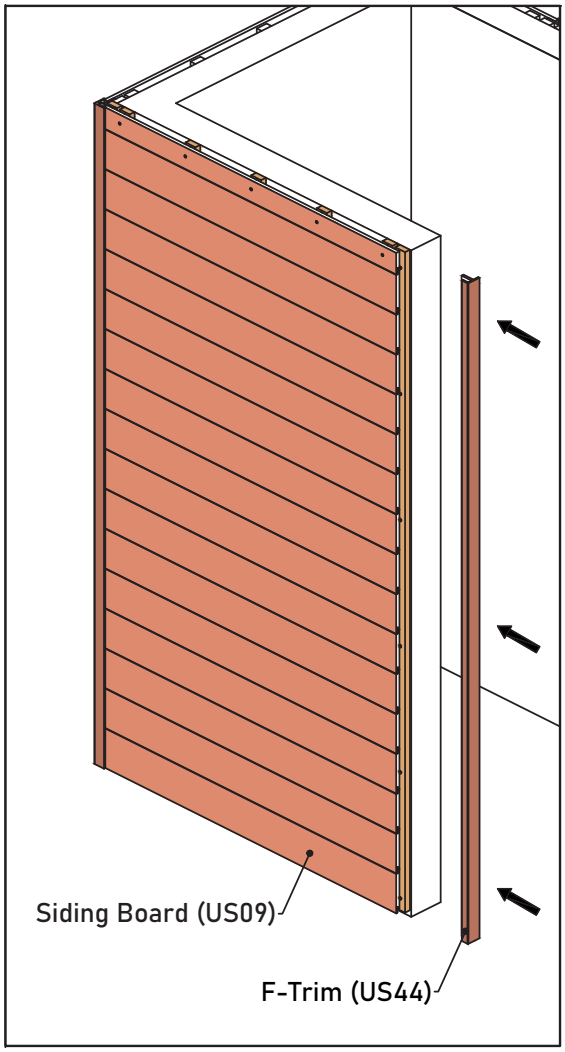


**Diagram 46**

**43** Secure the F-Trim (US44) onto the joists with screws, as shown in ***Diagram 47*** and ***Detail 47-1***.
The screws in-between distance should be at least 19 5/8" (500mm), and Max. to 39 3/8" (1000mm).

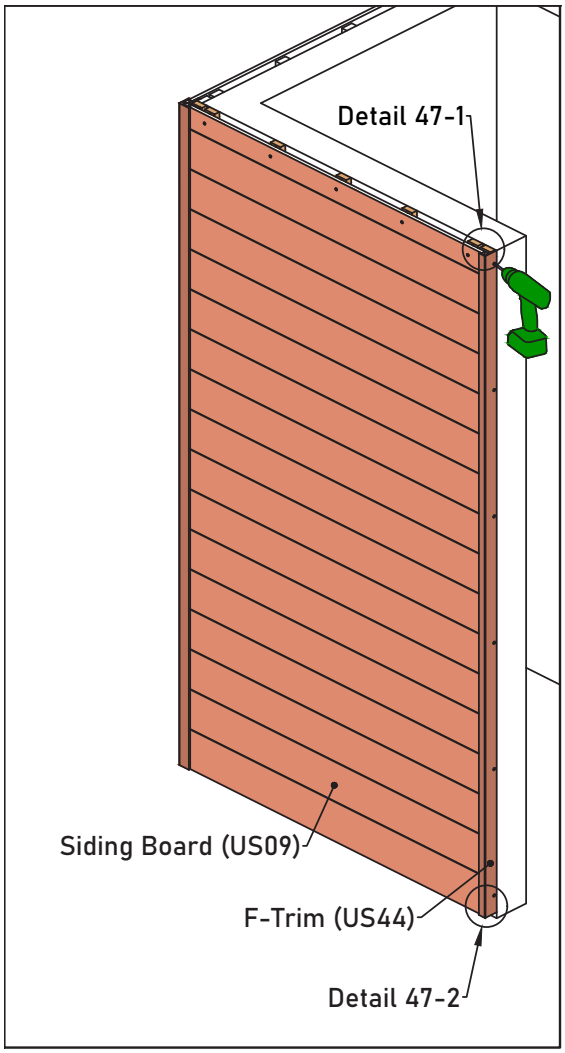


**Diagram 47**

**Note:**
**1. Pre-drill the screw holes for the F-Trim (US44) before installation.**

**2. A minimum gap of 3/4" (20mm) needs to be left between the F-Trim (US44) and the floor, as shown in *Detail 47-2*.**

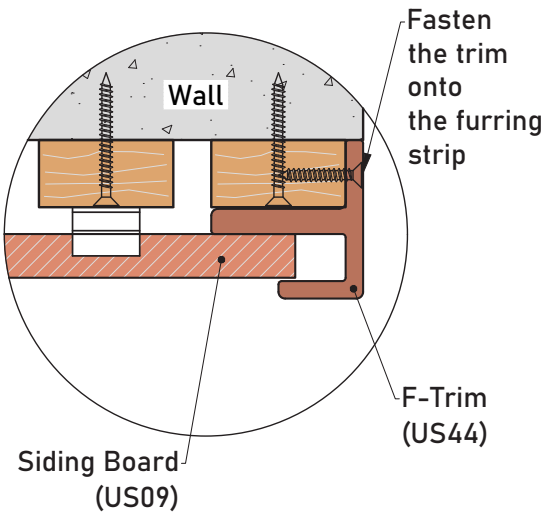


**Detail 47-1**

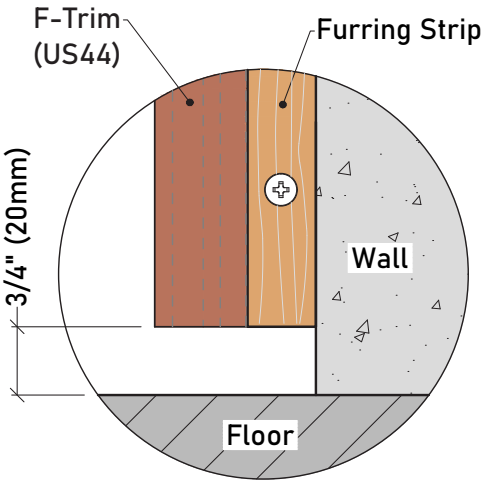


**Detail 47-2**

44 ***Diagram 48*** presents the final appearance after completing the siding installation.

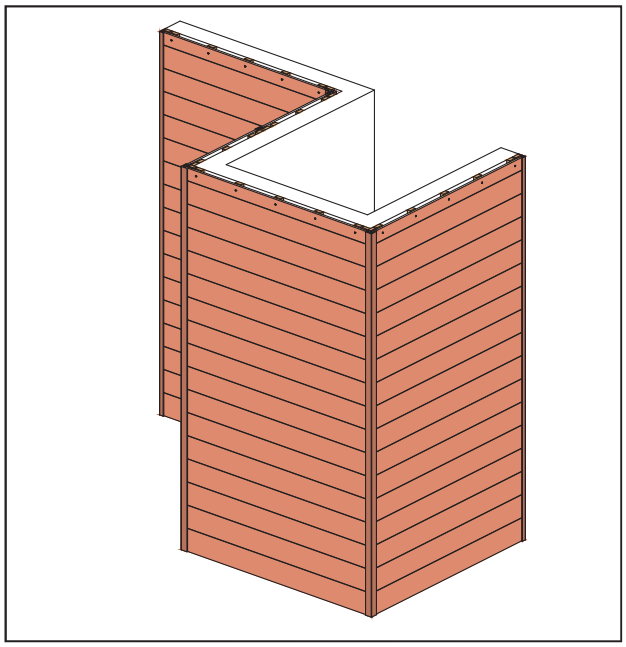

**Diagram 48**

## 45 Finish the Top

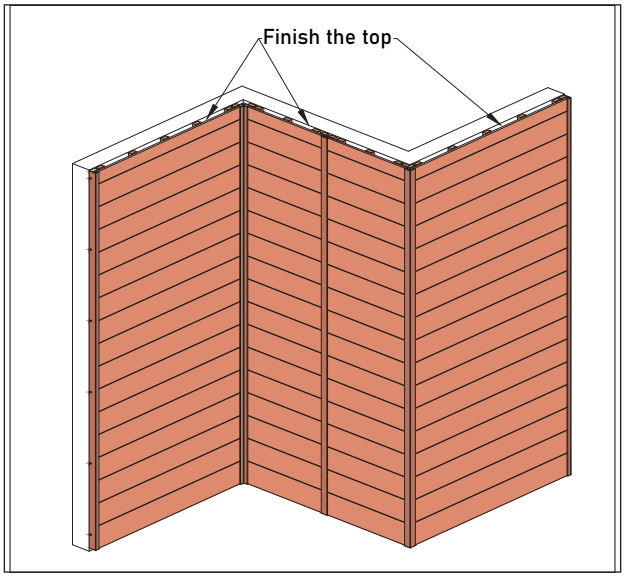


**Diagram 49**

There are three options recommended to finish the top of the siding.

**46 Option 1**

Put the F-Trim (US44) on the board's top edge, as shown in ***Diagram 50***, face fixing the F-Trim (US44) and the board together onto the joist with screws.

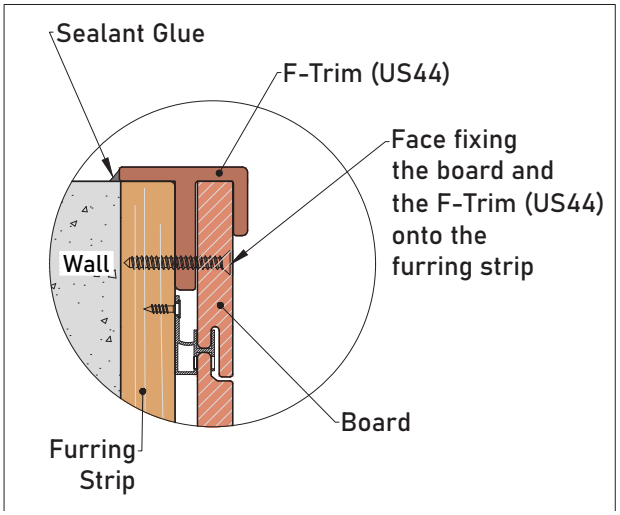


**Diagram 50**

**Note:**
**1. It is no need to use the Rubber Stopper (T-7) to back up the last board.**

**47 Option 2**

Cut the F-trim (US44) to make the centerpiece shorter without interfering with the Rubber Stopper (T-7), as shown in ***Diagram 51***.

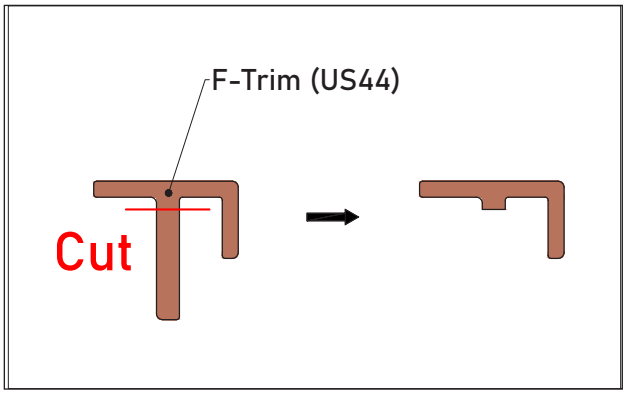


**Diagram 51**

**48** Put the cut F-Trim (US44) in place and secure it onto the joist with screws, as shown in ***Diagram 52***.

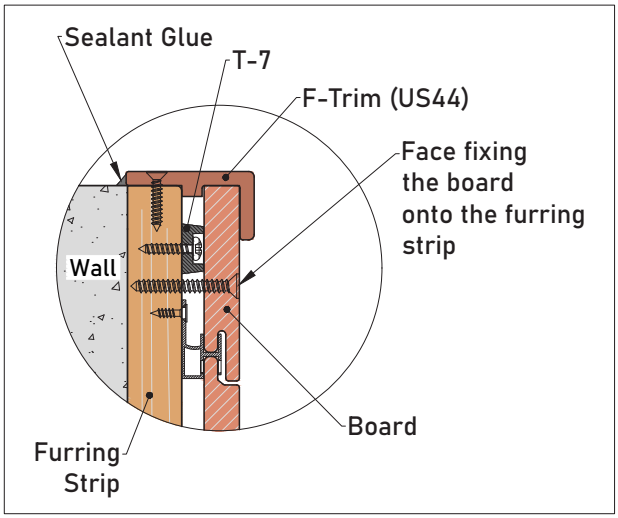


**Diagram 52**

**49** **Option 3**
Put a metal flashing over the siding top and fix it onto the joist with screws, as shown in ***Diagram 53***.

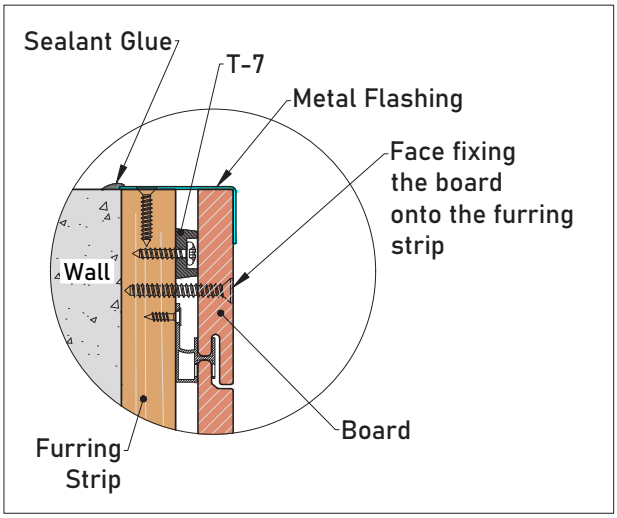


**Diagram 53**



# All Weather Siding
# Horizontal Installation Guide

v20210705US

©2021 Newtechwood Corporation.
NewTechWood® is a registered trademark of Newtechwood Corporation.
To obtain a copy of the most current version of this installation guide, visit us online at www.newtechwood.com.

NewTechWood®



# All Weather Siding
# Vertical Installation Guide

v12 US

NewTechWood®

# CONTENTS


| | |
|---|---|
| **Important Note** | **3 - 5** |
| **Siding Parts** | **6 - 8** |
| **Under Construction** | **9** |
| **Furring Strip Installation** | **10** |
| **Expansion and Contraction Values Table** | **11** |
| **Locking the Siding Board** | **12 - 13** |
| **All Weather Siding Vertical Installatioon** | |
| -Summary of the Installation Procedures | **14** |
| - 1# Framing | **15 - 17** |
| - 2# Install the First Siding Board | **18 - 23** |
| - 3# Install the Second Siding Board | **24 - 25** |
| - 4# Install the Last Siding Board | **26 - 30** |
| - 5# Final Appearance after completing the installation | **31** |
| - 6# Butt Joint Installation | **32 - 33** |
| - 7# Finish The Top | **34** |

IMPORTANT NOTE:

# Read All Sections Before You Start

For the most up to date information, please visit our website @ www.newtechwood.com

Prior to installing any composite siding system, it is recommended that you check with local building codes for any special requirements or restrictions. The diagrams and instructions outlined in this guide are for illustration purposes only and are not meant or implied to replace a licensed professional. Any construction or use of NewTechWood must be in accordance with all local zoning and/or building codes. The consumer assumes all risks and liability associated with the construction and use of this product.

## Safety

When dealing with any type of construction project, it is necessary to wear appropriate safety equipment to avoid any risk of injuries. NewTechWood recommends, but is not limited to the following safety equipment, when handling, cutting, and installing NewTechWood: gloves, a respiratory protection, long sleeves, pants, and safety glasses.

## Tools

Standard woodworking tools may be used. It is recommended that all blades have a carbide tip. Standard stainless steel or acceptable coated deck screws and nails are recommended.

## Environment

A clean, smooth, flat, and strong surface is needed to install NewTechWood's products correctly. Please check with local building codes before ever installing any type of siding. If installation does not occur immediately, NewTechWood's products need to be put on a flat surface at all times. It should NEVER be put on a surface that is NOT flat.

## Planning

Plan a layout for your siding before starting it to ensure the best possible looking siding for your project. Building codes and zoning ordinances generally apply to permanent structures, meaning anything that is anchored to the ground or attached to the house. So nearly every kind of siding requires permits and inspections from a local building department. We recommend drawing out a site plan of your proposed project that you intend to do to minimize errors and make your perfect Siding.

**Pressure wash on a scrap piece of material before using a pressure washer on the deck to make sure that your settings will not damage the Ultrashield coating.**

## Construction

NewTechWood UltraShield is NOT intended for use as columns, support posts, beams, joist stringers, support against a force, or other primary load-bearing members. NewTechWood must be supported by a code-compliant substructure. While NewTechWood products are great for retrofits, NewTechWood's products CANNOT be installed on existing siding boards.

## Ventilation

NewTechWood products CAN be directly installed onto a flat surface. If the wall is uneven, it is essential to build a furring strips framing for the siding installation.

## Heat and Fire

Excessive heat on the surface of NewTechWood products from external sources such as but not limited to fire or reflection of sunlight from energy efficient window products. Low-emissivity (Low-E) glass can potentially harm NewTechWood products. Low-E glass is designed to prevent passive heat gain within a structure and can cause unusual heat build-up on exterior surfaces. This extreme elevation of surface temperatures, which exceeds that of normal exposure, can possibly cause NewTechWood products to melt, sag, warp, discolor, increase expansion/contraction, and accelerate weathering.

Current or potential NewTechWood customers that have concerns about possible damage by Low-E glass should contact the manufacturer of the product, which contains Low-E glass for a solution to reduce or eliminate the effects of reflected sunlight.

## Fasteners

When fastening NewTechWood's products all screws that are face fastened should always be driven in at a 90 degree angle to the siding surface. Toe nailing/screwing should never be done to the products. An extra furring strip should be added if a 90 degree angle cannot be driven into the board. All fasteners should be on their own independent furring strips, when two boards ends meet each other there must be a sister joist. The end of each board must sit on its own furring strip.

Use white chalk, straight boards, or string lines as templates for straight lines. NEVER USE COLORED CHALK. Colored chalk will permanently stain NewTechWood's products and are highly not recommended.

All screws that are face fixed should always be stainless steel. Depending on the screws that you use when face fixing, there could be potential bulging or mushrooming. It is recommended to take care of these mushrooms/bulges by taking a rubber mallet and patting them down to give your siding a better look.

When choosing which screws to use, always check first with your local home centers and hardware stores to see if they have screws that are engineered specifically for composite wood. These screws will always work and give NewTechWood's products the best looking outcome, using other screws that are not recommended for composite could potentially damage/harm the siding. If you are unsure which screw to use, contact your manufacturer for more information.

## Predrill

It is recommended to use the #8 pan head screw for face fixing the boards and the trims onto the furring strip. When face fixing, it is recommended to predrill a slightly bigger hole on the board and the trim to allow for expansion and contraction, as shown in below diagram,

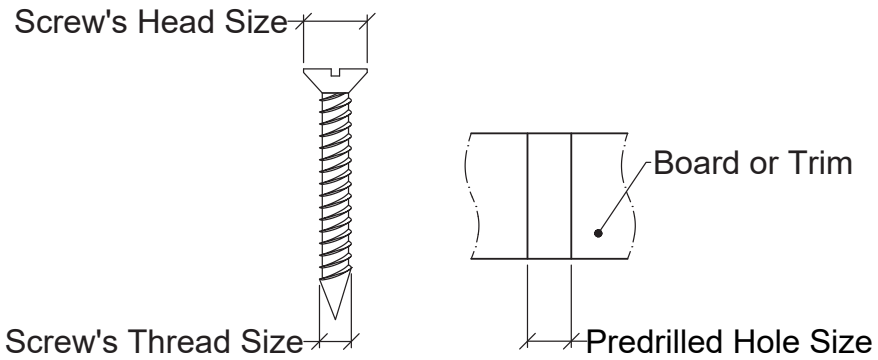


The predrilled hole size should be larger than the screw thread size, from 1/16" (1.5 mm) to 5 /64" (2 mm). Moreover, the predrilled hole size should also be smaller than the screw head size, at least 5/64" (2 mm). A washer can be applied if the predrilled hole size is smaller than the screw head size below 5/64" (2 mm).

# Siding Parts

| Product | Purpose | Part |
|---|---|---|
| AW-08 | Used at every joist to fix each board to the furring strip |  |
| T-7 | Used on the last Siding board |  |
| US09 | Siding Board (can be used in place of US30, US31) | 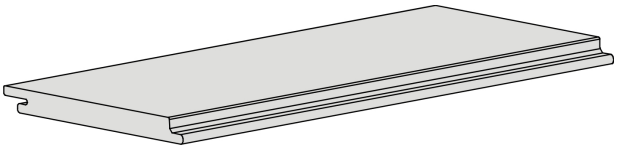 |
| US44 | F-Trim, used on the outermost edges | 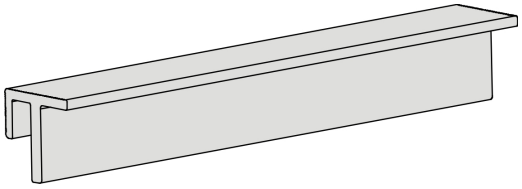 |
| US46 | Outside Corner Trim, used on the outside corners | 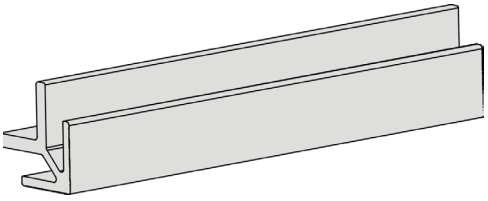 |
| US47 | Inside Corner Trim, used on the inside corners | 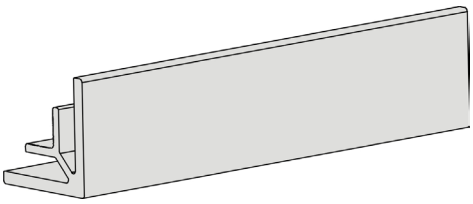 |

# Siding Screws
# (For Wood Furring Strip)

**The table below shows the screws recommended to use for the installation, but not included.**

| Product | Appication | Part |
|---|---|---|
| #6 x 1 1/4" Stainless Steel SS304 (Bugle Head) | Used when locking the board into the Clip (AW08) | 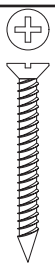 |
| #8 x 3" Stainless Steel SS304 **depends on the thickness of your furring strips (Bugle Head) | Used when installing the furring strips onto the wall |  |
| #8 x 1" Stainless Steel SS304 (Bugle Head) | Used when installing the Clip (AW08) onto the wood furring strips | 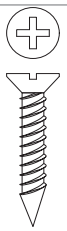 |
| #8 x 1 1/4" Stainless Steel SS304 (Bugle Head) | Use when face fixing the boards and the trims onto the wood furring strips | 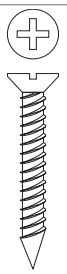 |
| #8 x 1-1/4" Stainless Steel SS304 (Pan Head) | Used when installing the Rubber Stopper (T-7) onto the wood furring strips | 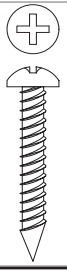 |

# Siding Screws
# (For Aluminum Furring Strip)

**The table below shows the screws recommended to use for the installation, but not included.**

| Product | Application | Part |
|---|---|---|
| #6 x 1 1/4" Stainless Steel SS304 (Bugle Head Self Tapping) | Used when locking the board into the Clip (AW08) |  |
| #8 x 3" Stainless Steel SS304 **depends on the thickness of your furring Strips (Bugle Head Self Tapping) | Used when installing the furring strips onto the wall | 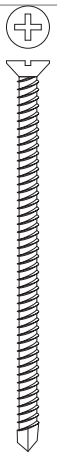 |
| #8 x 1" Stainless Steel SS410 (Bugle Head Self Tapping) | Used when installing the Clip (AW08) onto the aluminum furring strips | 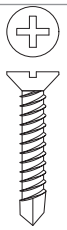 |
| #8 x 1 1/4" Stainless Steel SS410 (Bugle Head Self Tapping) | Use when face fixing the boards and the trims onto the aluminum furring strips | 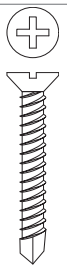 |
| #8 x 1-1/4" Stainless Steel SS304 (Pan Head Self Tapping) | Used when installing the Rubber Stopper (T-7) onto the aluminum furring strips | 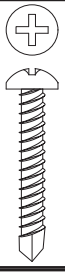 |

*Note: All screws are based on our recommendation and if the installation requires something different than what is shown, a professional should be consulted before installing.
The following installation guide will use the above screw sizes.

## Under Construction

We recommend for the under construction aluminum or pressure treated wood furring strips. Each siding board needs to be supported by a furring strip NO MORE than 12" (305mm) from center to center. Extra care is required in order to provide sufficient joisting in and around obstacles such as windows, fascia's, soffits, guttering, ventilation points etc. Below is an example of the layers that would occur in a typical installation, but a licensed professional should always be consulted prior to any installation.

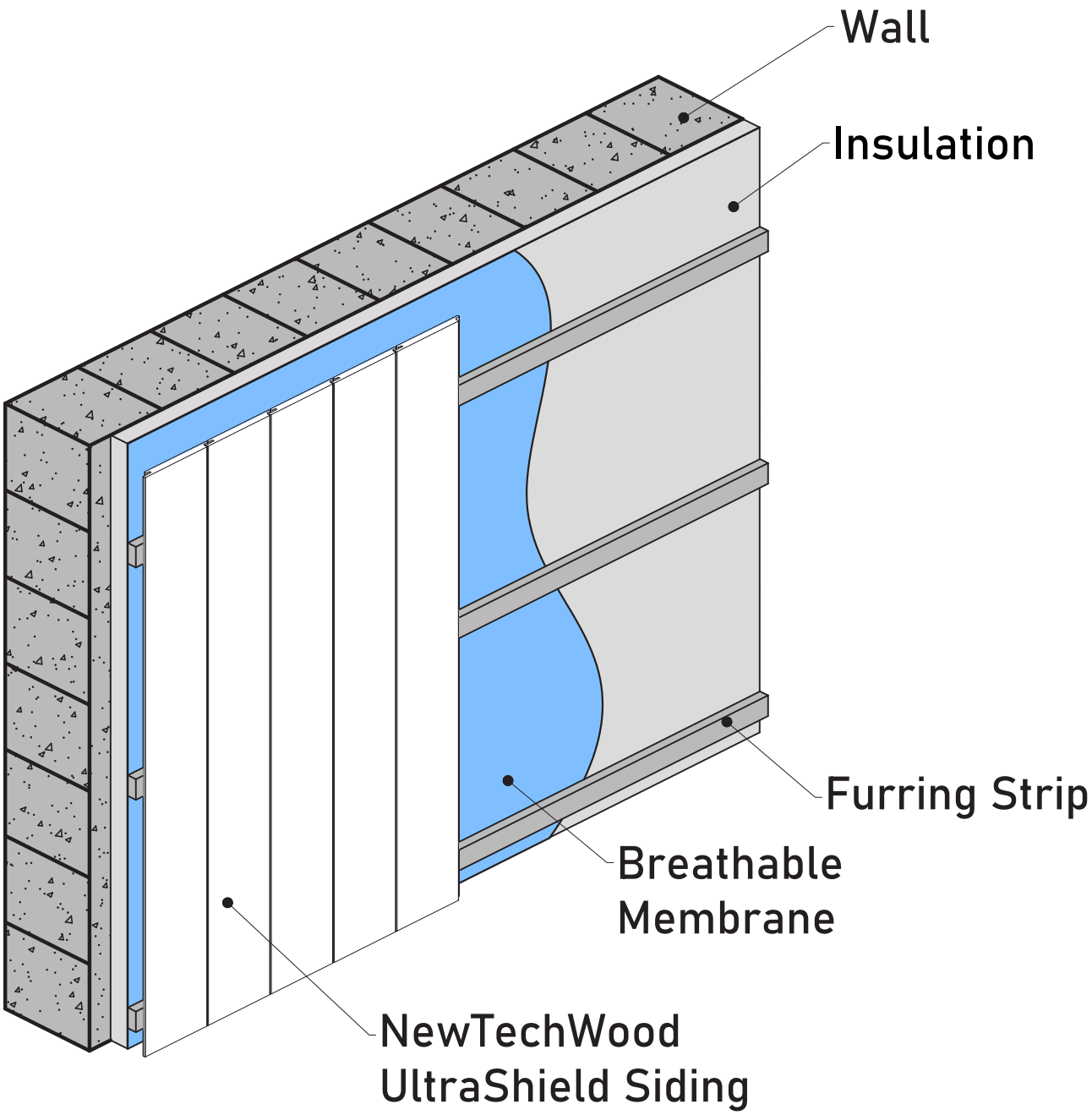

# Furring Strips Installation

A building professional should be consulted regarding vapor barriers and insulation for your project. Where a vapor barrier is to be used, it should be a breathable type and must be positioned behind the furring strips. The furring strips needs to have a minimum thickness of nominal 1" (25mm).

Wood furring strips should be fixed into position at a maximum of 12" (305mm) centers using a suitable #8 Stainless Steel Countersunk Wood/Masonry screw. All furring strips must be flat and leveled against the wall surface use shims if necessary.

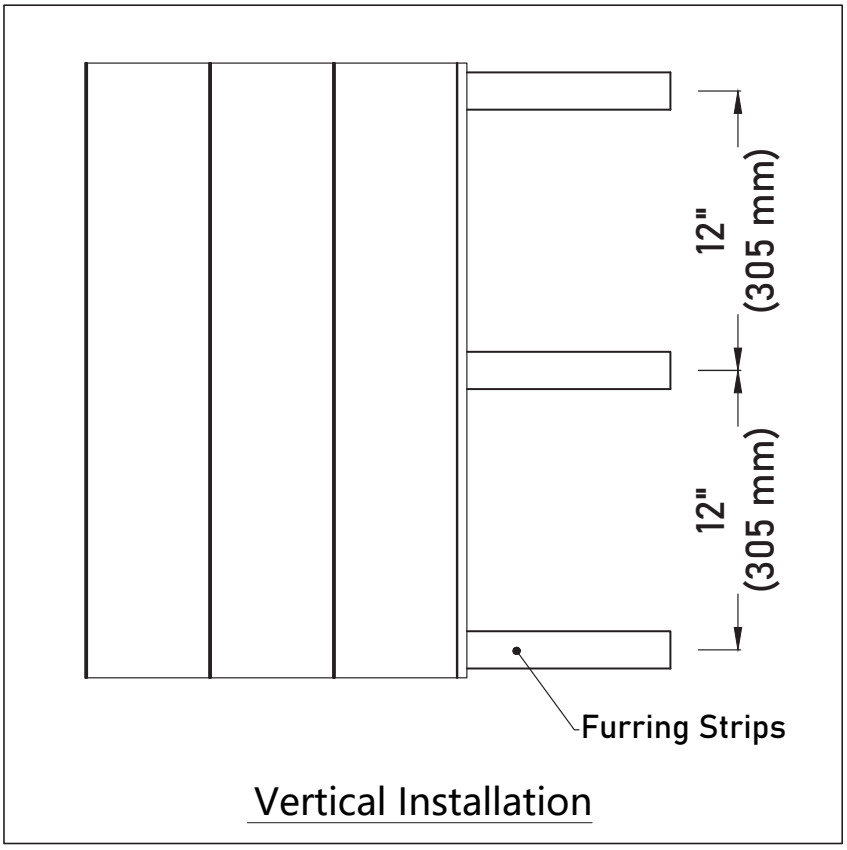


Vertical Installation

# Expansion and Contraction Values

NewTechWood siding boards will experience expansion and contraction with changes in temperature. Expansion and contraction are most significant where extreme temperature changes occur. Fastening the deck planks according to the gapping requirements noted in the following table accommodates for this movement.

## Expansion and Contraction table of values for North America, Canada, Australia and Asia

Length (Feet)

| Installation Temperature (Farhenheit) | 3 | 8 | 9 | 10 | 12 | 13 | 16 | 18 | Gap (in) |
|---|---|---|---|---|---|---|---|---|---|
| **32** | 1/16 | 1/8 | 1/8 | 3/16 | 3/16 | 1/4 | 1/4 | 5/16 | |
| **41** | 1/16 | 1/8 | 1/8 | 1/8 | 3/16 | 3/16 | 1/4 | 1/4 | |
| **50** | 1/16 | 1/8 | 1/8 | 1/8 | 1/8 | 3/16 | 3/16 | 3/16 | |
| **59** | 1/16 | 1/16 | 1/16 | 1/8 | 1/8 | 1/8 | 1/8 | 3/16 | |
| **68** | 3/64 | 1/16 | 1/16 | 1/16 | 1/16 | 1/8 | 1/8 | 1/8 | |
| **77** | 3/64 | 1/16 | 1/16 | 1/16 | 1/16 | 1/16 | 1/16 | 1/16 | |
| **86** | 3/64 | 3/64 | 3/64 | 3/64 | 3/64 | 1/16 | 1/16 | 1/16 | |

Note: If you are still unsure of what gapping to use, contact the manufacturer and they will give you the correct gapping requirements based on your environment and area.

# Locking the Siding Board

Since the composite wood must allow for expansion and contraction due to temperature change, the board must be locked at one fixed point but only one point to allow the remaining board to expand and contract freely. In the case there is a need to lock the board, Clip (AW08) comes with a separate hole.

**It is important that DO NOT LOCK any other clips for the same board.**

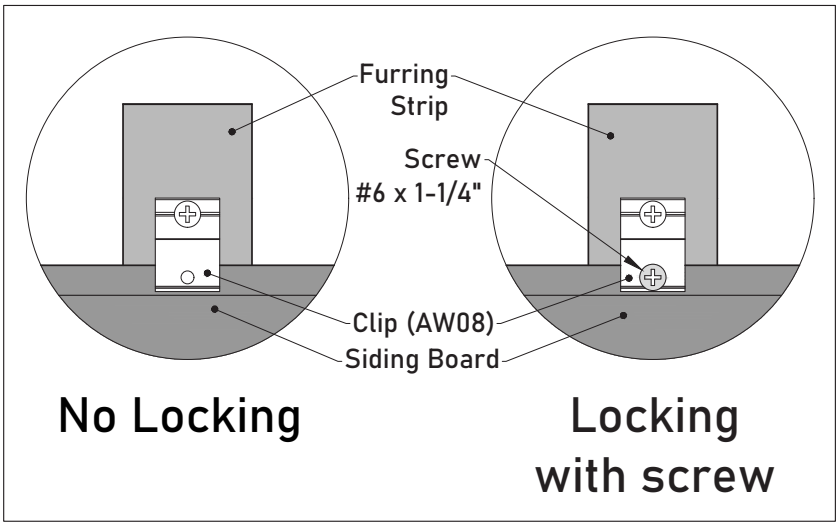


- Vertical Installation -

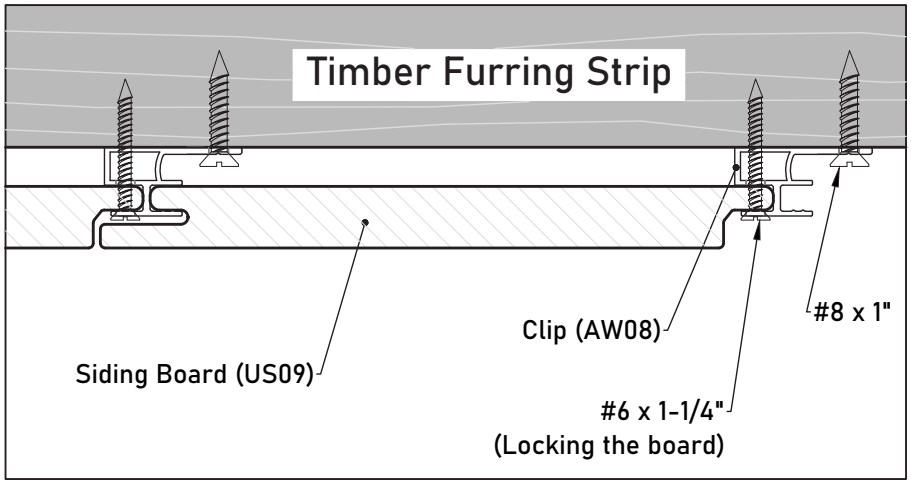


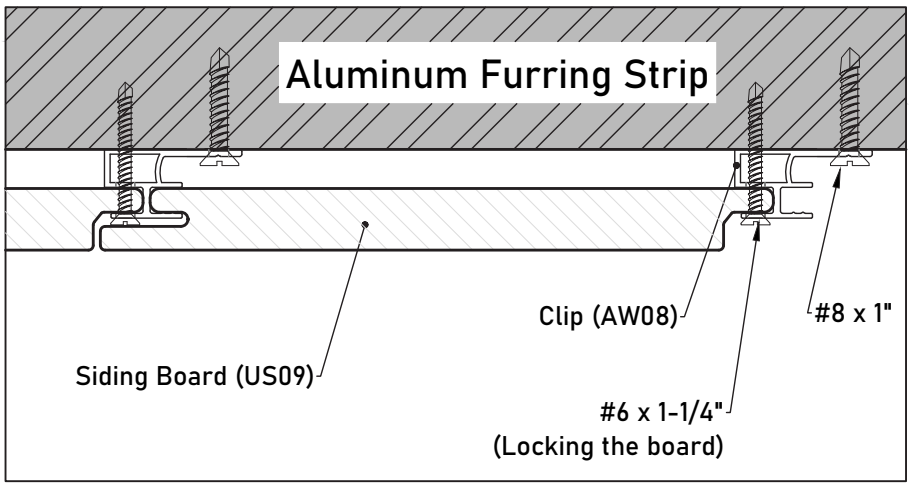

When installing vertically, it is required to lock the Clip (AW08) at the bottom of the board, as shown in **Diagram A1** and **Diagram A2**.

Note:

1. When the board's length is below 78 3/4" (2m), it is only to lock the first clip (AW08) at the bottom of the board, as shown in **Diagram A1**.
2. When the board's length is equal to or longer than 78 3/4" (2m), it is required to lock the first and second clip (AW08) counted from the bottom of the board, as shown in **Diagram A2**.

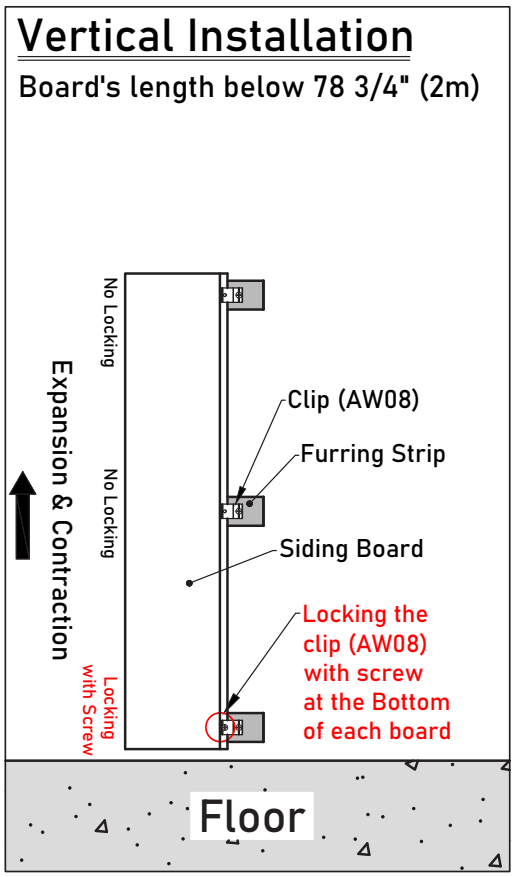


Diagram A1

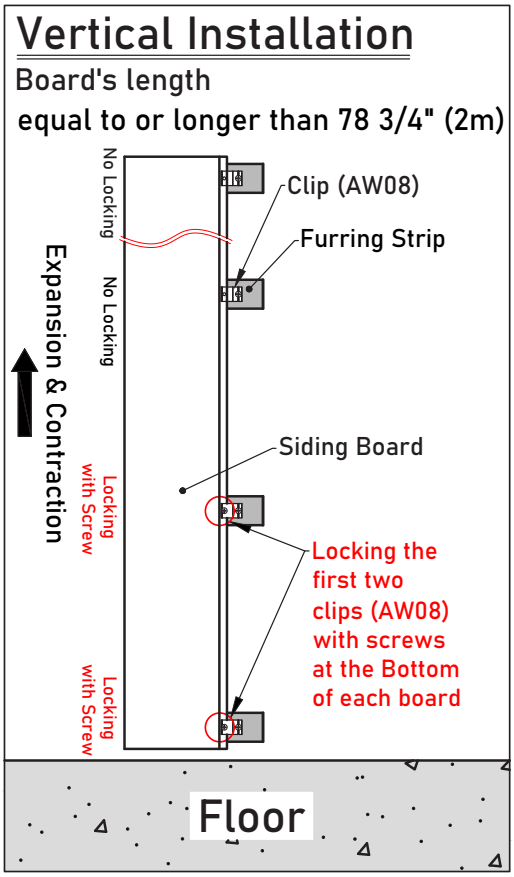


Diagram A2

**Please Note:**

Use an aluminum angle or equivalent at the bottom of the siding is a must to hold the boards when installing vertically, as shown in the diagram below.

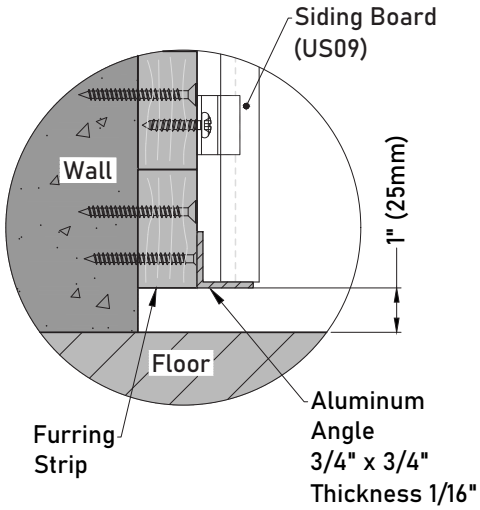

# All Weather Siding - Vertical Installation

## Installation Procedures

Step 1: Framing
- Measure and Chalk the Furring Strips
- Furring Strips Installation

Step 2: Installing the Trim on the First starting point

Step 3: All Weather Siding Board Installation
- Install the first siding board
- Use the Box Beam Level to check the first siding board to ensure it is plumb

Step 4: Continuing the remaining installation for the entrie wall

Step 5: Install the last siding board

Step 6: Finish the installation work for all the walls

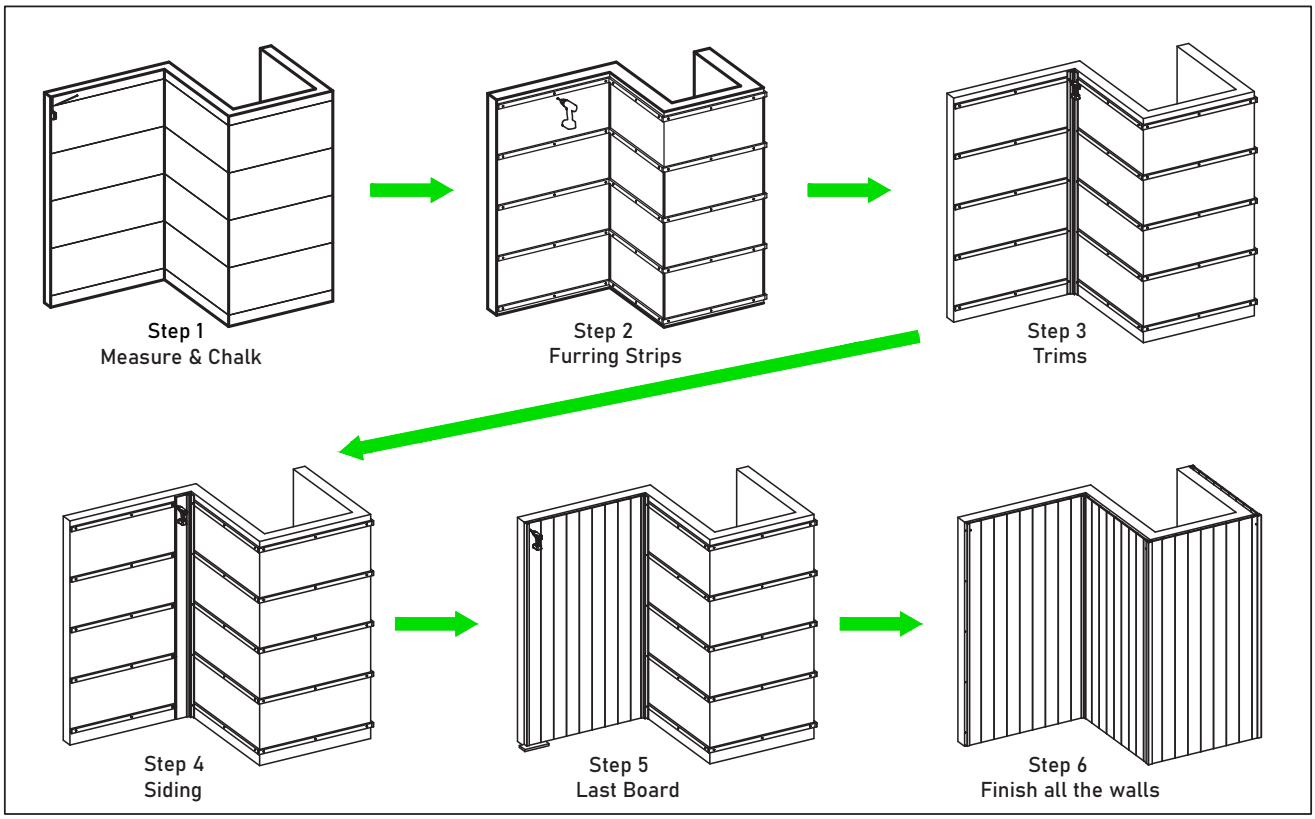

# 1 Framing

The frame needs to be level before installing the siding boards. **Diagram 1** shows the wall replicating different scenarios potentially occuring when installing the siding boards.

Wall Side A: Presented from the Outermost Edge to the Inside Corner
Use the F-Trim (US44) for the Outermost Edge trimming and Inside Corner Trim (US47) for the inside corner.

Wall Side B: Presented from the Inside Corner to the Outside Corner.
Use the Inside Corner Trim (US47) for the Inside Corner and use the Outside Corner Trim (US46) for the outside corner trimming.

Wall Side C: Presented between two Outside Corners.
Use the Outside Corner Trim (US46) for the outside corner trimming.

Wall Side D: Presented from the Outside Corner to the Outermost Edge.
Use the Outside Corner Trim (US46) for the Outside Corner Trimming and the F-Trim (US44) for the outermost edge trimming.

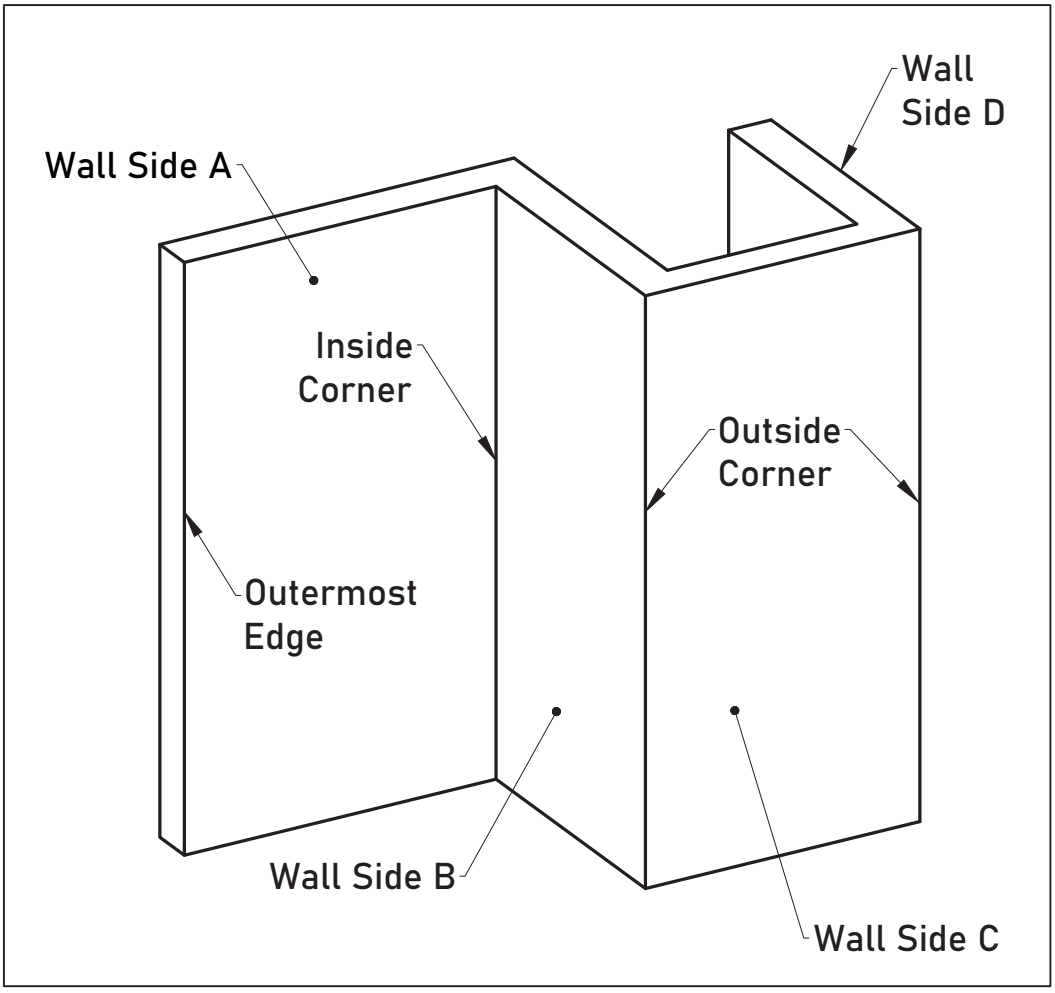


Diagram 1

1.1 Measure and chalk the Furring Strip according to the span data specified on **page 10** of this installation guide, as shown in **Diagram 1.1**.

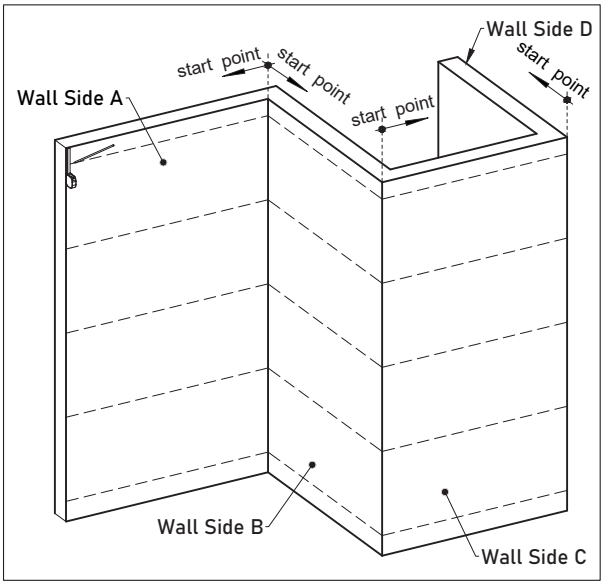


Diagram 1.1

Please Note:

1. We are using Timber Furring Strips for this installation illustration. If you are using the aluminium furring strip, please refer to page 7 of this installation guide for the correct recommended screws.

2. An adequate span between the furring strips is required to keep the siding boards from bending. Please review page 10 of this installation guide to see what span is needed.

1.2 Use the screws to fix the furring strips onto the wall in the distance at least 19-11/16" (500 mm) and max to 39-3/8" (1000 mm), as shown in **Diagram 1.2A** and **Diagram 1.2B** for the butt joint installation.

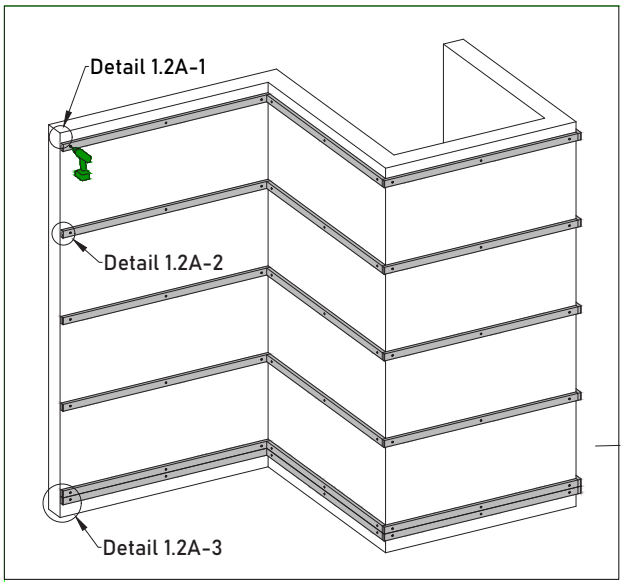


Diagram 1.2A

Please Note:
1. A minimum gap of 3/8" (10mm) needs to be left between the upper first furring strip and ceiling, as shown in Detail 1.2A-1.

2. It is recommended to leave a gap from min 3/16" (5mm) and max to 1/4" (7mm) between the wall's outermost edge and the furring strips, as shown in Detail 1.2A-2.

3. A minimum gap of 1" (25mm) must be left between the lowest furring strip and the floor except for the area where flooding rises above the flooding line, as shown in Detail 1.2A-3.

## 1.2 continued

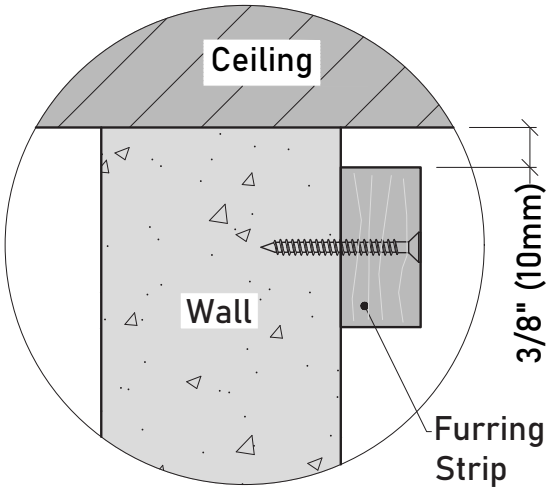


Detail 1.2A-1

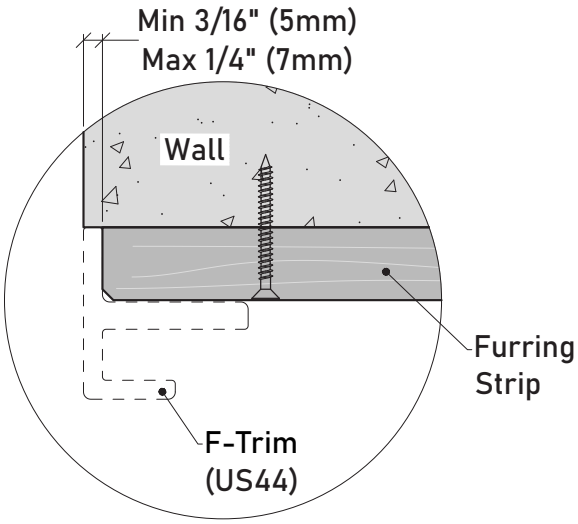


Detail 1.2A-2

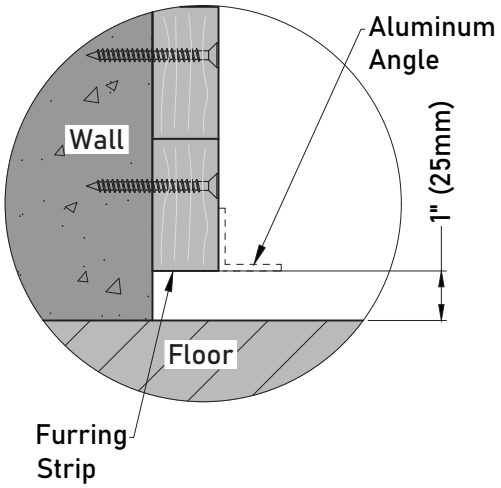


Detail 1.2A-3

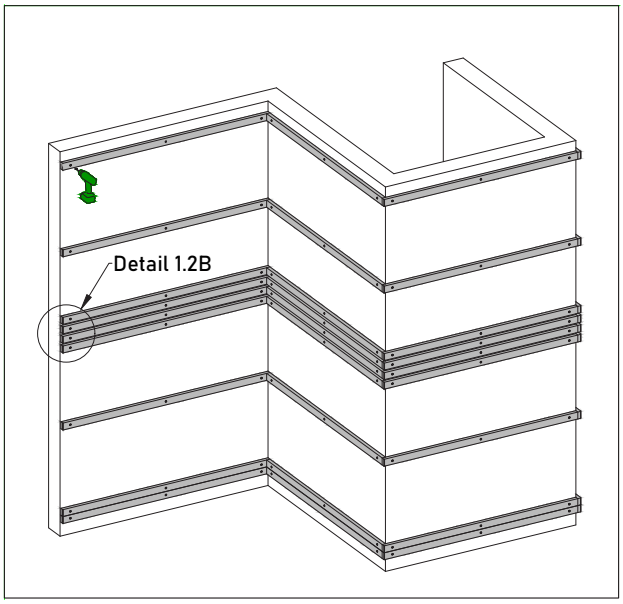


Diagram 1.2B

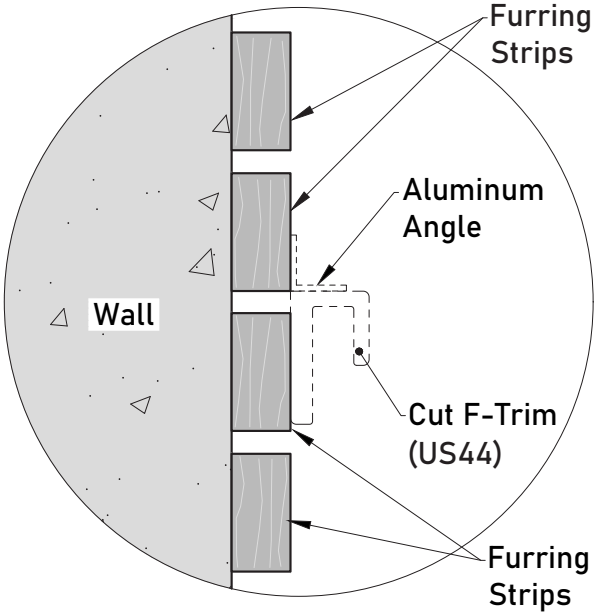


Detail 1.2B

# 2 Install the First Siding Board

**2.0** Start the siding board installation from the starting points, as shown in **Diagram 2.0A.**

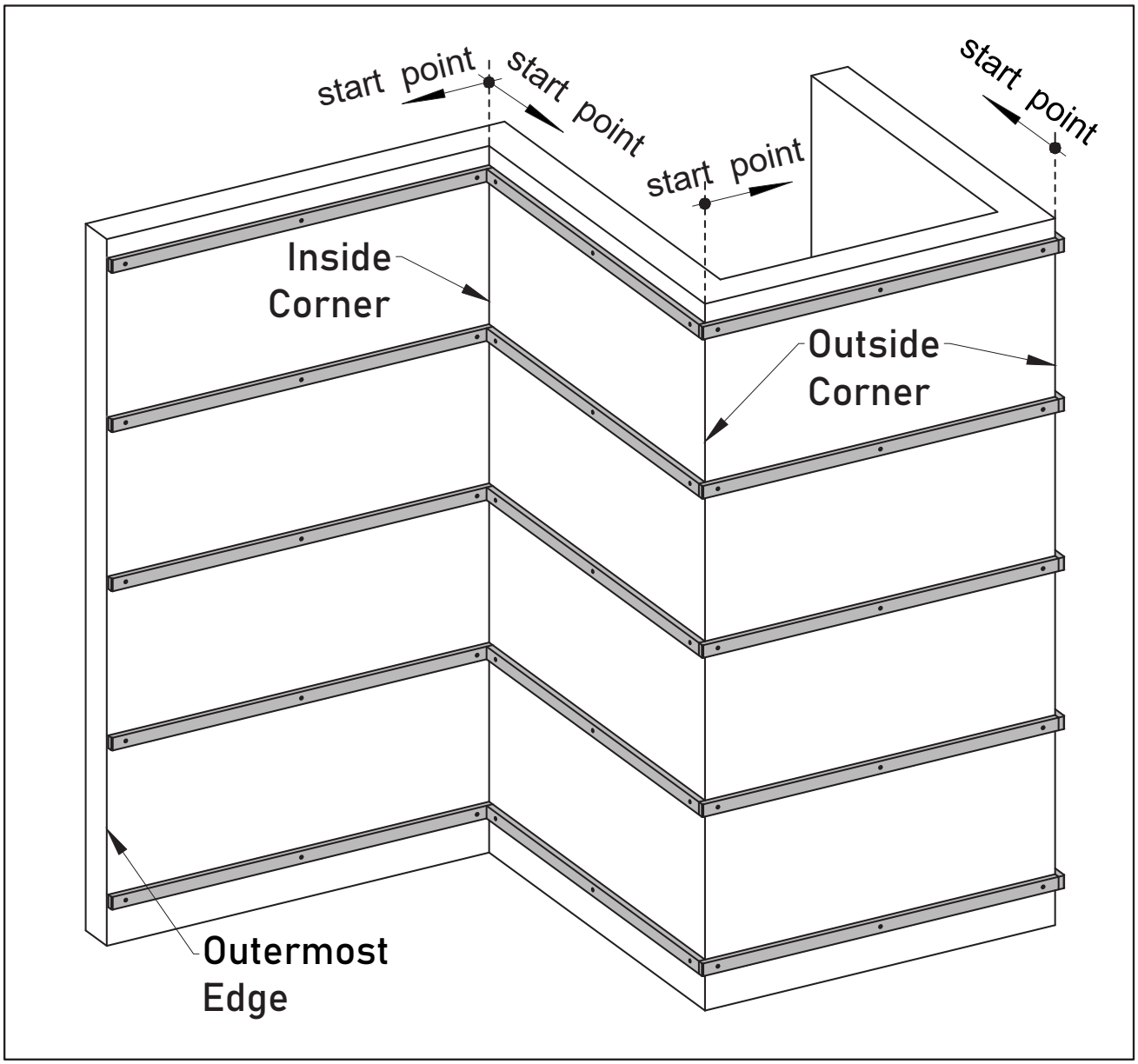


Diagram 2.0A

## 2.0 continued

**Please Note:**
**1. A minimum space of 1" (25mm) must be left between the bottom of the trims and the floor, as shown in Detail 2.0B-1.**

**2. A minimum space of 1" (25mm) must be left between the bottom of the siding boards and the floor, as shown in Detail 2.0B-2.**

**3. It's except for the area where flooding rises above the flooding line.**

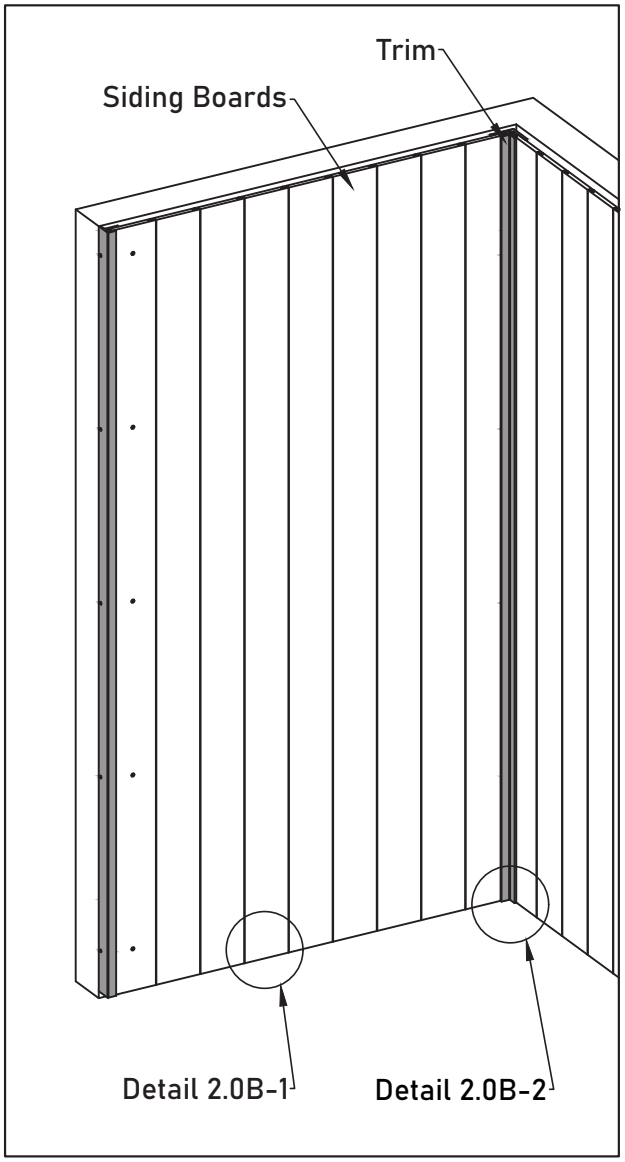


Diagram 2.0B

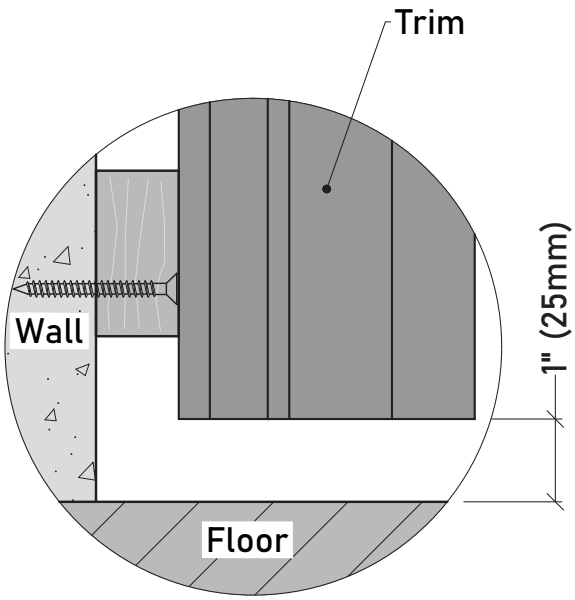


Diagram 2.0B-1

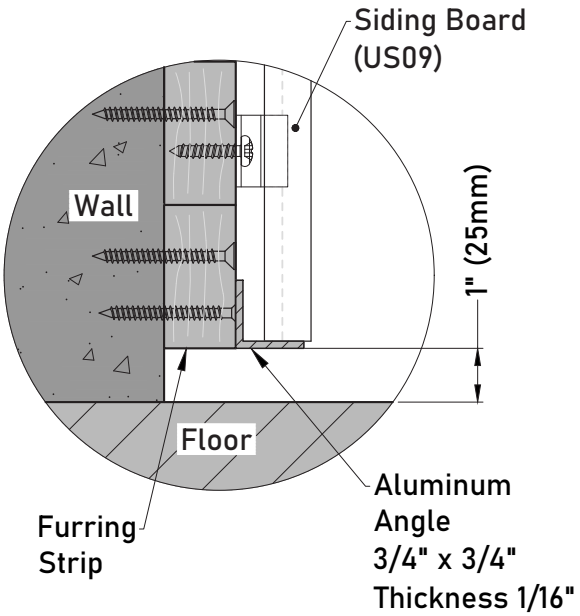


Diagram 2.0B-2

## 2.1A Install the First Siding Board at the Inside Corner toward the Outermost Edge

Fasten the Inside Corner Trim (US47) with screws onto the furring strips. It is recommended to begin the installation from the inside corner, as shown in **Diagram 2.1A** and **Detail 2.1A.**

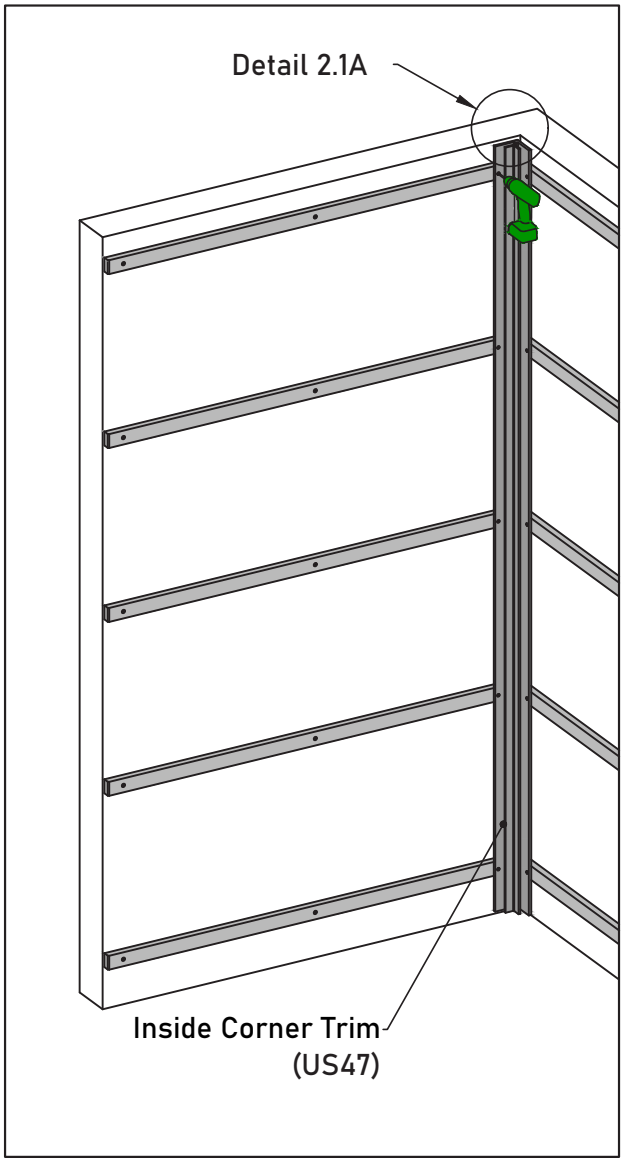


Diagram 2.1A

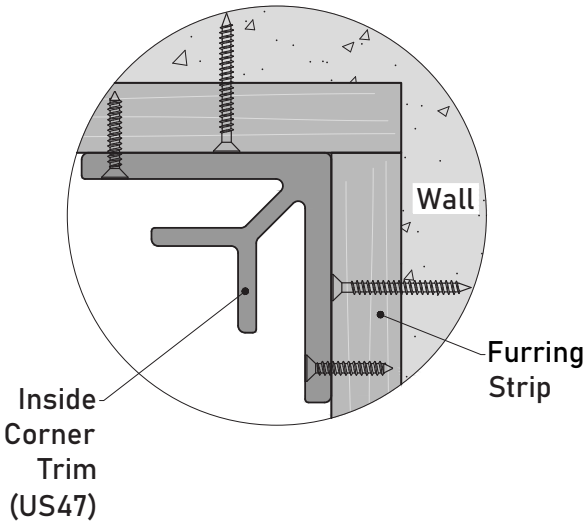


Detail 2.1A

**Please Note:**

**1. Pre-drill the screw holes for the Inside Corner Trim (US47) before fastening with the screws.**

2.1B Insert the first Siding Board (US09) into the Inside Corner Trim (US47) and fasten it to the furring strips using Clip (AW08), as shown in **Diagram 2.1B** and **Detail 2.1B**.

**Please Note:**

**1. Since the composite wood must allow for expansion and contraction due to temperature change, the board must be locked at one fixed point but only one point to allow the remaining board to move freely. When installing vertically, it is required to lock the Clip (AW08) at the bottom of each board, as shown in Diagram 2.1B.**
**DO NOT LOCK any other Clip (AW08) for the same board.**

**Please review page 12, "Locking the Siding Board" for further information.**

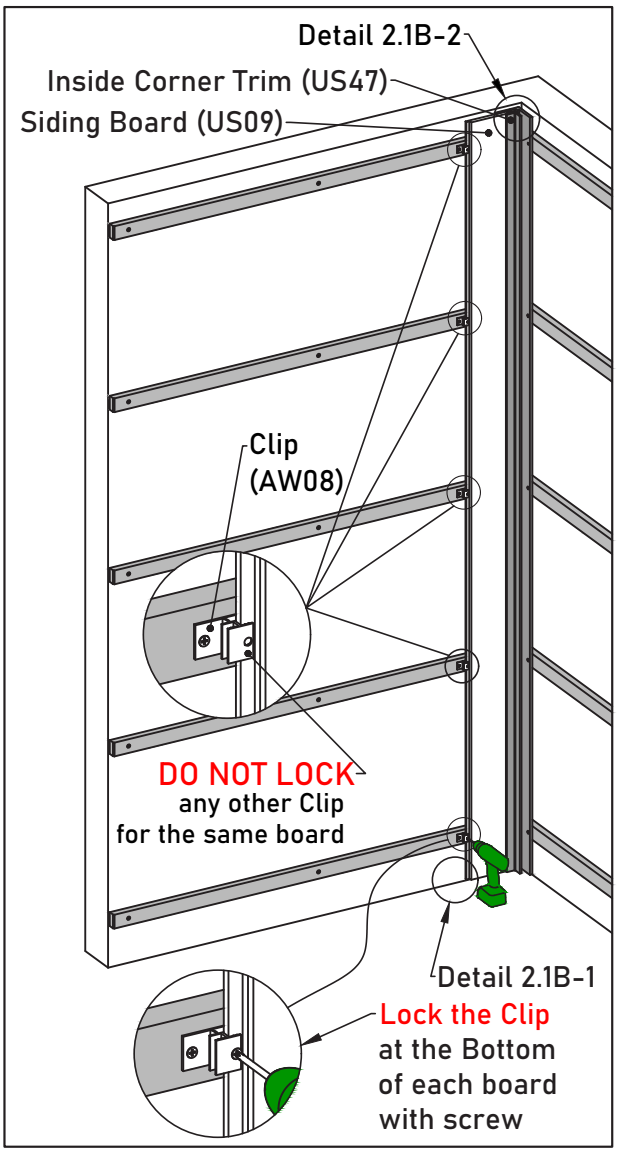


Diagram 2.1B

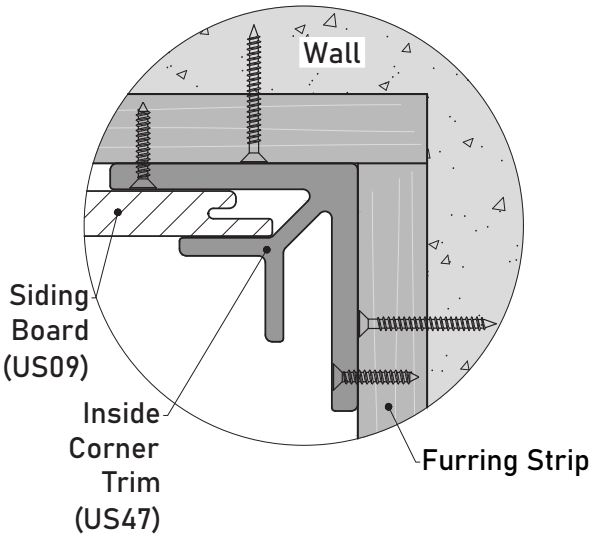


Detail 2.1B

## 2.2 Install the First Siding Board at the Inside Corner toward the Outside Corner

Fasten the Inside Corner Trim (US47) with screws onto the furring strips, same as the **Step 2.1A**. It is recommended to begin the installation from the inside corner.

Insert the first Siding Board (US09) into the Inside Corner Trim (US47) and fasten it to the furring strips using Clip (AW08), and **lock the clip at the bottom of the board,** as shown in **Diagram 2.2** and **Detail 2.2.**

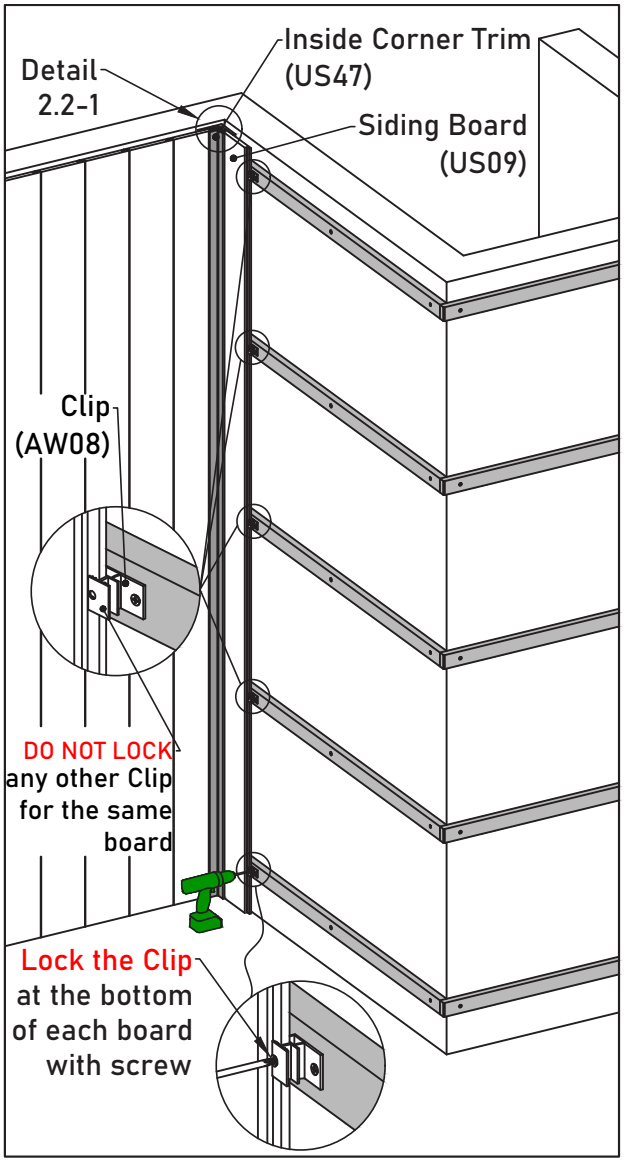


Diagram 2.2

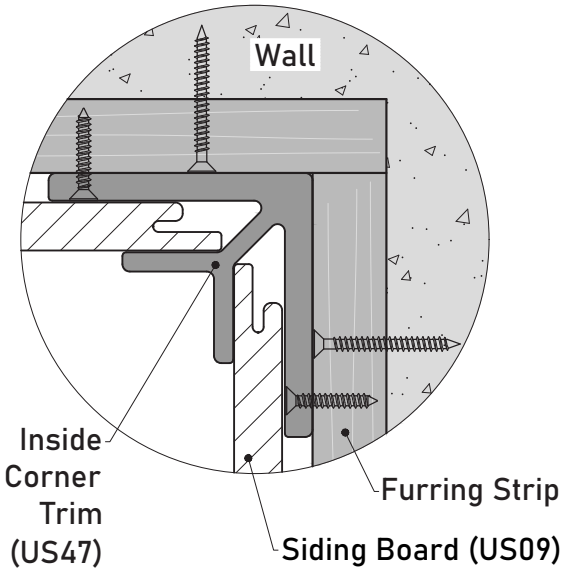


Detail 2.2

## 2.3 Install the First Siding Board at the Outside Corner toward the Opposite Outside Corner or Outermost Edge.

Fasten the Outside Corner Trim (US46) with screws onto the furring strips.

Insert the first Siding Board (US09) into the Outside Corner Trim (US46) and fasten it to the furring strips using Clip (AW08), and **lock the clip at the bottom of the board,** as shown in **Diagram 2.3** and **Detail 2.3.**

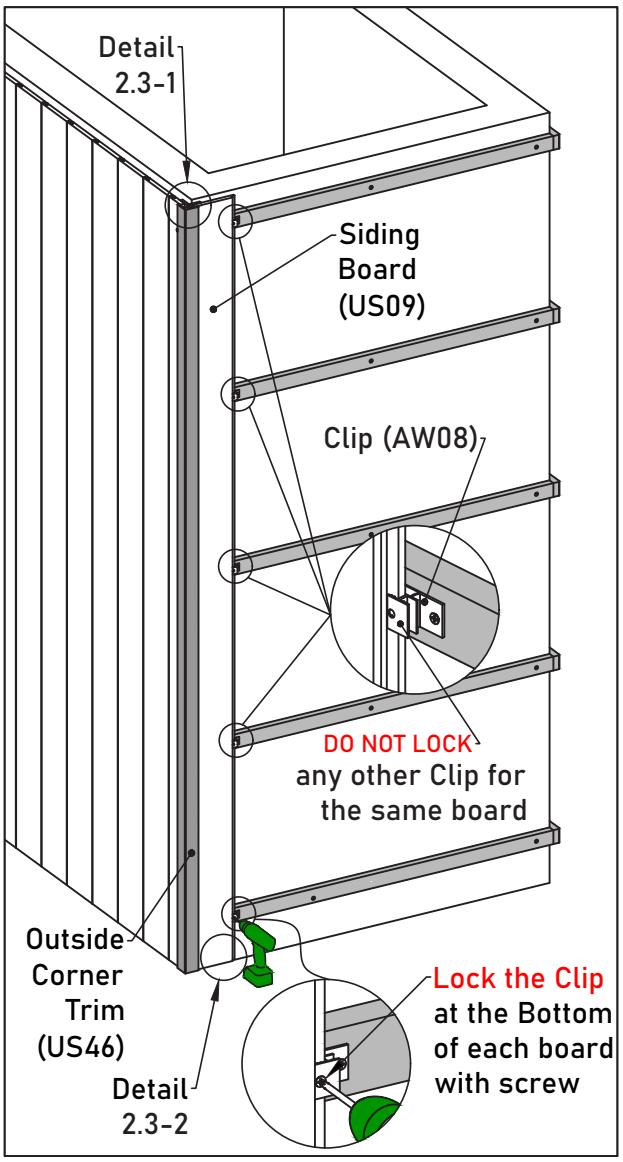


Diagram 2.3

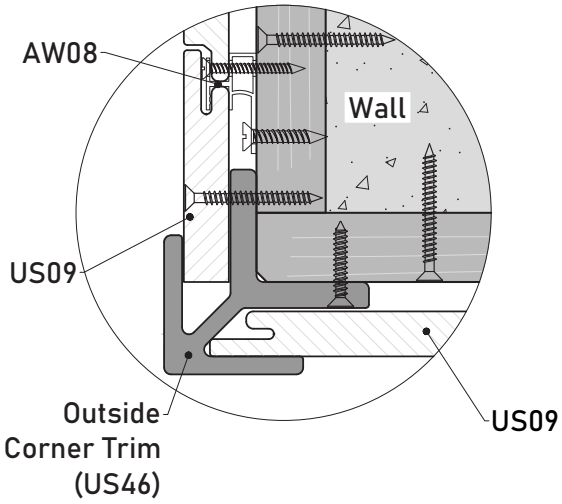


Detail 2.3

# 3 Install the Second Siding Board

## 3.1 Install the Second Siding Board for the Inside Corner Trim (US47)

Put the second Siding Board (US09) in place.
Fasten it onto the furring strip with clip (AW-08), and **lock the clip at the bottom of the board,** as shown in **Diagram 3.1** and **Detail 3.1**.

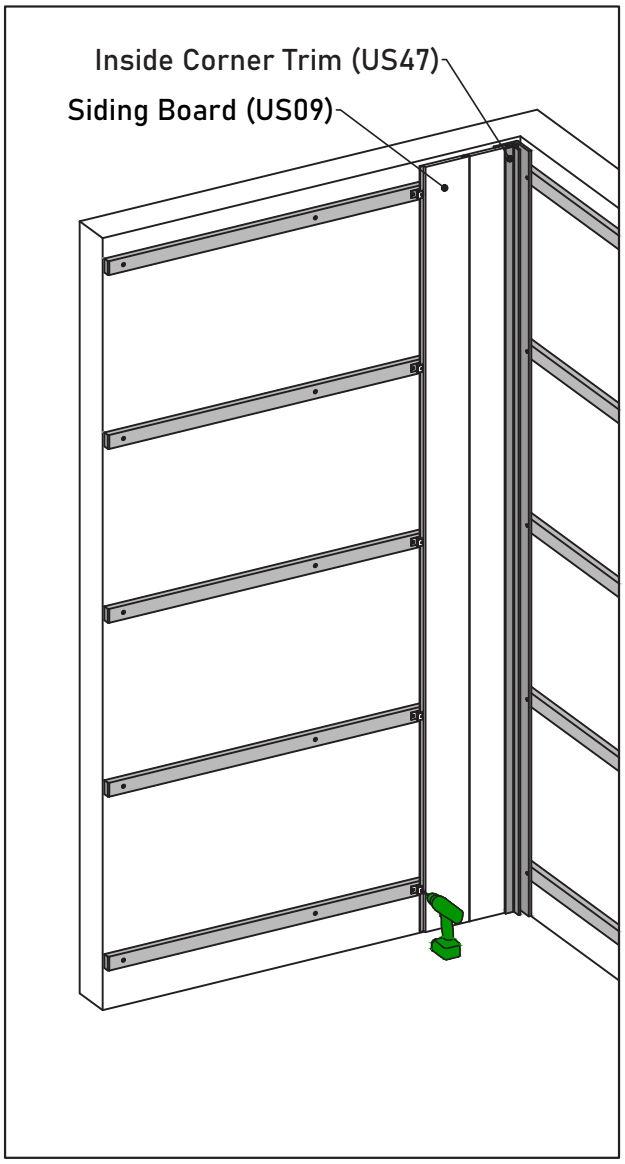


Diagram 3.1

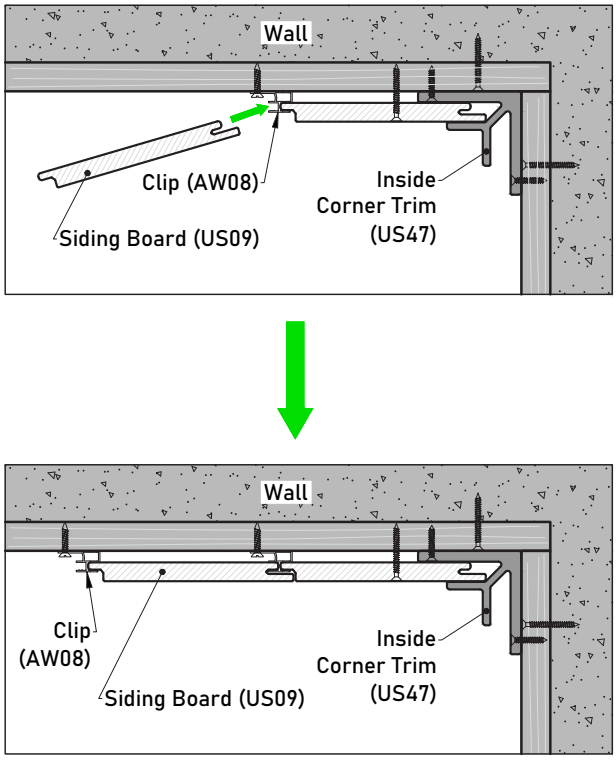


Detail 3.1

## 3.2 Install the Second Siding Board for the Outside Corner Trim (US46)

Put the second Siding Board (US09) in place.
Fasten it onto the furring strip with clip (AW-08), and **lock the clip at the bottom of the board,** as shown in **Diagram 3.2** and **Detail 3.2**.

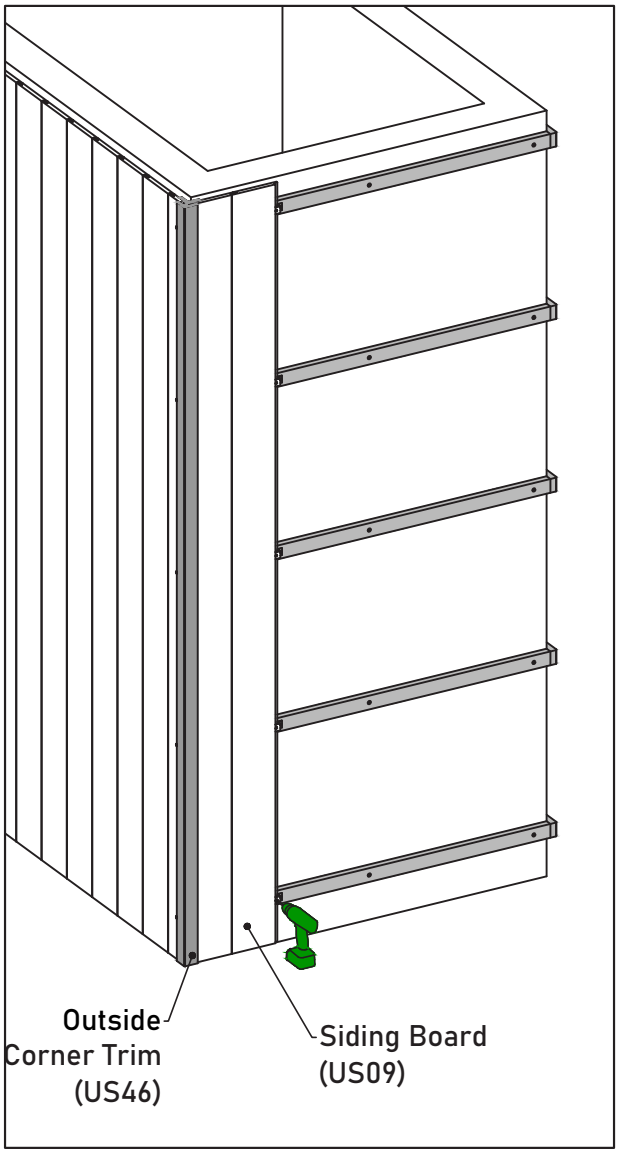


Diagram 3.2

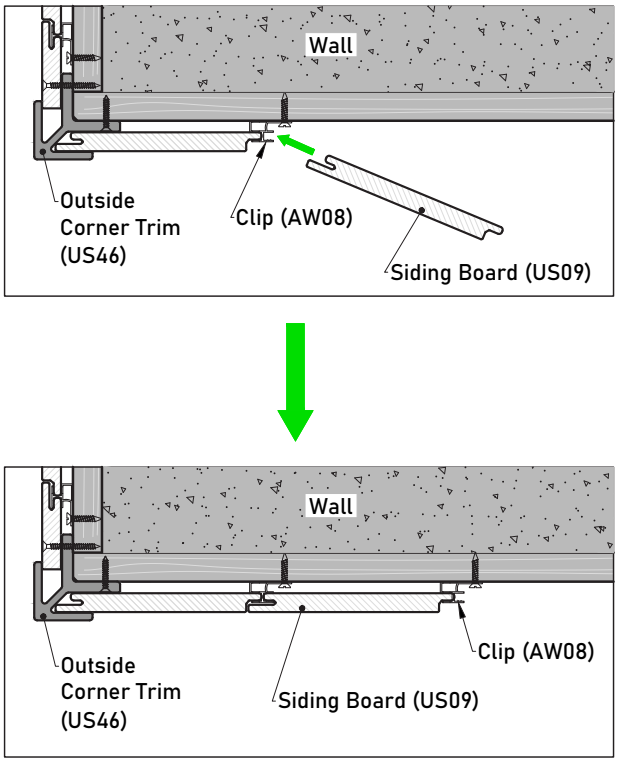


Detail 3.2

# 4 Install the Last Siding Board

## 4.1A Install the Last Siding Board for the Outermost Edge

When you are at the last board at the outermost edge, measure the distance to obtain the appropriate last board's ripping dimension, as shown in **Diagram 4.1A** and **Detail 4.1A**.

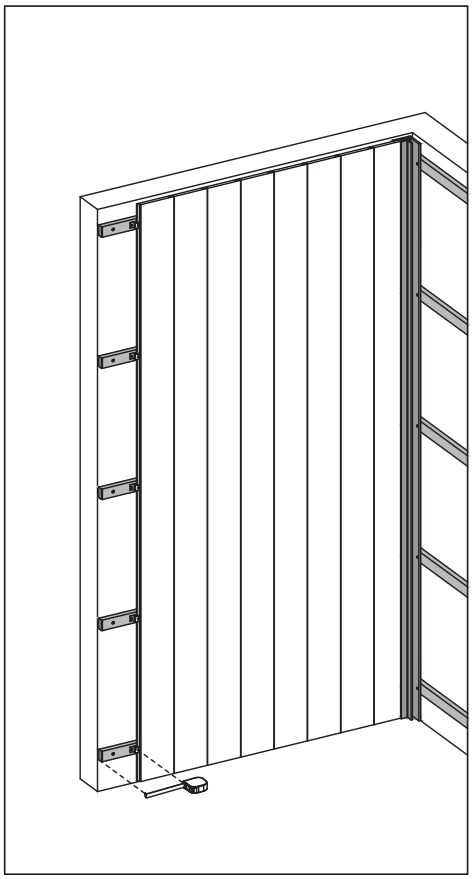

Diagram 4.1A

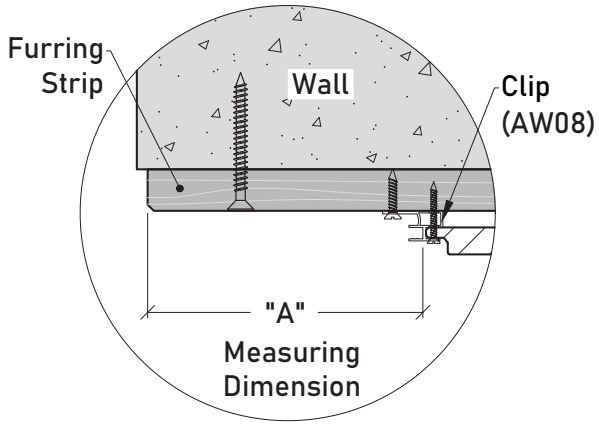


Detail 4.1A

## 4.1B

Rip the board according to the measured dimension, as shown in **Diagram 4.1B** and **Detail 4.1B**.

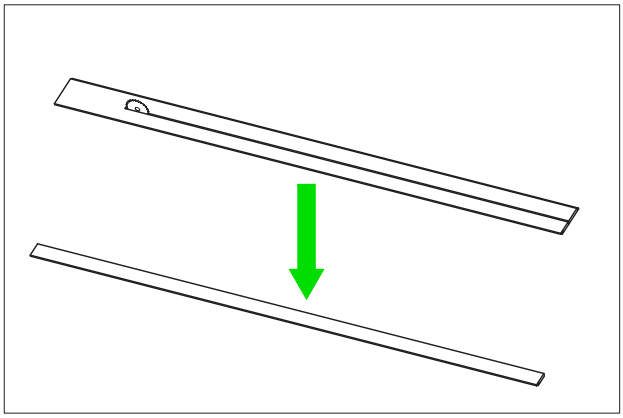

Diagram 4.1B

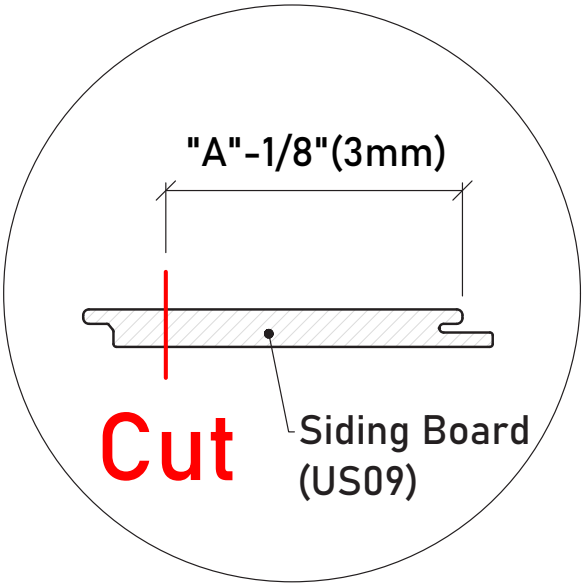


Detail 4.1B

4.1C Put the cut siding board in place, as shown in **Diagram 4.1C** and **Detail 4.1C**.

**Please Note:**

**1. Predrill the screw holes for the cut Siding Board to allow it to expand and contract. Please review page 5, section "Pre-drill" of this installation guide for further information.**
**2. Put a block under the cut Siding Board to keep the board in the same height, as shown in Diagram 4.1C**

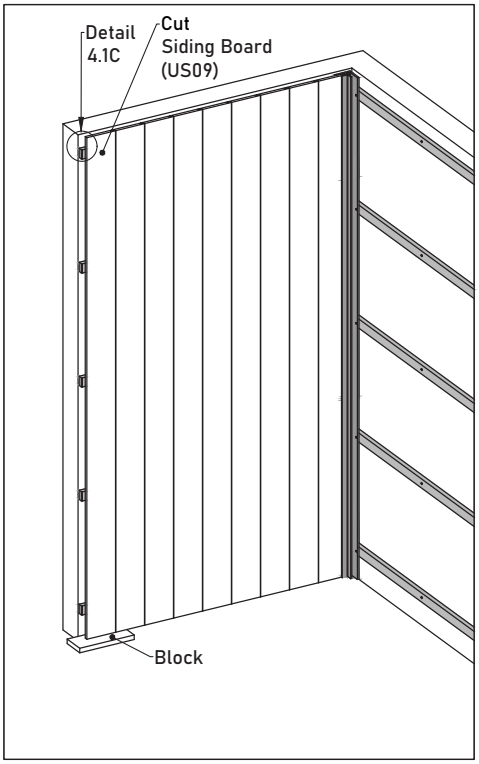


Diagram 4.1C

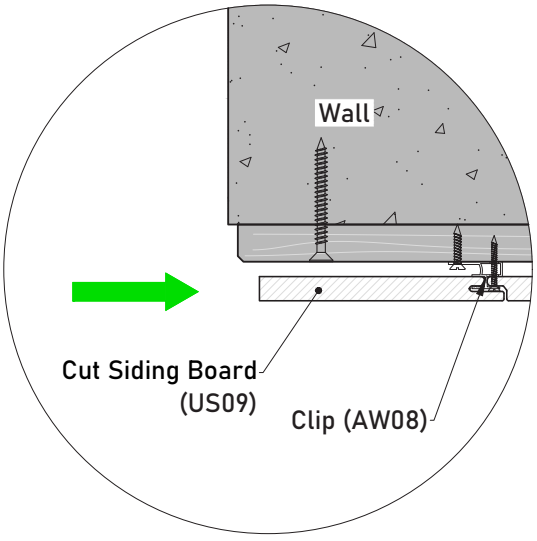


Detail 4.1C

4.1D Insert the F-Trim (US44) in place. On the top of the cut siding board, face fixing it together with the F-Trim (US44) onto the furring strip, as shown in **Diagram 4.1D** and **Detail 4.1D**.

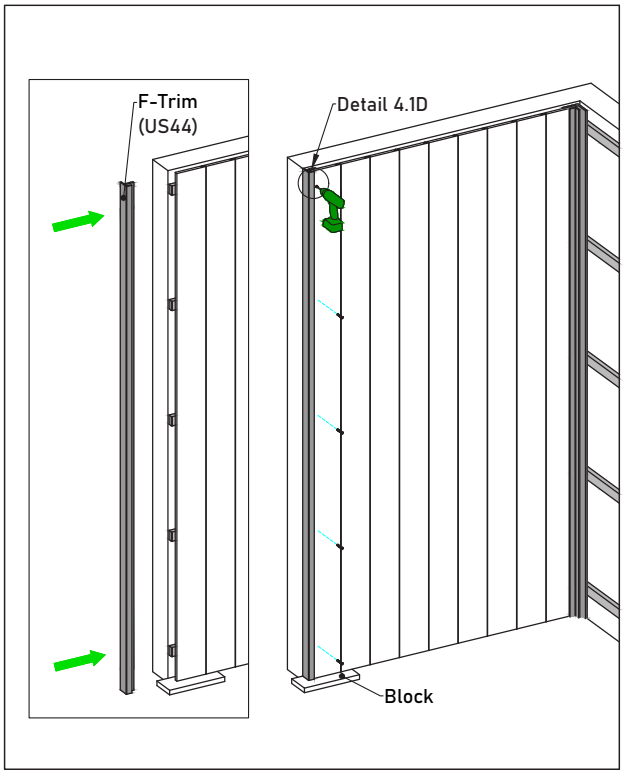


Diagram 4.1D

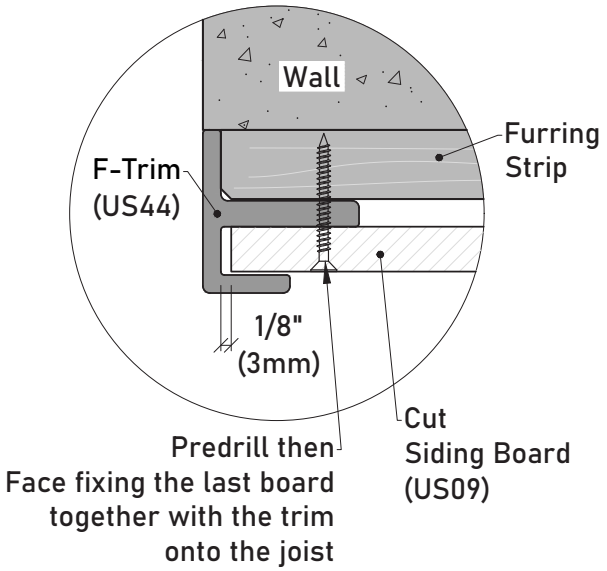


Detail 4.1D

## 4.1E

Fix the F-Trim (US44) onto the furring strip with screws, as shown in **Diagram 4.1E** and **Detail 4.1E**.

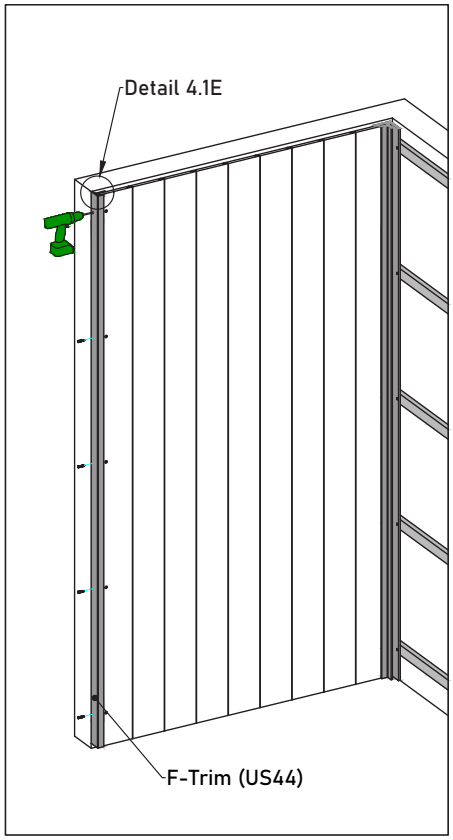


Diagram 4.1E

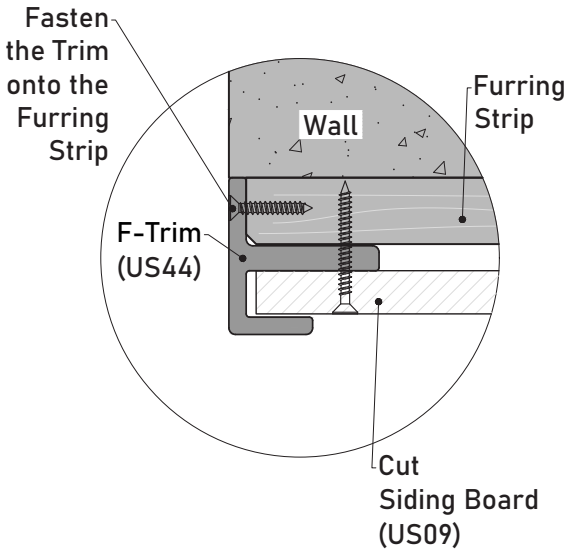


Detail 4.1E

## 4.2A Install the Last Siding Board for the Outside Corner

When you are at the last board at the outside corner, measure the distance to obtain the appropriate last board's ripping dimension, as shown in **Diagram 4.2A** and **Detail 4.2A**.

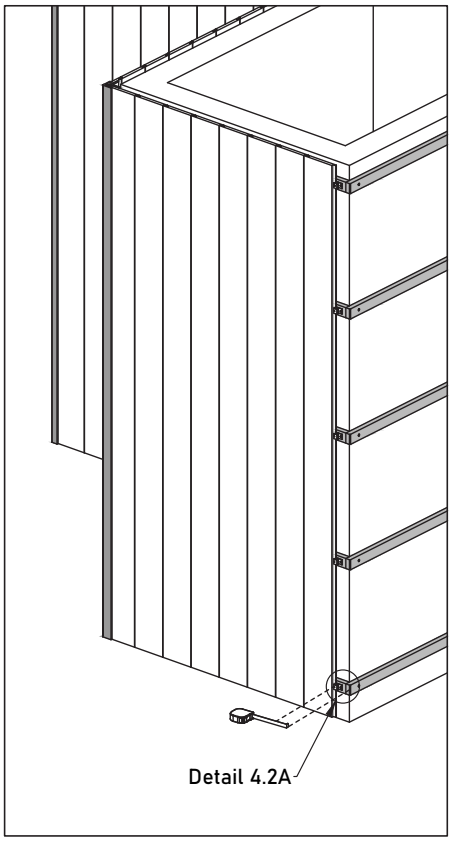


Diagram 4.2A

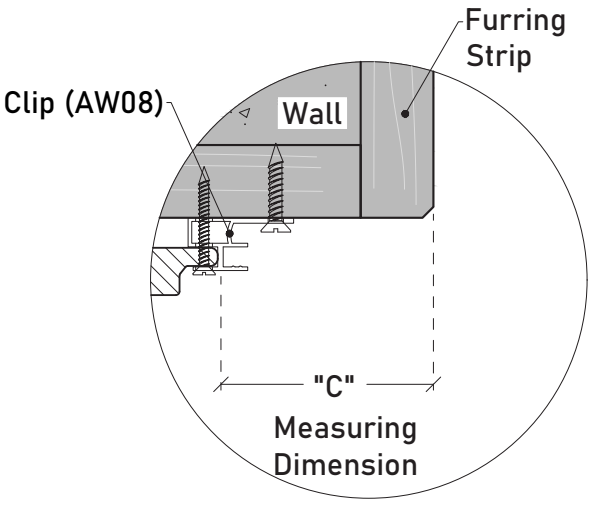


Detail 4.2A

4.2B Rip the board according to the measured dimension, as shown in **Diagram 4.2B** and **Detail 4.2B**.

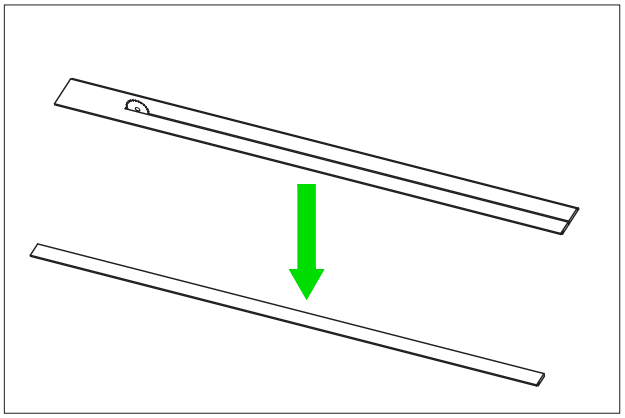

Diagram 4.2B

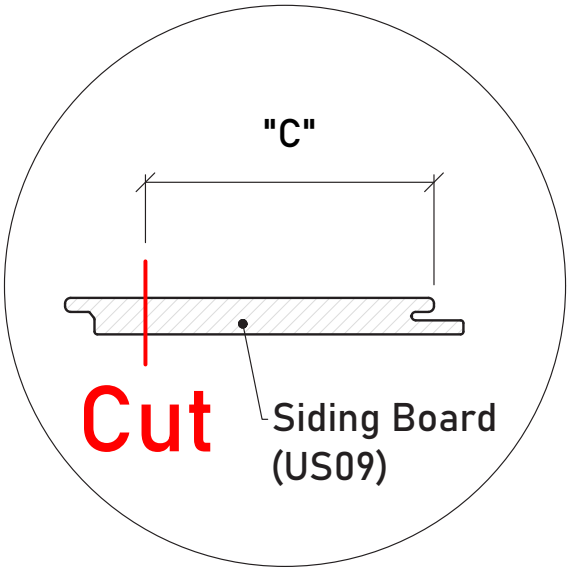


Detail 4.2B

4.2C Put the cut siding board in place, as shown in **Diagram 4.2C** and **Detail 4.2C**.

**Please Note:**

**1. Predrill the screw holes for the cut Siding Board to allow it to expand and contract. Please review page 5, section "Pre-drill" of this installation guide for further information.**
**2. Put a block under the cut Siding Board to keep the board in the same height, as shown in Diagram 4.2C**

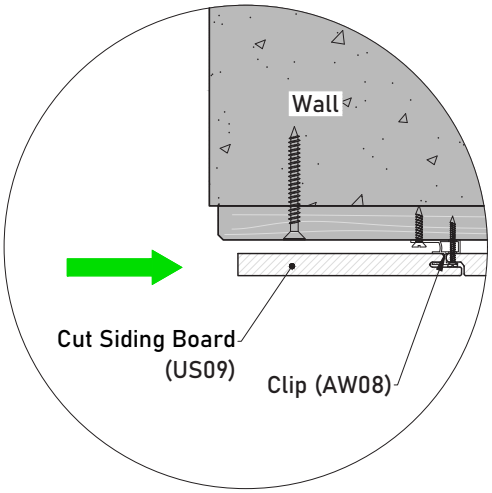


Diagram 4.2C

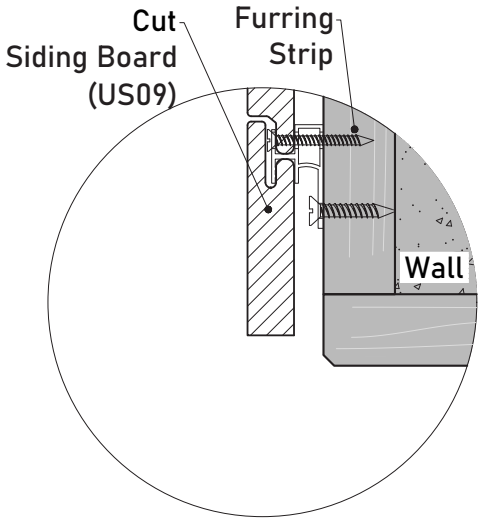


Detail 4.2C

4.2D Insert the Outside Corner Trim (US46) in place. On the top of the cut siding board, face fixing it together with the Outside Corner Trim (US46) onto the furring strip, as shown in **Diagram 4.2D** and **Detail 4.2D**.

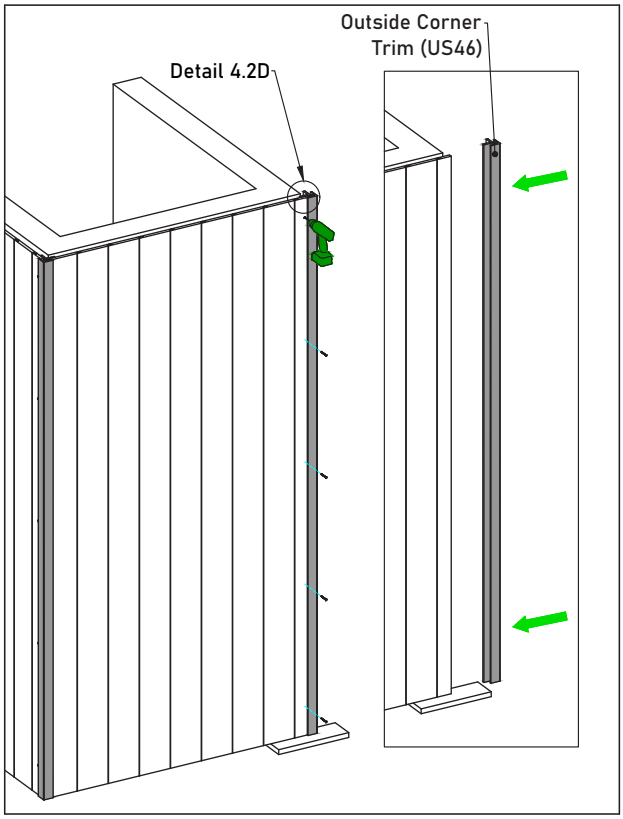


Diagram 4.2D

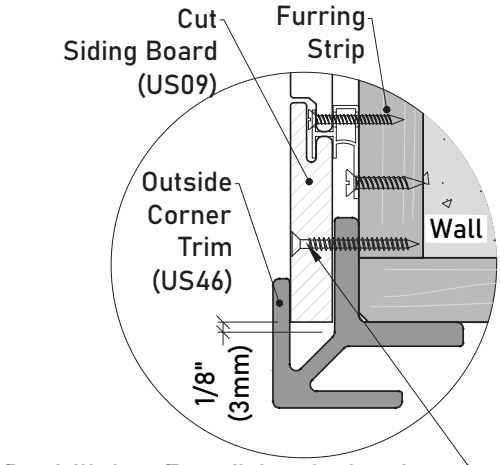


Predrill then Face fixing the last board with the trim together onto the furring strip

Detail 4.2D

4.2E Fix the Outside Corner Trim (US46) onto the furring strip with screws, as shown in **Diagram 4.2E** and **Detail 4.2E**.

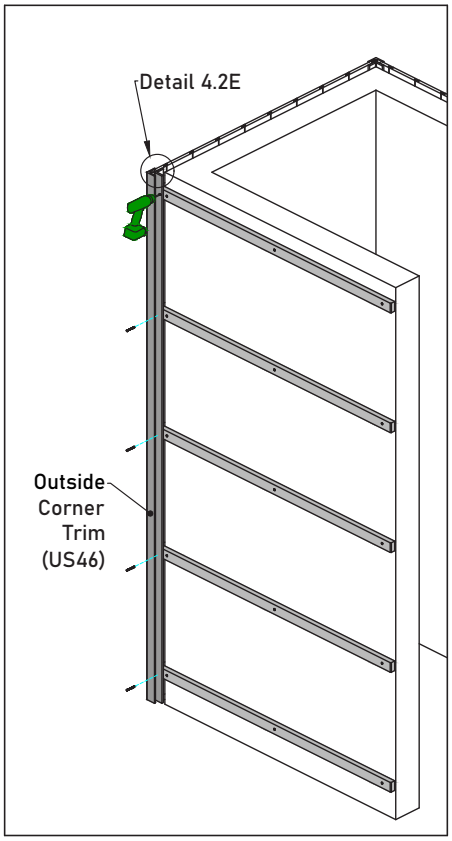


Diagram 4.2E

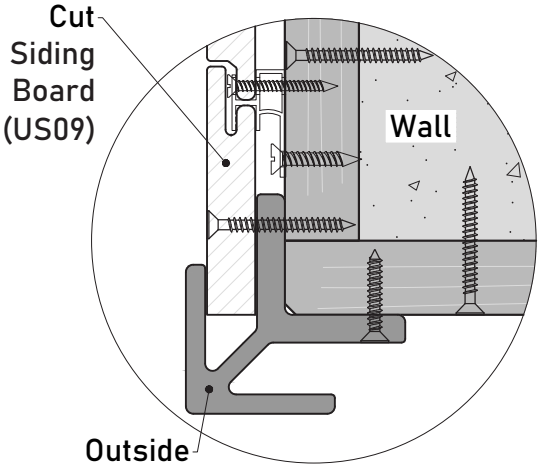


Detail 4.2E

# 5 Final appearance after completing the installation

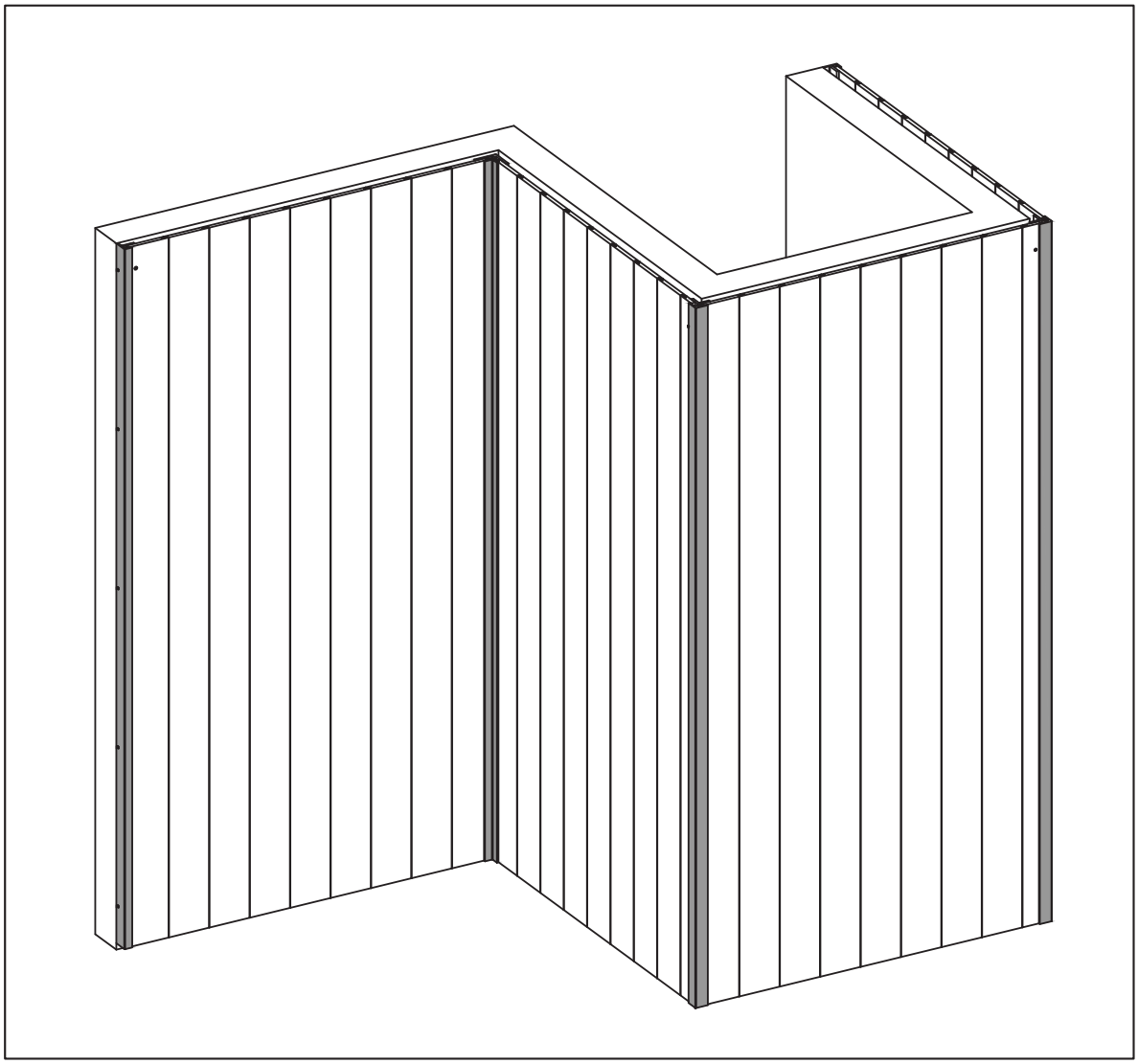

Diagram 5

# 6 Butt Joint Installation

**Option 1: No Butt Joint trimming**

It is required to lock the Clip (AW08) at the bottom of each board, and have a gap inbetween the boards to allow the board to expand and contract, as shown in **Diagram 6A**.

**Please Note:**

Refer to page 13 to determine the number of locking clips required.

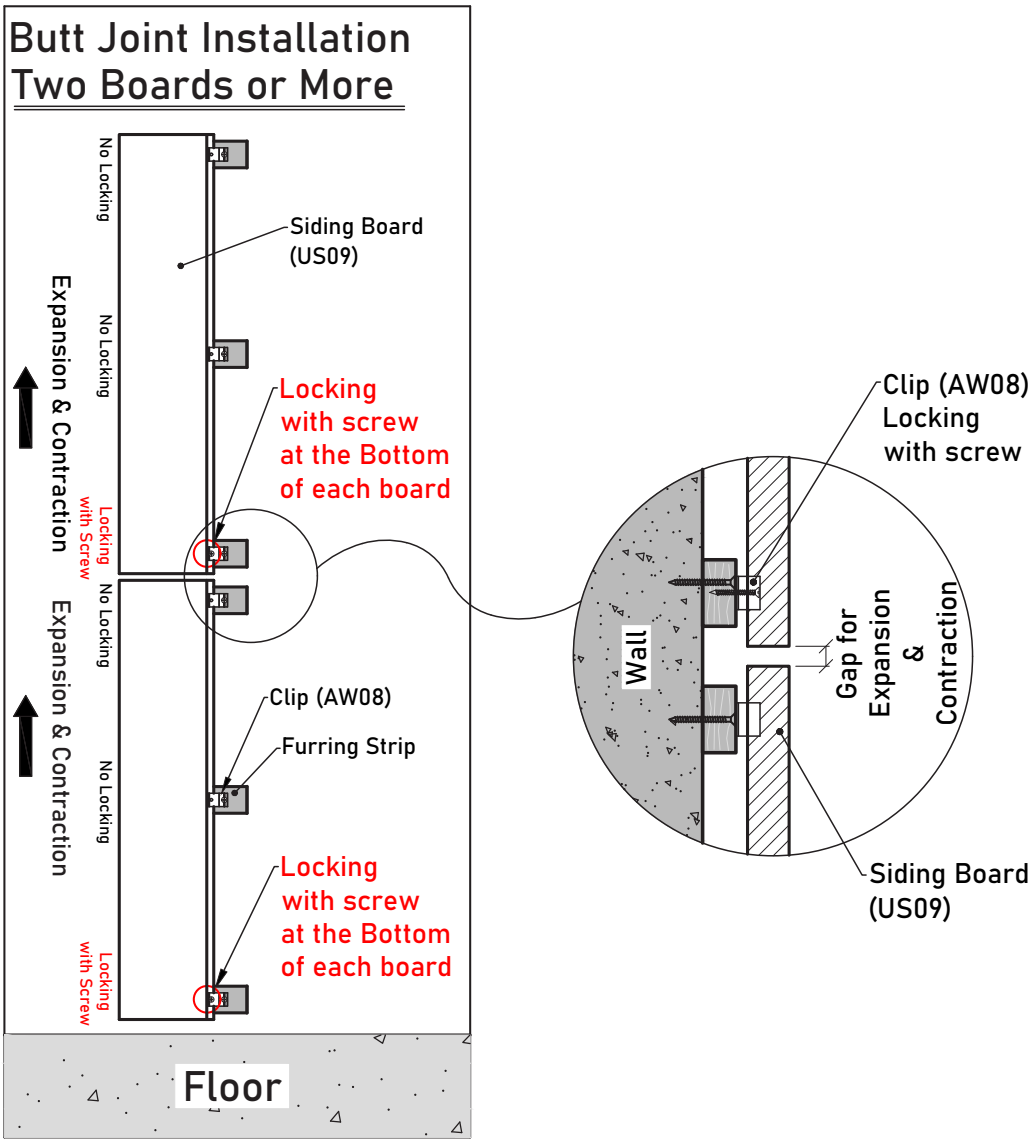


Diagram 6A

### Option 2: Install with Butt Joint trimming

It is recommended to utilize the cut F-Trim (US73) and aluminum angle for the butt joint installation. It is also required to lock the Clip (AW08) at the bottom of each board, as shown in **Diagram 6B** and **Detail 6B**.

**Please Note:**

Refer to page 13 to determine the number of locking clips required.

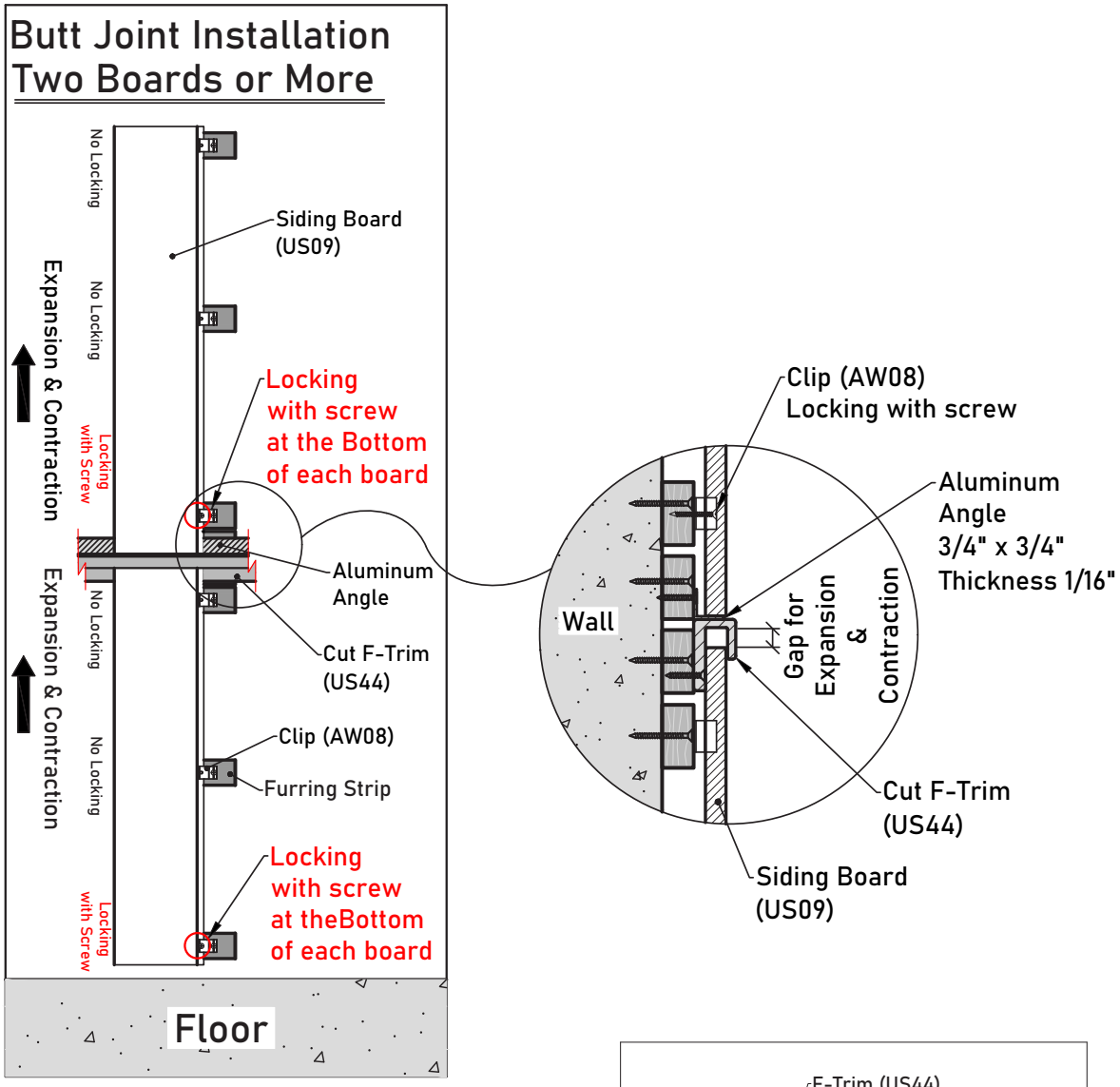


Diagram 6B

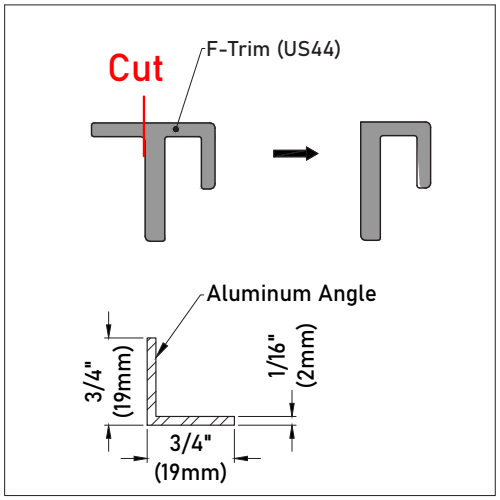


Detail 6B

# 7 Finish the top

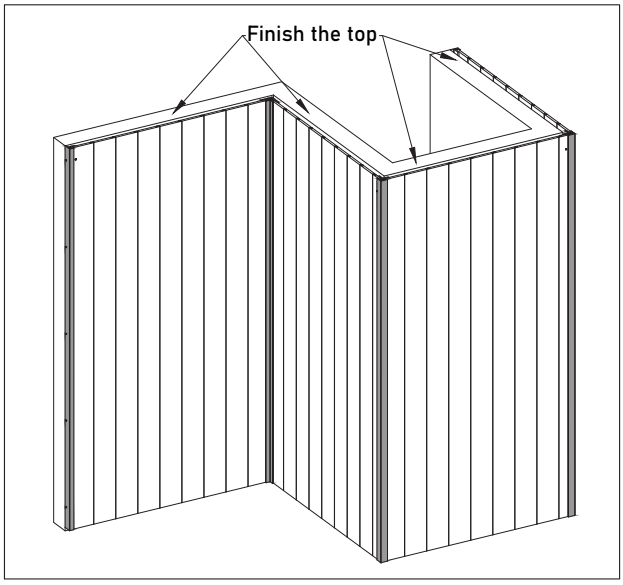


Diagram 7

There are two options recommended to finish the top of the siding.

**7.1** **Option 1**
Put a metal flashing over the siding top and fix it onto the furring strip with screws, as shown in ***Diagram 93***.

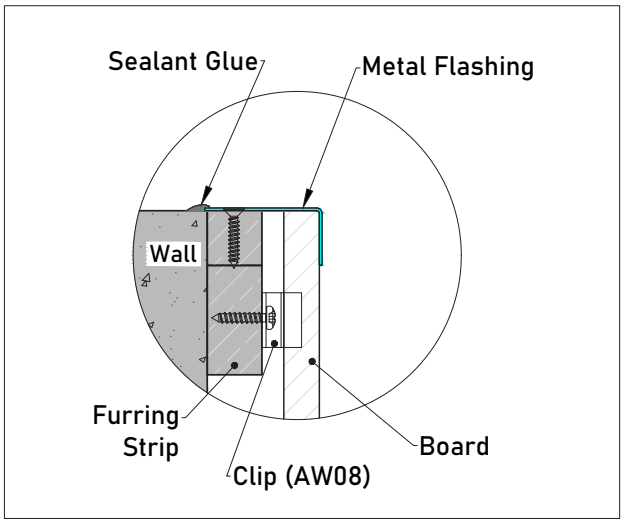


Diagram 7.1

**7.2A** **Option 2**
Cut the F-Trim (US44) centerpiece shorter to avoid interfering with the Clip (AW08), as shown in ***Diagram 7.2A***.

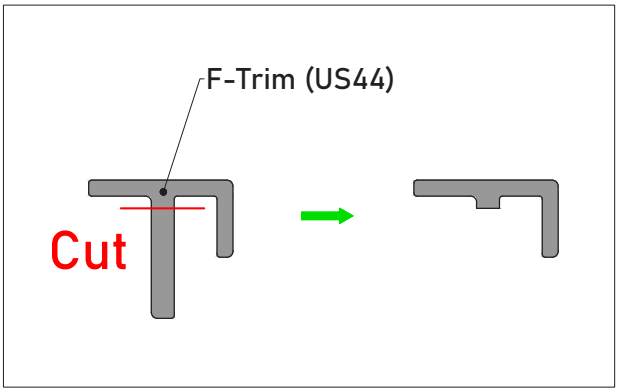


Diagram 7.2A

**7.2B** Put the cut F-Trim (US44) in place and attached it onto the furring strip with screws. Apply the sealant glue to seal the jountion edge, as shown in ***Diagram 7.2B***.

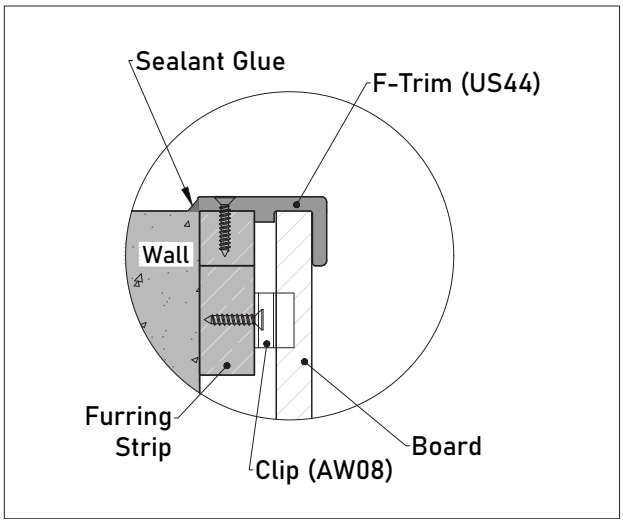


Diagram 7.2B



# All Weather Siding
# Vertical Installation Guide

v12 US

©2024 Newtechwood Corporation.
NewTechWood® is a registered trademark of Newtechwood Corporation.
To obtain a copy of the most current version of this installation guide,
please visit us online at www.newtechwood.com.

NewTechWood®



# All Weather Siding Ceiling Installation Guide

v20220215US

NewTechWood®

# CONTENTS


Important Note 3 - 5

Ceiling Parts 6 - 8

Expansion and Contraction Values Table 9

Locking the Siding Board 10 - 13

**Siding - Ceiling Installation**

-Framing 14

-Ceiling board installation 14 - 18

-Trimming 18 - 19


NOTE: Click on the heading to enter the section directly

**IMPORTANT Note:**

# Read All Sections Before You Start

For the most up to date information, please visit our website @ www.newtechwood.com

Prior to installing any composite siding system, it is recommended that you check with local building codes for any special requirements or restrictions. The diagrams and instructions outlined in this guide are for illustration purposes only and are not meant or implied to replace a licensed professional. Any construction or use of NewTechWood must be in accordance with all local zoning and/or building codes. The consumer assumes all risks and liability associated with the construction and use of this product.

## Safety

When dealing with any type of construction project, it is necessary to wear appropriate safety equipment to avoid any risk of injuries. NewTechWood recommends, but is not limited to the following safety equipment, when handling, cutting, and installing NewTechWood: gloves, a respiratory protection, long sleeves, pants, and safety glasses.

## Tools

Standard woodworking tools may be used. It is recommended that all blades have a carbide tip. Standard stainless steel or acceptable coated deck screws and nails are recommended.

## Environment

A clean, smooth, flat, and strong surface is needed to install NewTechWood's products correctly. Please check with local building codes before ever installing any type of siding. If installation does not occur immediately, NewTechWood's products need to be put on a flat surface at all times. It should NEVER be put on a surface that is NOT flat.

## Planning

Plan a layout for your siding before starting it to ensure the best possible looking siding for your project. Building codes and zoning ordinances generally apply to permanent structures, meaning anything that is anchored to the ground or attached to the house. So nearly every kind of siding requires permits and inspections from a local building department. We recommend drawing out a site plan of your proposed project that you intend to do to minimize errors and make your perfect Siding.

**Pressure wash on a scrap piece of material before using a pressure washer on the deck to make sure that your settings will not damage the Ultrashield coating.**

## Construction

NewTechWood UltraShield is NOT intended for use as columns, support posts, beams, joist stringers, support against a force, or other primary load-bearing members. NewTechWood must be supported by a code-compliant substructure. While NewTechWood products are great for retrofits, NewTechWood's products CANNOT be installed on existing siding boards.

## Static

Static can also be more prevalent in areas that are of higher altitude because the humidity is lower. For these areas, be careful of using conducive objects such as metal railing and chairs as static shocks might occur more often. A potential way to lower the amount of static shocks occurring is to apply Staticide (www.aclstaticide.com) on your deck or use anti-static mats before doorways.

## Ventilation

NewTechWood products CANNOT be directly installed onto a flat surface. It must be installed onto a substructure, so there is adequate and unobstructed air flow under the cladding to prevent excessive water absorption. A minimum of 1" (25mm) of continuous net free area under the siding surface is required for adequate ventilation on all siding, so air can circulate between adjacent members to promote drainage and drying.

## Heat and Fire

Excessive heat on the surface of NewTechWood products from external sources such as but not limited to fire or reflection of focussing sunlight from some optical objects can potentially harm NewTechWood products. This extreme elevation of surface temperatures, which exceeds that of normal exposure, can possibly cause NewTechWood products to melt, sag, warp, discolor, increase expansion/contraction, and accelerate weathering.

## Fasteners

When fastening NewTechWood's products all screws that are face fastened should always be driven in at a 90 degree angle to the siding surface. Toe nailing/screwing should never be done to the products. An extra joist should be added if a 90 degree angle cannot be driven into the board. All fasteners should be on their own independent joists, when two boards ends meet each other there must be a sister joist. The end of each board must sit on its own joist.

Use white chalk, straight boards, or string lines as templates for straight lines. NEVER USE COLORED CHALK. Colored chalk will permanently stain NewTechWood's products and are highly not recommended.

All nails/screws that are face fixed should always be stainless steel. Depending on the screws that you use when face fixing, there could be potential bulging or mushrooming. It is recommended to take care of these mushrooms/bulges by taking a rubber mallet and patting them down to give your siding a better look.

When choosing which screws/nails to use always check first with your local home centers and hardware stores to see if they have screws that are engineered specifically for composite wood. These screws/nails will always work and give NewTechWood's products the best looking outcome, using other screws/nails that are not recommended for composite could potentially damage/harm the cladding. If you are unsure which screw/nail to use, contact your manufacturer for more information.

## Predrill

It is recommended to use the #8 screw for face fixing the boards and the trims onto the joist.
When face fixing, it is recommended to predrill a slightly bigger hole on the board and the trim to allow for expansion and contraction, as shown in the below diagram,

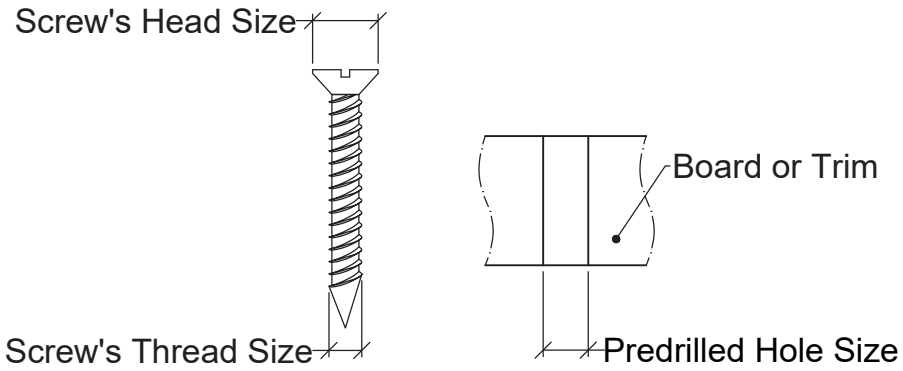


The predrilled hole size should be larger than the screw's thread size, from 1/16” (1.5 mm) to 5/64” (2 mm). Moreover, the predrilled hole size should also be smaller than the screw's head size, at least 5/64” (2 mm). A washer can be applied if the screw's head size is larger than the predrilled hole size, if it's below 5/64" (2 mm).

# Ceiling Parts

| Product | Purpose | Part |
|---|---|---|
| AW-02 | Used for the installation of the first board | 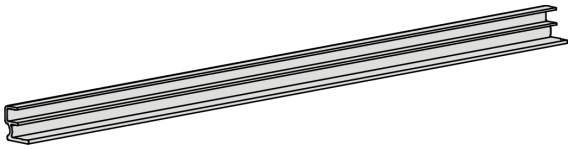 |
| AW-08 | Used at every joist to fix each board to the joist | 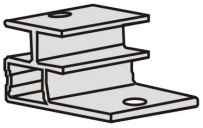 |
| T-7 | Used on the last Siding board |  |
| US09 | Siding Board | 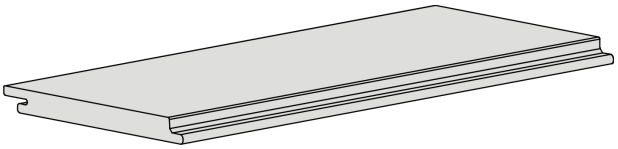 |
| US05 | Used for the trimming | 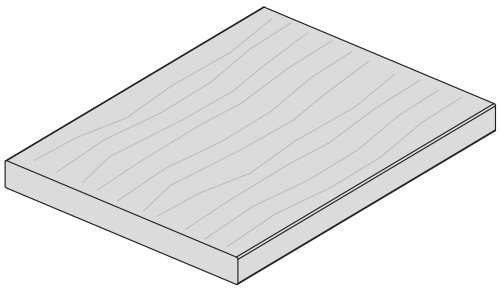 |

# Ceiling Screws
# (For Wood Joist)

**The table below shows the screws recommended to use for the installation, but not included.**

| Product | Purpose | Part |
|---|---|---|
| **#6 x 1 1/4" Stainless Steel SS304** | Used when locking the board into the Clip (AW08) | 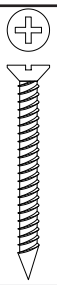 |
| **#8 x 3" Stainless Steel SS304 **depends on the thickness of your joists** | Used when installing the joist onto the wall | 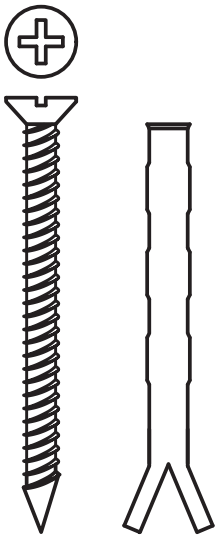 |
| **#8 x 1" Stainless Steel SS304 (Pan Head)** | Used when installing the Clip (AW08) and the Rubber Stopper (T-7) onto the wood joists | 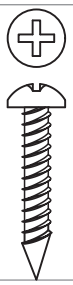 |
| **#8 x 1 1/4" Stainless Steel SS304 (Flat Head)** | Used when installing the boards and the trims onto the wood joists |  |

# Ceiling Screws
# (For Aluminum Joist)

**The table below shows the screws recommended to use for the installation, but not included.**

| Product | Purpose | Part |
|---|---|---|
| **#6 x 1 1/4" Stainless Steel SS304** | Used when locking the board into the Clip (AW08) | 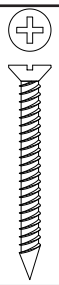 |
| **#8 x 3" Stainless Steel SS304 **depends on the thickness of your joists** | Used when installing the joist onto the wall | 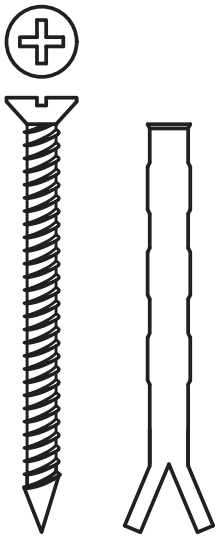 |
| **#8 x 1" Stainless Steel SS410 (Pan Head)** | Used when installing the Clip (AW08) and the Rubber Stopper (T-7) onto the aluminum joists |  |
| **#8 x 1 1/4" Stainless Steel SS410 (Flat Head)** | Use when installing the boards and the trims onto the aluminum joists |  |

*Note: All screws are based on our recommendation and if the installation requires something different than what is shown, a professional should be consulted before installing.

The following installation guide will use the above screw sizes.

# Expansion and Contraction Values

NewTechWood siding boards will experience expansion and contraction with changes in temperature. Expansion and contraction are most significant where extreme temperature changes occur. Fastening the deck planks according to the gapping requirements noted in the following table accommodates for this movement.

## Expansion and Contraction table of values for North America, Canada, Australia and Asia

Length (Feet)

| Installation Temperature (Farhenheit) | 3 | 8 | 9 | 10 | 12 | 13 | 16 | 18 | Gap (in) |
|---|---|---|---|---|---|---|---|---|---|
| **32** | 1/16 | 2/16 | 2/16 | 3/16 | 3/16 | 4/16 | 4/16 | 5/16 | |
| **41** | 1/16 | 2/16 | 2/16 | 2/16 | 3/16 | 3/16 | 4/16 | 4/16 | |
| **50** | 1/16 | 2/16 | 2/16 | 2/16 | 2/16 | 3/16 | 3/16 | 3/16 | |
| **59** | 1/16 | 1/16 | 1/16 | 2/16 | 2/16 | 2/16 | 2/16 | 3/16 | |
| **68** | 3/64 | 1/16 | 1/16 | 1/16 | 1/16 | 2/16 | 2/16 | 2/16 | |
| **77** | 3/64 | 1/16 | 1/16 | 1/16 | 1/16 | 1/16 | 1/16 | 1/16 | |
| **86** | 3/64 | 3/64 | 3/64 | 3/64 | 3/64 | 1/16 | 1/16 | 1/16 | |

**Note: If you are still unsure of what gapping to use, contact the manufacturer and they will give you the correct gapping requirements based on your environment and area.**

# Locking the Siding Board

Since the composite wood must allow for expansion and contraction due to temperature change, the board must be locked at one fixed point but only one point to allow the remaining board to expand and contract freely. In the case there is a need to lock the board, Clip (AW08) comes with a separate hole.

**It is important that DO NOT LOCK any other clips for the same board.**

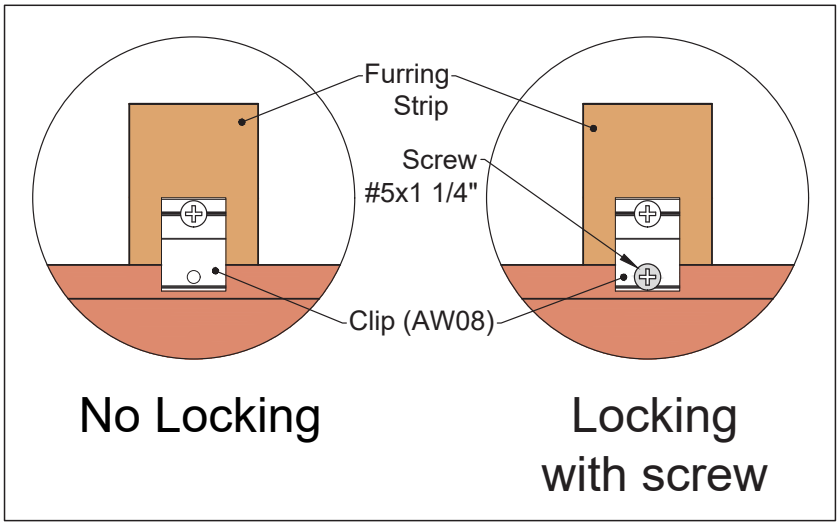


**- Horizontal Installation -**

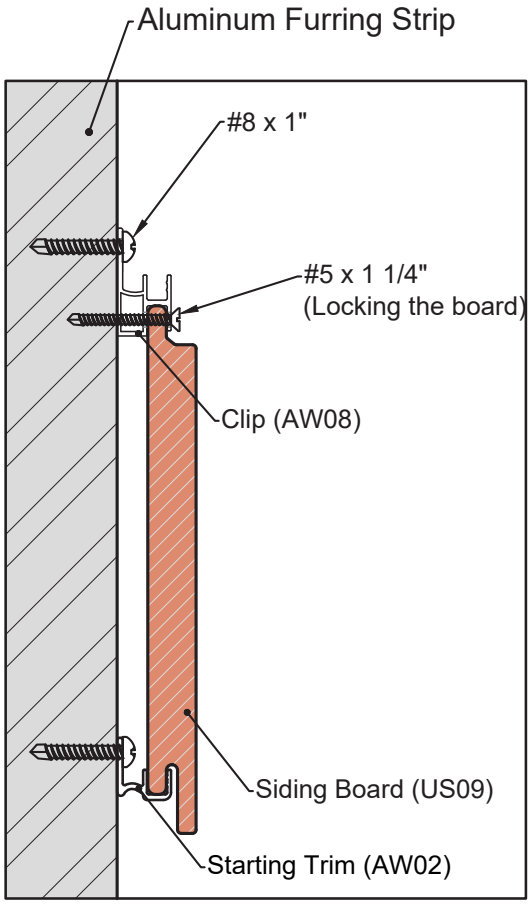


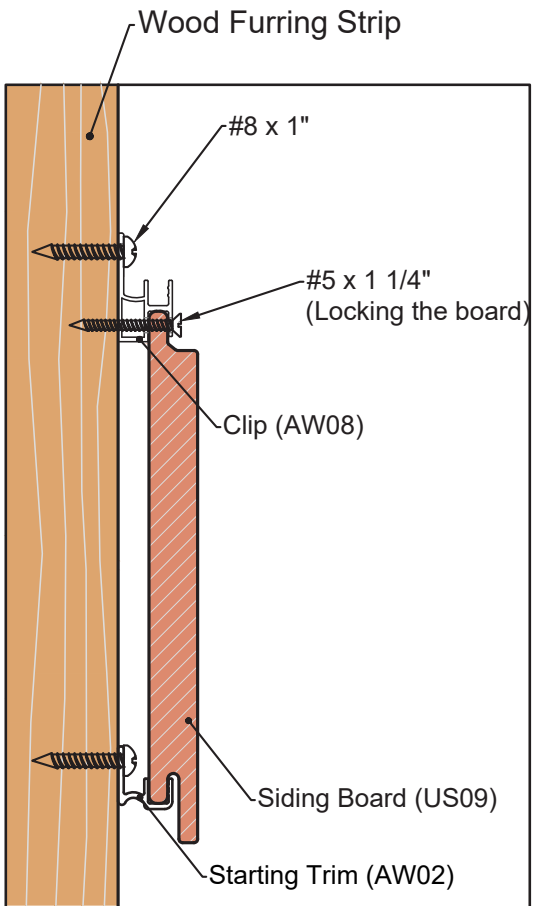

When installing horizontally, it is required to lock the Clip (AW08) at the middle of the board, as shown in ***Diagram 1***.

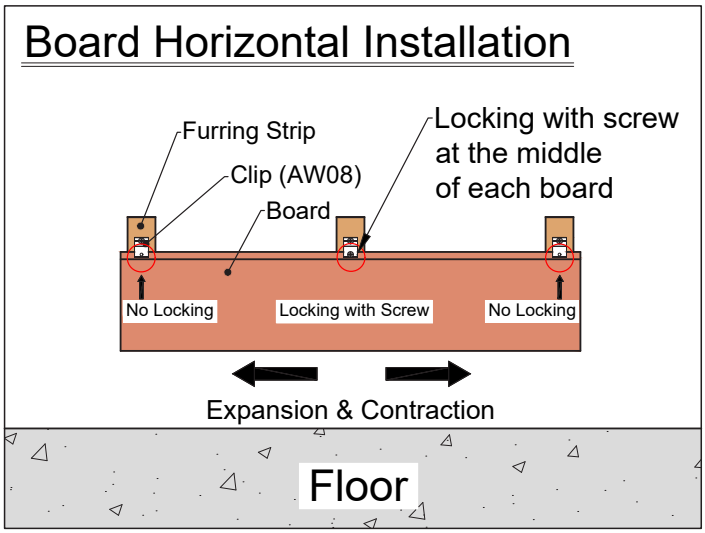


**Diagram 1**

When installing more than one board horizontally, it is recommended to utilize the I-Trim (US45) at each butt joint. It is also required to lock the Clip (AW08) at the middle of each board, as shown in ***Diagram 2***.

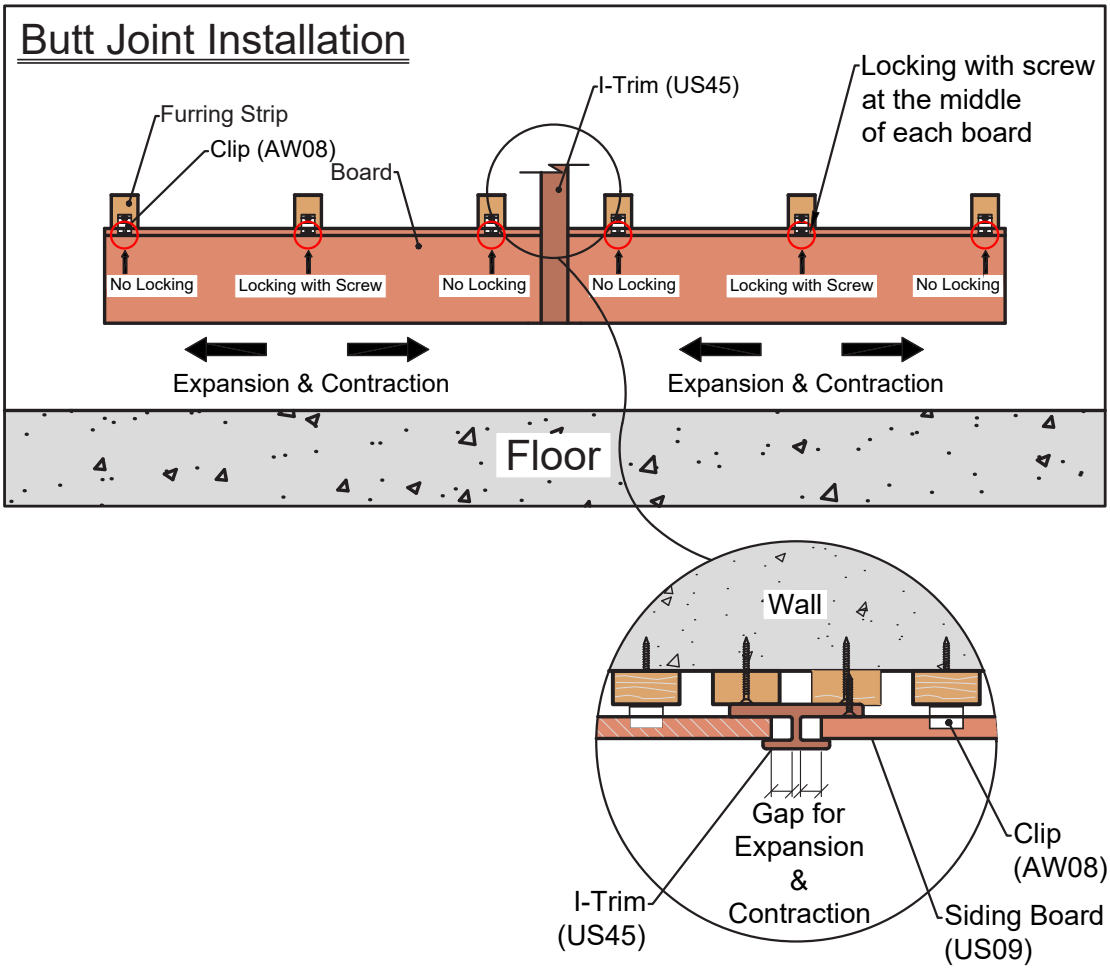


**Diagram 2**

## - Vertical Installation -

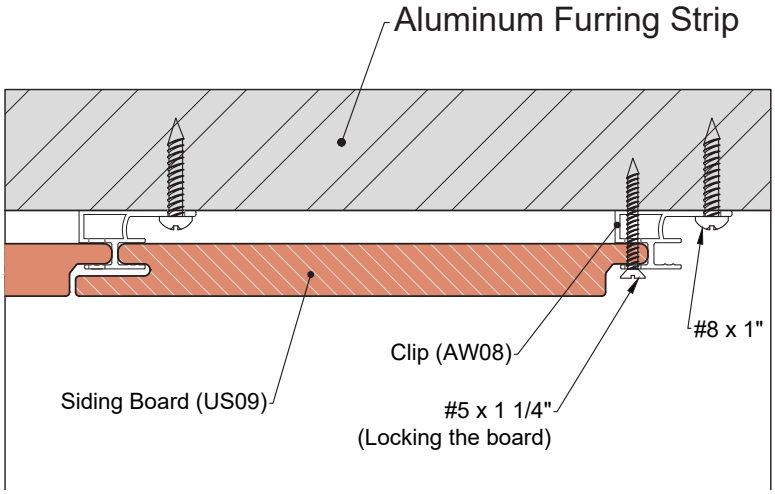


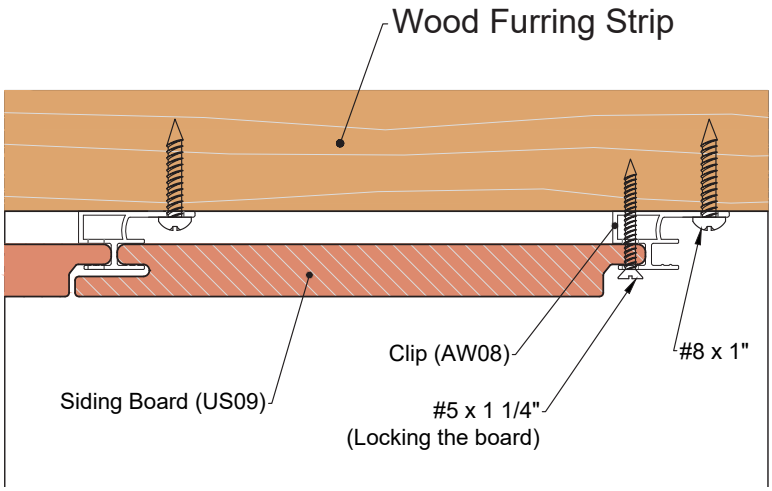


When installing vertically, it is required to lock the Clip (AW08) at the top of the board, as shown in ***Diagram 3***.

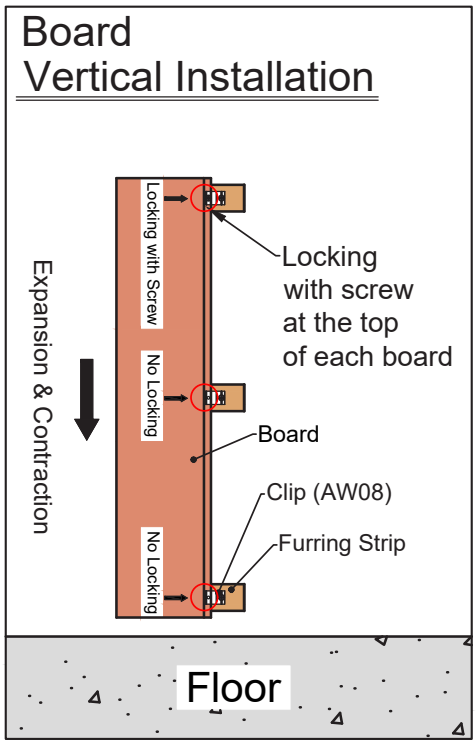


**Diagram 3**

When installing more than one board vertically, it is recommended to utilize the I-Trim (US45) at each butt joint. It is also required to lock the Clip (AW08) at the top of each board, as shown in ***Diagram 4***.

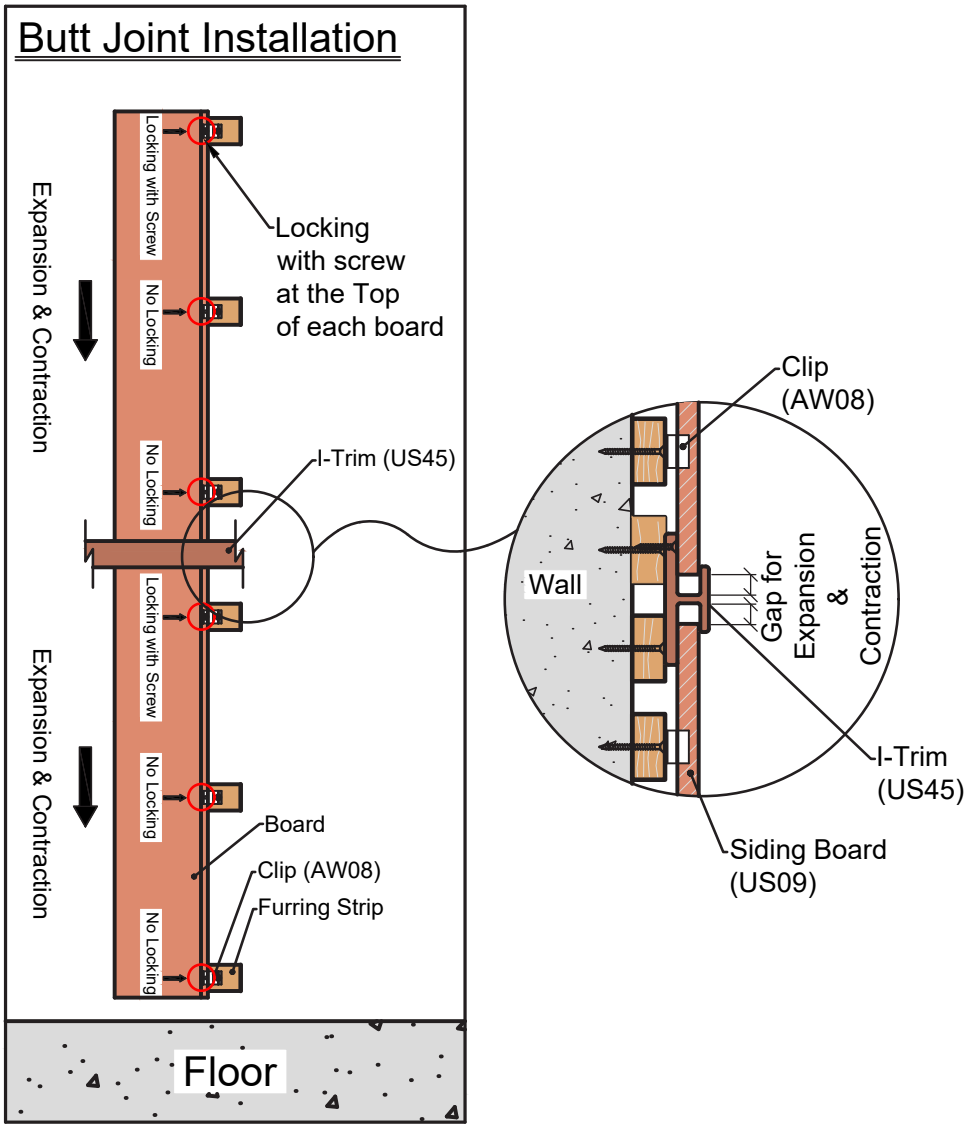


**Diagram 4**

# Ceiling Installation

## 1 Framing

Fix the joists onto the ceiling where you intend to install the board. It is recommended to apply the joist span of not more than 12” (300mm), as shown in ***Diagram 92***.

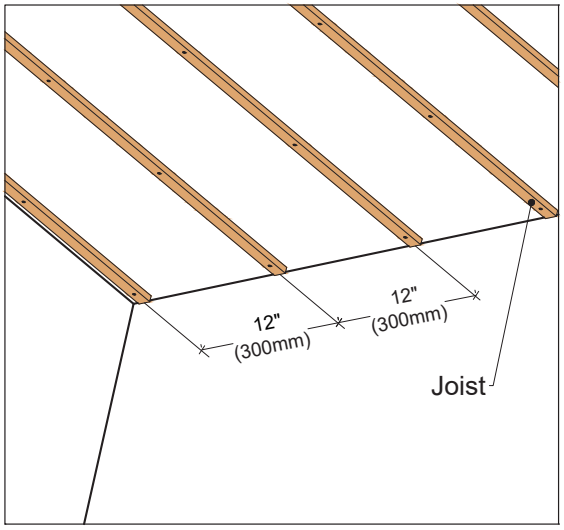


**Diagram 92**

## 2 Fasten the Starting Trim (AW02) onto the end of the joist with screws, as shown in ***Diagram 93***.

**Note:**
**1. Pre-drill the screw holes for the Starting Trim (AW02) before installation.**

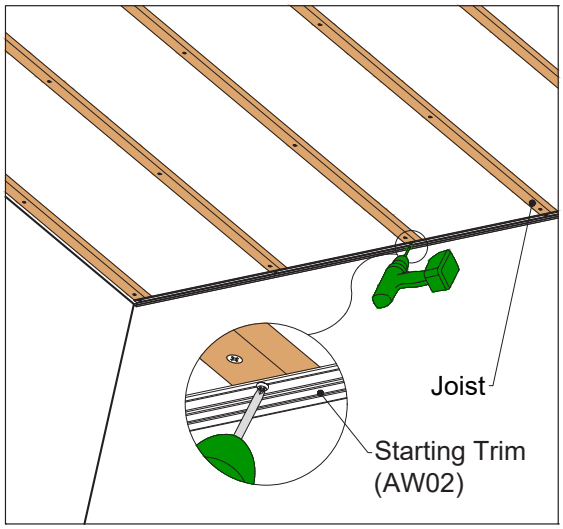


**Diagram 93**

## 3 Ceiling board installation

Put the Siding Board (US09) over the Starting Trim (AW02) and fasten it to the joist with Clip (AW08), as shown in ***Diagram 94*** and ***Diagram 95***.

**Note:**
**1. Since the composite wood must allow for expansion and contraction due to temperature change, the board must be locked at one fixed point but only one point to allow the remaining board to move freely. When installing horizontally, it is required to lock the Clip (AW08) at the middle of each board, as shown in** *Detail 95-1*.
**DO NOT LOCK any other Clip (AW08) for the same board.**
**Please review** *page 10*, **“***Locking the Siding Board***” of this installation guide for further information.**

**2. The gap between the Siding Board (US09) and the adjacent walls is vital to avoid warping or buckling, as shown in** *Detail 95-2*. **Please select the appropriate gap value according to the** *Expansion and Contraction Values Table* **on** *page 9* **of this installation guide.**

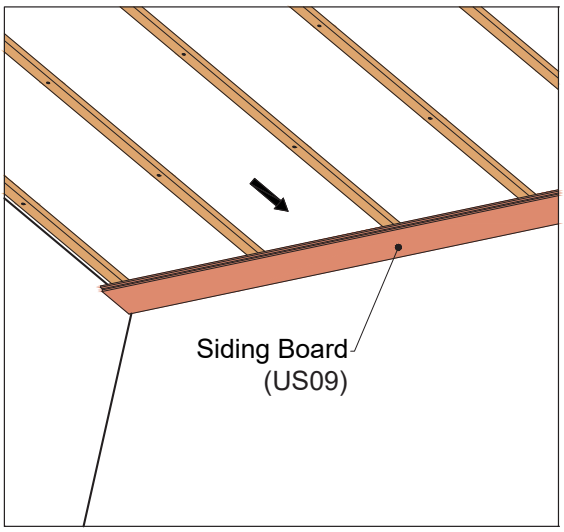


**Diagram 94**

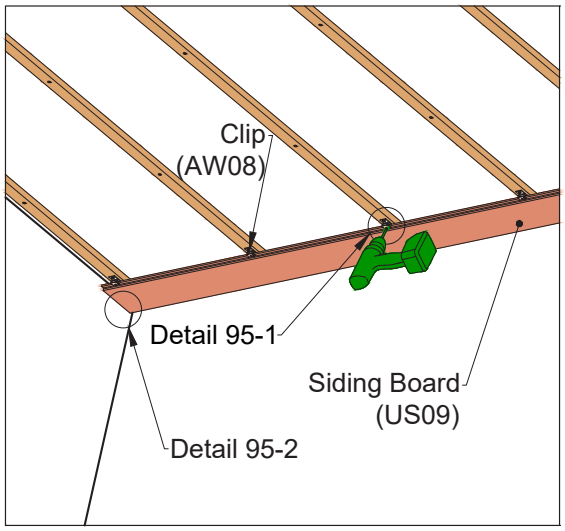


**Diagram 95**

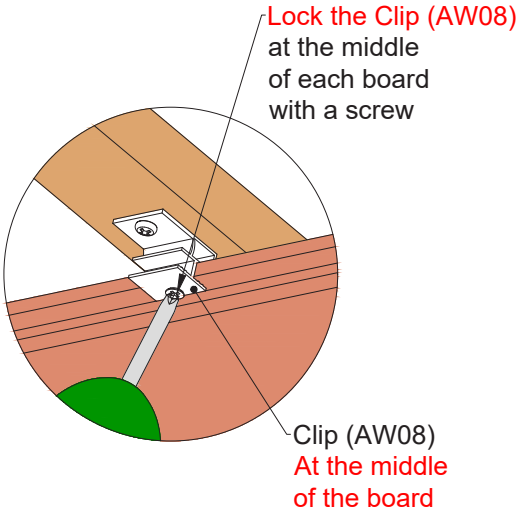


**Detail 95-1**

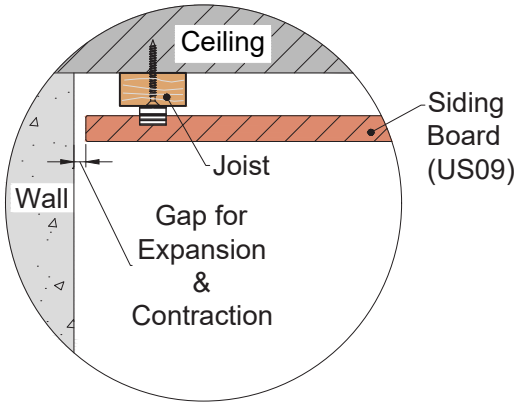


**Detail 95-2**

4 Put the next Siding Board (US09) in place and slide it inside the Clip (AW08), as shown in ***Diagram 96***. Then fasten it to the joist with Clip (AW08), repeat the same procedure as installation Step 3.

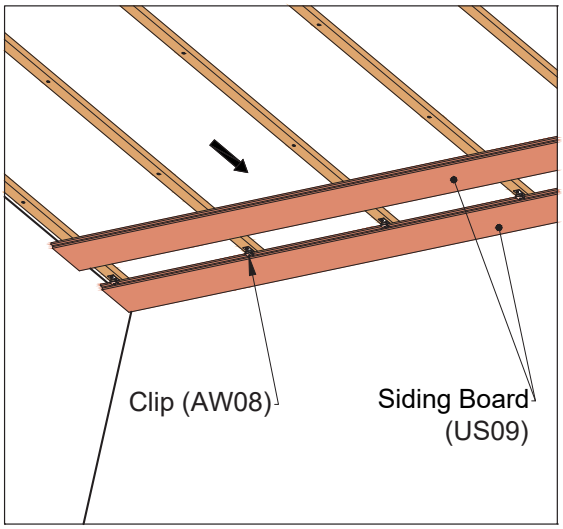


**Diagram 96**

5 When you are at the Siding's last board, measure the distance between the end of the joist and the Clip (AW08), as shown in ***Diagram 97*** and ***Detail 97-1***.

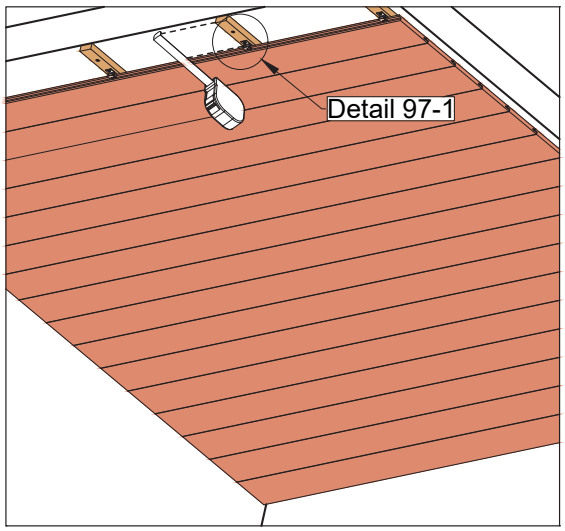


**Diagram 97**

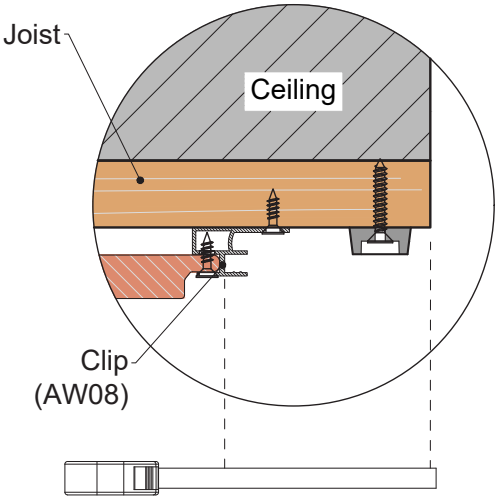


**Detail 97-1**

6 Cut the Siding Board (US09) according to the measured length, as shown in ***Diagram 98*** and ***Detail 98-1.***

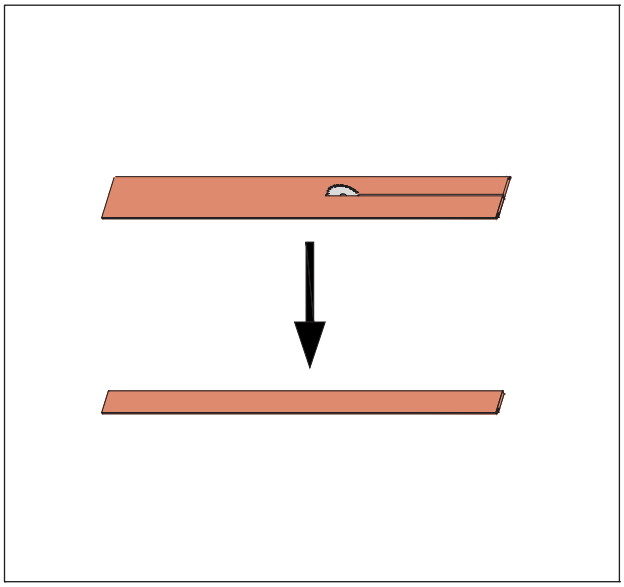

**Diagram 98**

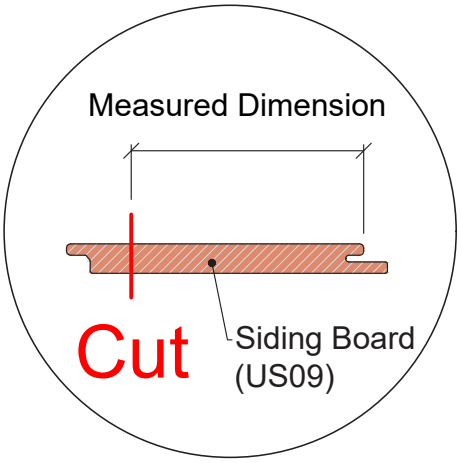


**Detail 98-1**

**7** Then install the Rubber Stopper (T-7) onto the joist with screws, as shown in ***Diagram 99*** and ***Detail 99-1***.

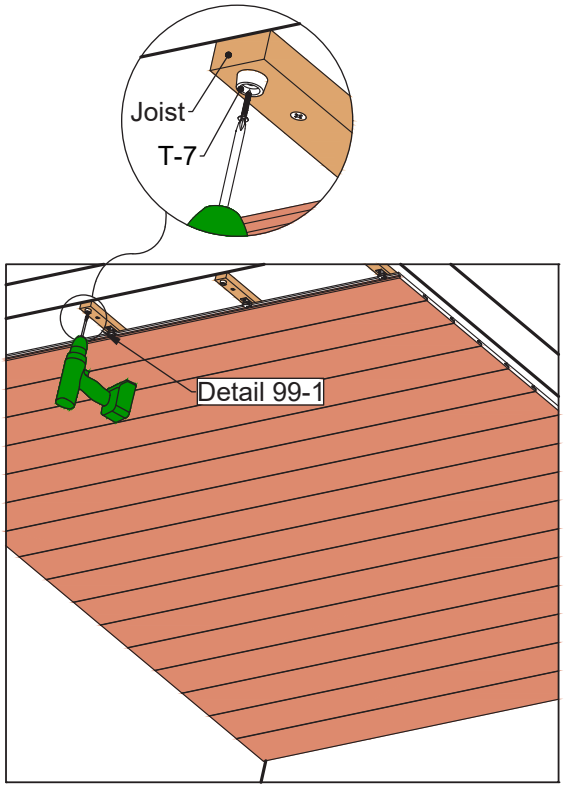


**Diagram 99**

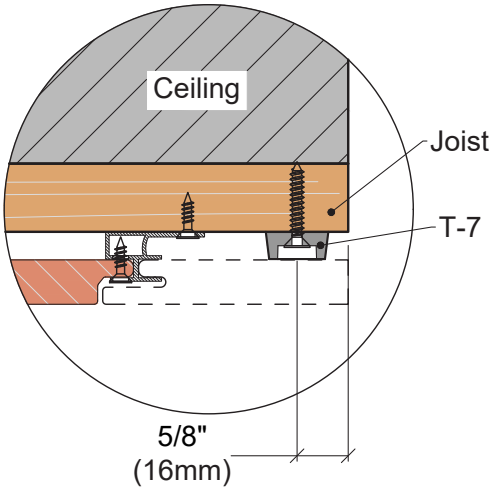


**Detail 99-1**

**8** Put the cut Siding Board (US09) over the Clip (AW08) in position and pre-drill the screw holes before installation, as shown in ***Diagram 100*** and ***Detail 100-1***.

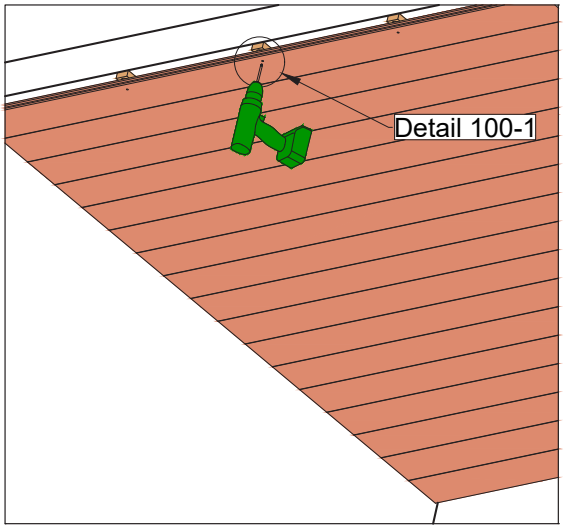


**Diagram 100**

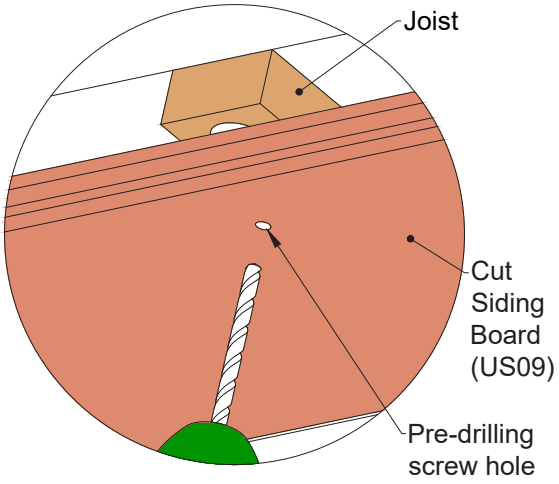


**Detail 100-1**

**9** Face fix the cut Siding Board (US09) onto each joist along the length of the board over the Rubber Stopper (T-7), as shown in ***Diagram 101*** and ***Detail 101-1***.

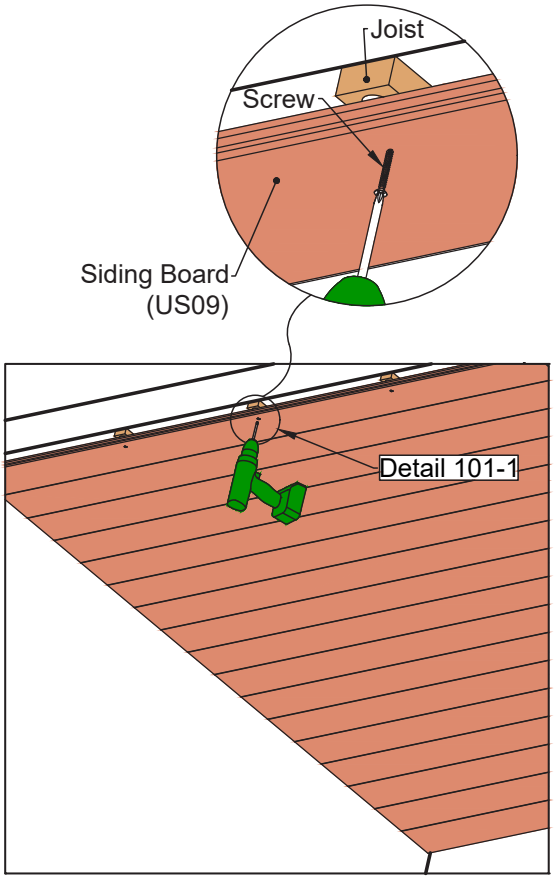


**Diagram 101**

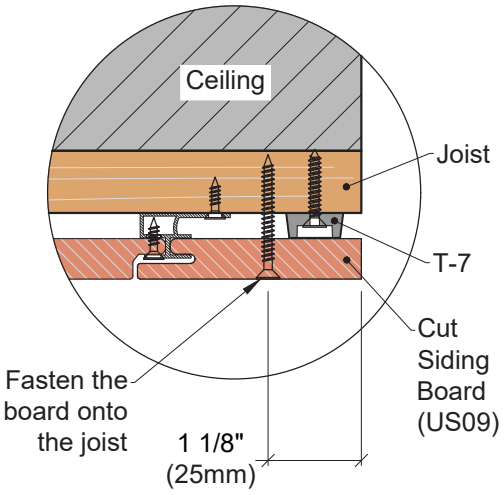


**Detail 101-1**

## 10 Trimming

Cut the Fascia (US05) into the desired width, as shown in ***Diagram 102***.

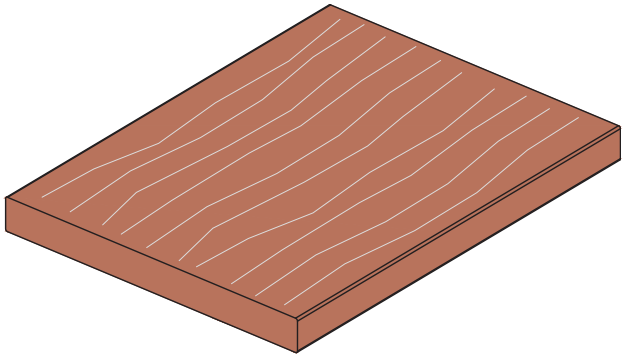

**Fascia (US05)**

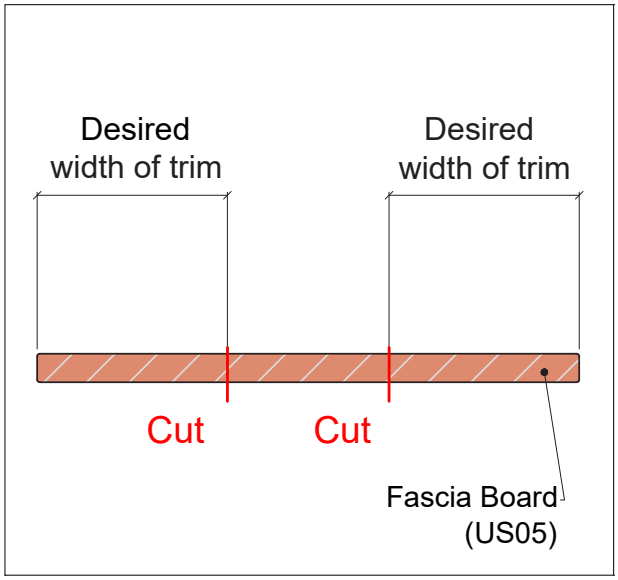


**Diagram 102**

**11** Put the board's cut edge toward the ceiling board (US09) underside, then face fix it onto the wall with screws at least 19 11/16" (500mm) on center, as shown in ***Diagram 103*** and ***Detail 103-1***.

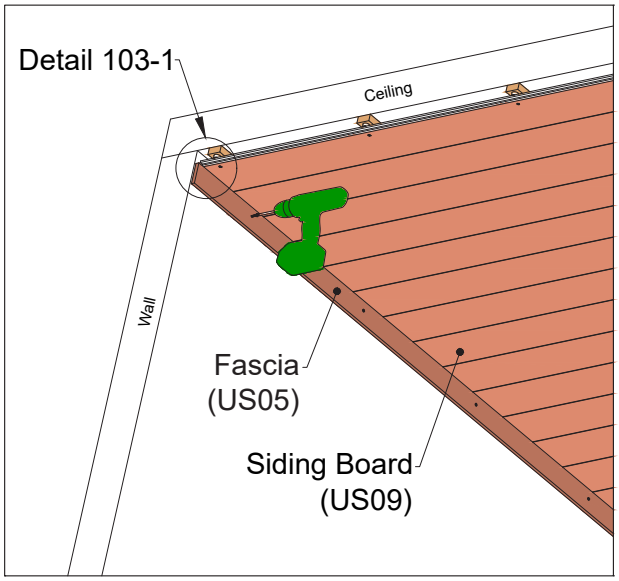


**Diagram 103**

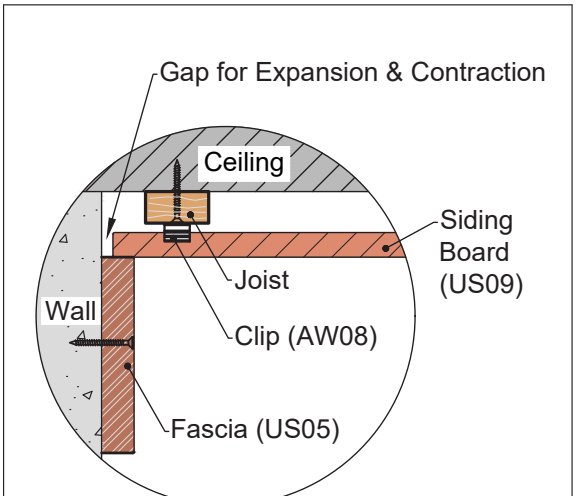


**Detail 103-1**

**12** Miter cut the trims according to the wall corner's angle for adjoining the trims in the wall corner, as shown in ***Diagram 103*** and ***Detail 103-1***.

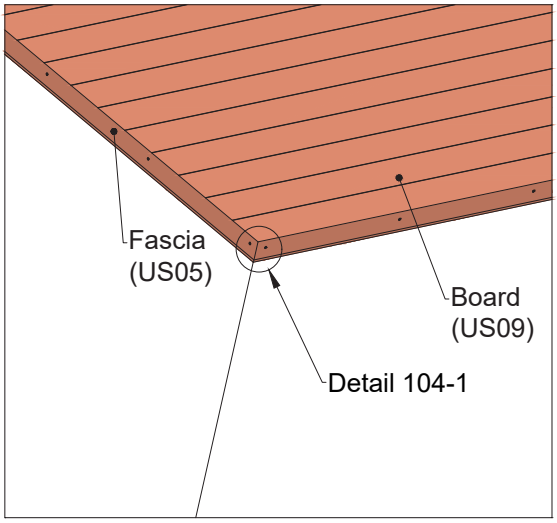


**Diagram 104**

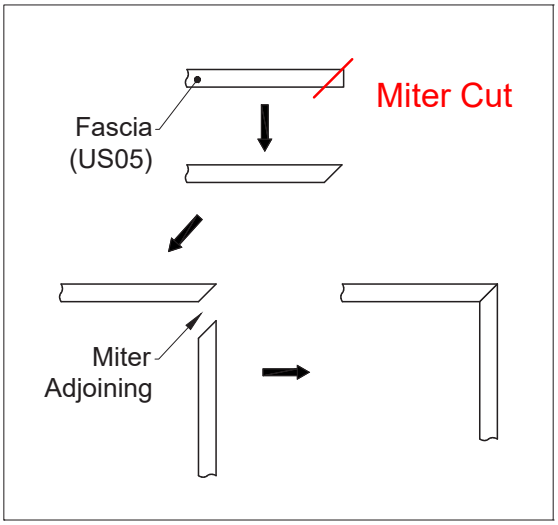


**Detail 104-1**



# All Weather Siding
# Ceiling Installation Guide

v20220215US

©2022 Newtechwood Corporation
NewTechWood® is a registered trademark of Newtechwood Corporation.
To obtain a copy of the most current version of this installation guide,
visit us online at www.newtechwood.com.

NewTechWood®