HDX 5-Tier Shelf Example Configurations

48”x75”x20” 5-Tier shelves can be customized using short and tall pole lengths to create over 40 different configurations. Be sure to use the same pole size to build each shelf section.

WARNING

- Unit must be placed on a level surface or leveled for use.
- Do not sit or stand on or allow anyone to climb, sit or stand on the assembled product.
- Mount the unit to the wall for tip over prevention, as unit can tip over causing severe injury or death.
- Mount the unit to the wall for max weight capacity, do not exceed claimed weight capacity.
- Distribute weight evenly on each shelf and keep heavier loads on the bottom.
- Do not exceed recommended shelf spacing, stated on shelf label, by connecting poles.

CUSTOMER SERVICE/PARTS
If replacement parts or customer service is needed, please contact customer service by scanning the QR Code with your SmartPhone or by visiting requestpart.com.

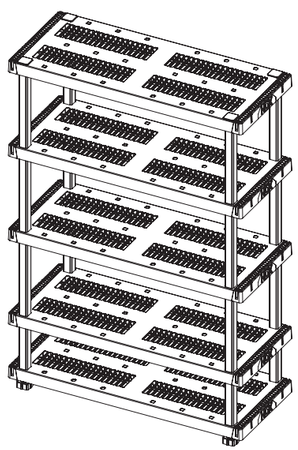
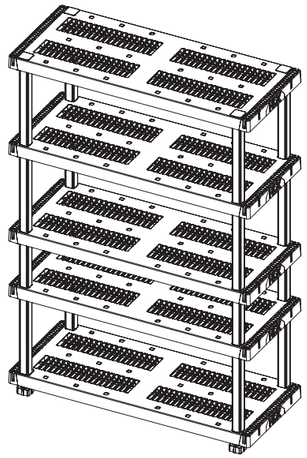
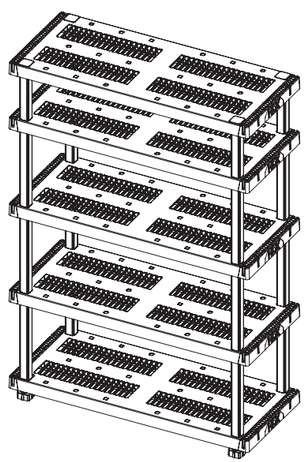
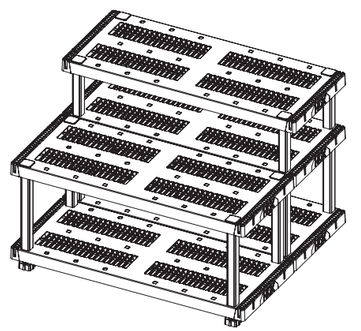
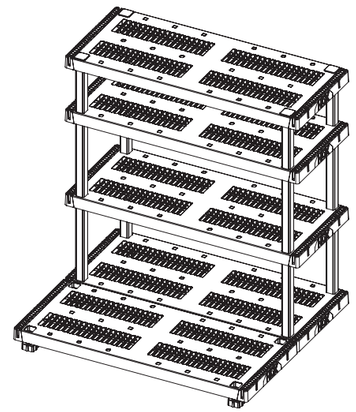
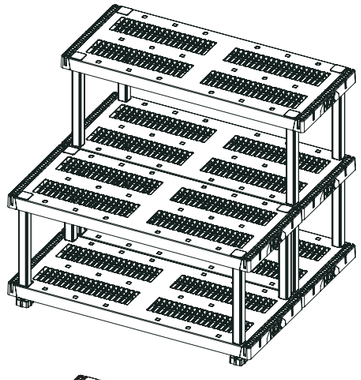
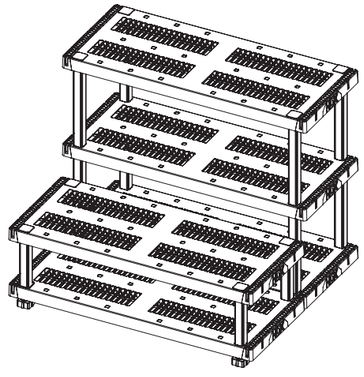
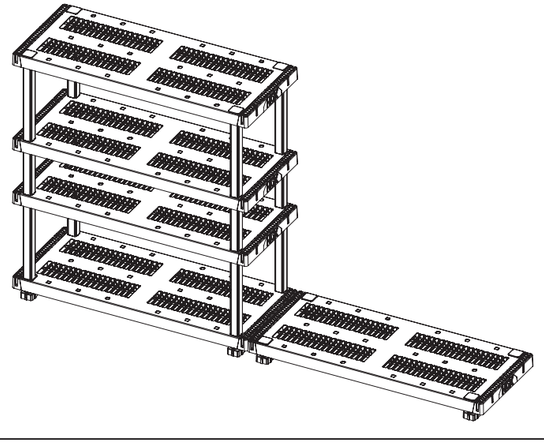
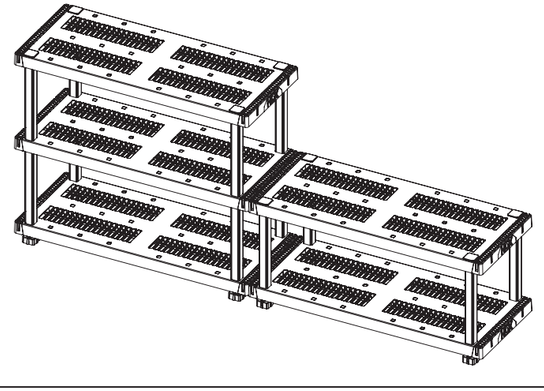

STEP 7.1 Wall Bracket Installation

Recommended Tools
- Impact/power drill or phillips head screwdriver
- Hammer (if needed for wall anchor)
- Safety glasses
- Pen/pencil

Provided Hardware (Located in Component Boxes)
- 10 Sized phillips head screw (8x screws)
- #10-#12 Sized plastic dry wall anchor (8x anchors)

Directions:
- Align wall brackets with poles.
- Locate nearest stud.
  - If you are not able to find a stud, use the provided wall anchor.
- Place wall bracket as noted on instruction sheet (Step 7).
- If desired, using a pen or pencil, mark your drill locations.

Use provided mounting hardware:
- 8x Screws
- 4x Brackets
- 8x Wall anchors (for installation into drywall if needed)
  - If anchor is needed, a 1/4” drill bit (not provided) will be needed.
- If anchor is needed, use a hammer (not provided) to tap anchor flush into the wall.

Note:
For installation into masonry, block or surfaces other than drywall, consult with your hardware retailer for the correct fasteners.

