GLOBAL WATER

MODEL
G3 & G4

Operation Manual

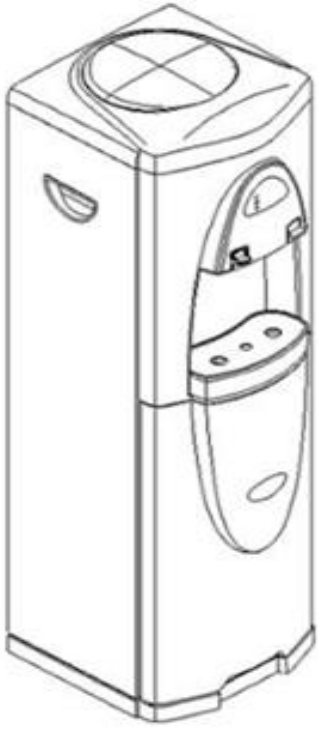

Please read these instructions before operating this unit

Table of Contents

Introduction……3
Receiving……4
Description Model G3 & G4……5/6
Water Production Flow Chart……7
Positioning the Cooler……8
Water Cooler Connections……9
Feed Water Connection……10
Drain Connection……11
EZ Connections……12
Start Up Flush……13
Tank Flush……14
Cleaning and Maintenance…… 15
Filter Replacement……16
Reverse Osmosis Membrane Replacement…… 17
Troubleshooting……18
Specifications……19
Warranty……19

List of Figures

Figure 1. Assembly Drawing, Model G3…… ….5
Figure 2. Assembly Drawing, Model G4……6
Figure 3. Water Flow Chart G3 & G4……7
Figure 4. Water Cooler Connections…… 9
Figure 5. Drain Connections for "RO" Models……11
Figure 6. Filter Configuration Model "F"…… 13
Figure 7. Back View of Coolers……14
Figure 8. RO Membrane Installation……17

Introduction

Congratulations on your purchase of our revolutionary Bottle-less Water Cooler! Our coolers are all designed to replace the conventional 5-gallon water bottles while eliminating the hassles of deliveries, lifting bottles, and by eliminating plastic bottles from landfills. Our coolers are designed to produce pure, great tasting water for the whole family that is clean and safe to drink.

Our coolers are connected to your city or well water supply to efficiently filter out tastes and odor, and to remove microscopic contaminants by using reverse osmosis purification technology. We manufacture a wide range of models to fit any home or office application.

G3 and G4 Models Both of these models have two temperature faucets. The cold water is chilled around 44ºF and the hot water is heated at 180ºF.

All Global Water models are manufactured and marked as "RO" or "F" assemblies. The "RO" assembly utilizes Reverse Osmosis water purification technology that produces pure and safe water from city or well water. The "RO" assembly is comprised of a 5-micron sediment filter, a carbon (GAC) 10-micron filter, RO membrane and a post carbon filter to improve taste. The "RO" filter assembly requires a drain line connection to be installed, which removes rejected water to the sewer.

The "F" assembly is comprised of sediment and 2 carbon filter system, but not the RO membrane. Therefore, it does not require a drain line connection.

CAUTION: The filter version "F" must be used only with softened water or water that has less than 3.5 grains of hardness to prevent scaling and premature burnout of the heating elements.

Please read all the instructions in this manual before operating this unit.

Receiving the Cooler

Unpacking

Global Water products are shipped completely assembled and ready to operate. Remove the top of the box and slide the water cooler out and save the box and packing materials.

Inspection

Inspect the cooler for shipping damage. Look at the exterior panels to see if they have been dented or damaged. Check the dispensing spigots in the front. Open the bottom panel to assure that the filter system is in tact. Look at the back of the cooler to see if the compressor is secure and has not broken from the mounting. Inspect the filter system to see that nothing is damaged or dislodged from shipping.

Description (Model G3 and G4)

The Models G3 and G4 both provide water at two temperatures. The water is dispensed from two spigots—one "hot" and one "cold." The assembly drawing is shown in Figure 1 for the G3 and Figure 2 for the G4. Water flows from the filter system into the top tank, also known as the cold water tank. This tank then feeds the hot tank that is heated by internal heaters. The level in the cold water tank is controlled by a float valve mechanism. This mechanism controls a solenoid valve on the water feed line to maintain a constant level of filtered water. Both models are available with reverse osmosis (RO) or standard filter (F) versions.

The water production flow chart is shown in Figure 3.

Description Model G3

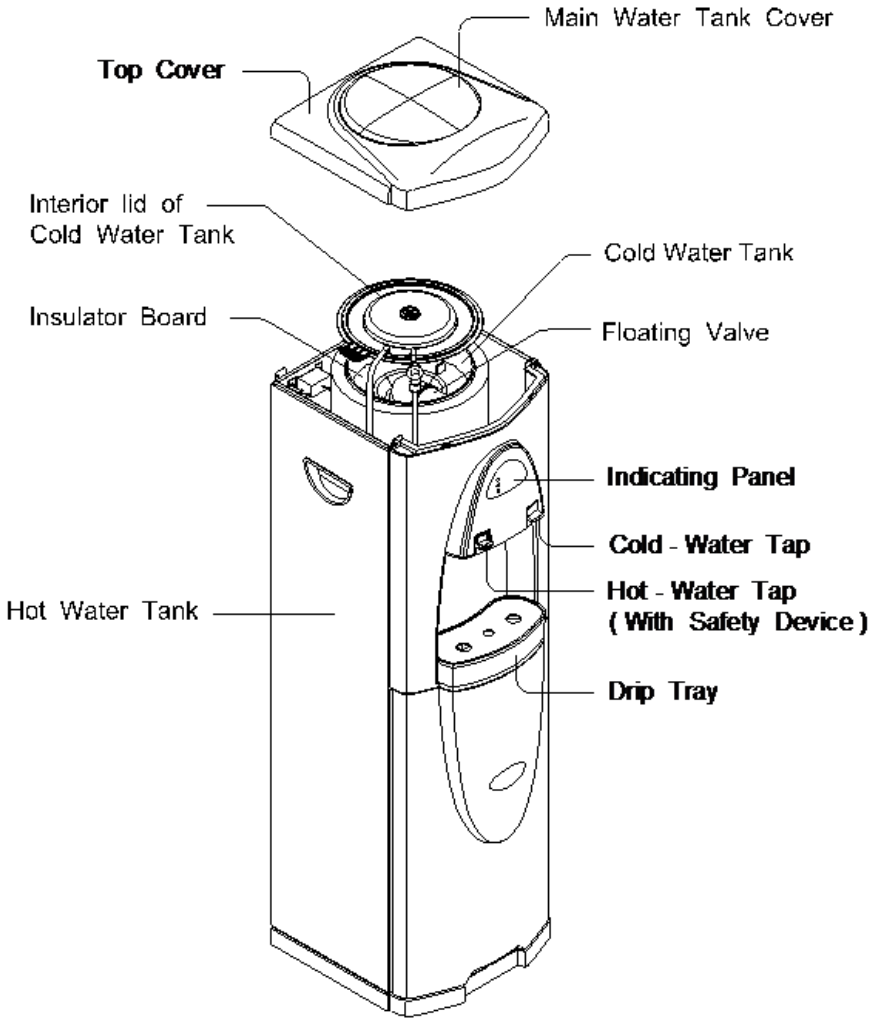

Figure 1. *Assembly Drawing Model G3*

Description Model G4

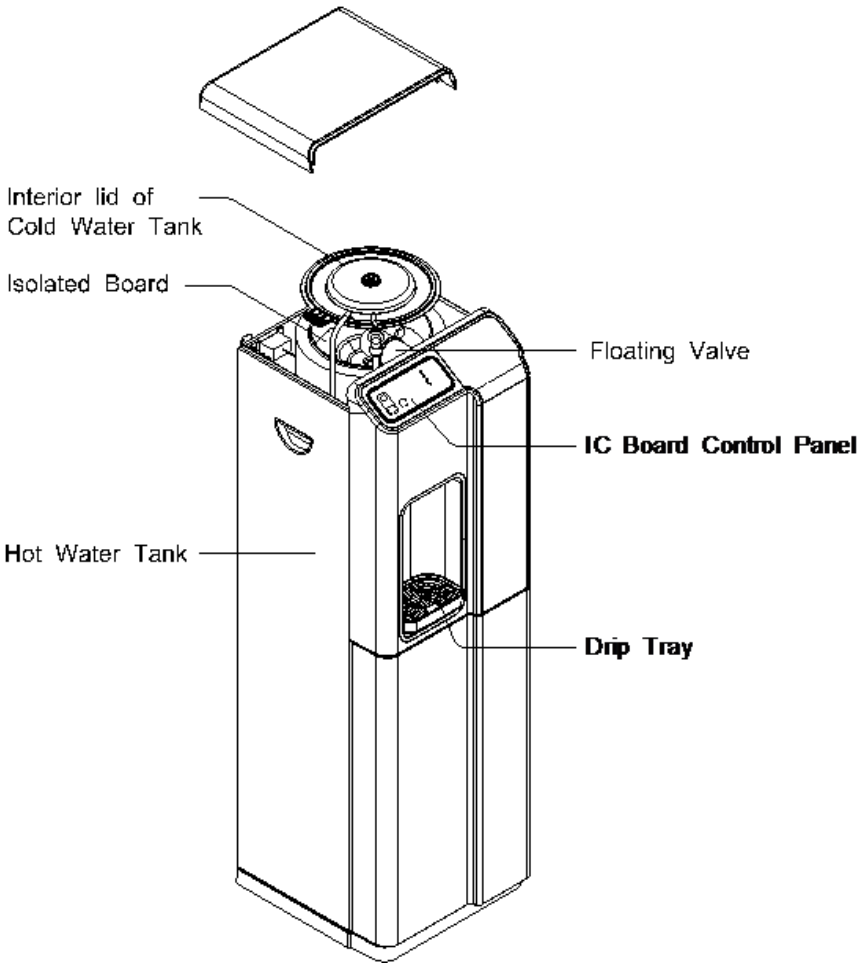

Figure 2. *Assembly Drawing Model G4*

Water Production Flow Chart Model G3 & G4

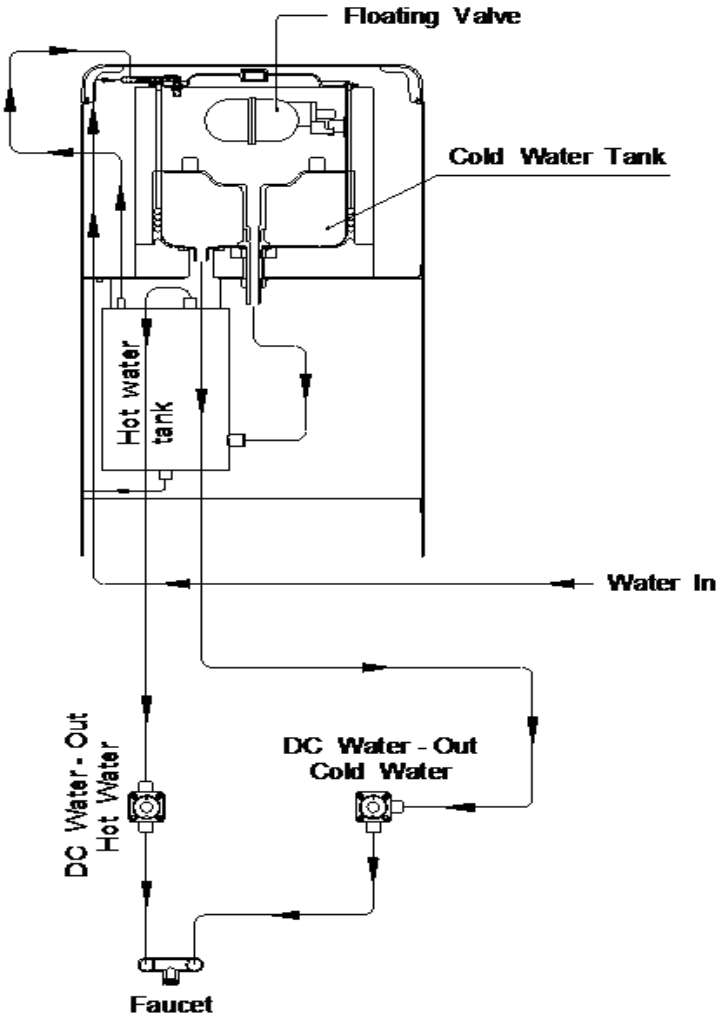

***Figure 3**. Water Flow Chart*

Positioning the Cooler

1) It is not recommended to install this cooler in an area were water may cause severe or costly damage.

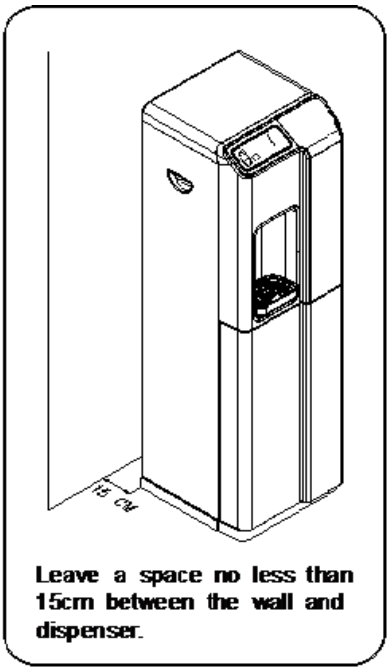

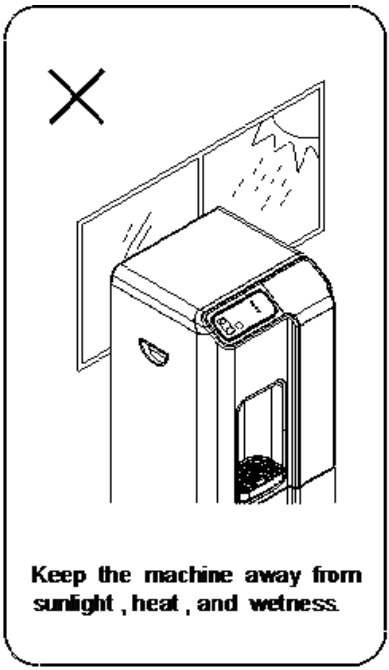

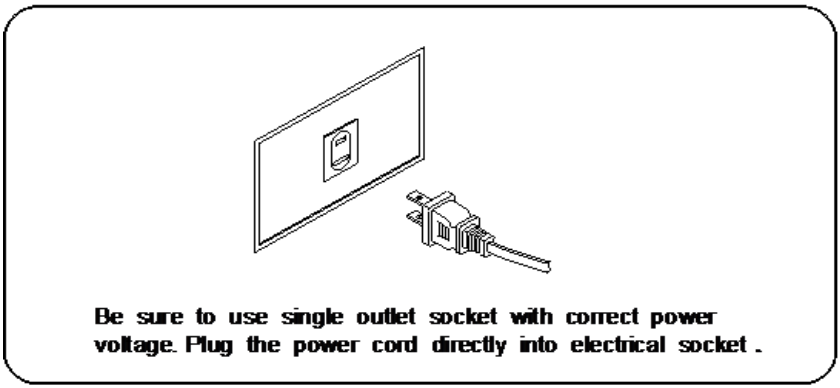

2) Do not position the cooler where it can be hit or bumped by vacuum cleaners or floor waxing machines. This can cause breaks in the waterline, connection fittings, and compressor tubing.

Water Cooler Connections

When you receive the water cooler, the water connections on the back of the cooler have tube plugs in them. These tube sections must be **removed** before making all your connections. To remove the tube sections see Figure 7, "Disconnect". The one-quarter inch plastic tubing should be used for making the Feed Water and Drain connections. If hard copper tubing is used for the Feed Water and Drain connections, the bulkhead fittings must be changed to a metal fitting.

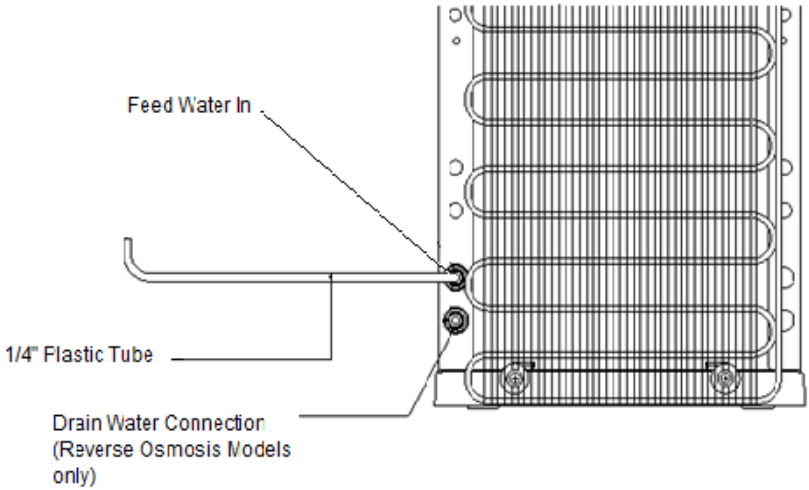

Figure 4. *Water Cooler Connections*

Feed Water Connections

EZ Angle Stop Adapter Installation Instructions

(For cold water use only)

1. Turn off Angle Stop Valve and depressurize.
2. Disconnect existing flexible supply line from Angle Stop.
3. Insert provided gasket into the female threads of EZ Angle Stop Adapter.
4. Rotate female threads of EZ Angle Stop Adapter counter-clockwise onto 3/8″ Male Compression Threads (9/16″ UNEF) on the existing Angle Stop Valve until Adapter drops onto threads, then thread clockwise until finger tight and turn an additional 180-360°.
5. Rotate Flexible Supply line compression nut counter-clockwise onto 3/8″ Male Compression Threads (9/16″ UNEF) on the EZ Angle Stop Adapter until nut drops onto threads, then thread clockwise until finger tight and turn an additional 180—360°. Use only rubber or plastic ferrule in supply line nut, not for use with metal ferrule.
6. Cut the tubing squarely and if using plastic tubing, ensure that the cut has not made the tube out of round and that the tube has a smooth outside diameter without any burrs or score marks.
7. Push the tubing through the collet and dual o-rings until it bottoms out against the tube stop, approx. ¾″ insertion depth. . The collet holds the tube in place and the dual o-rings provide a leak resistant seal.
8. Push and pull the tubing toward and away from the fitting to ensure that it has been installed properly.
9. Re-pressurize the line and test and inspect the installation for any leaks.

DO NOT use Teflon tape or any sealing material to install this product.

Drain Connection

The drain connection applies to models with Reverse Osmosis, "RO."

The black drain line in the back (Figure 4) must be hooked to the drain line ahead of the normal sink water trap.

See Figure 5 below. Place the two-part drain saddle on the drain pipe before the drain trap. Allow proper space for the drilling operation. Tighten the saddle bolts evenly on both sides. Using the opening in the drain outlet saddle as a guide, drill a one-quarter inch (1/4) hole in the drain pipe. Clean any debris out of the drain saddle connection. Connect the drain line to the cooler using the 1/4" black tubing supplied.

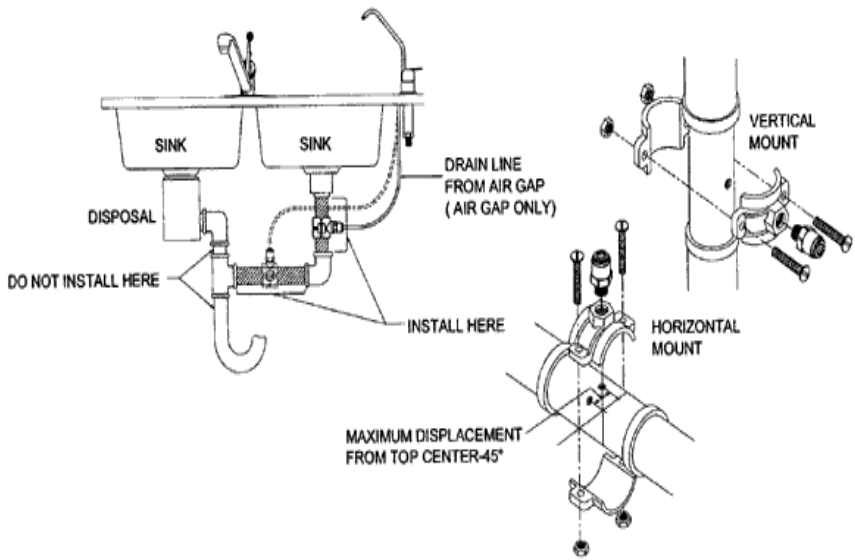

Horizontal Drain Line:
Locate drain hole as close as possible to top of pipe (between 45° and top) and as far as practical from garbage disposal.

Vertical Drain Line:
Locate drain hole on a straight length of drainpipe next to "P"/"S" trap between trap and sink.

Figure 5. *Drain Connections for "RO" models*

EZ Connections

The standard tubing connections on the water coolers are EZ connect fittings. Use tubing and follow the instructions below in Figure 7 to make the connections. If you cut the tubing, make sure it is a square cut, fits squarely in the fitting, and seals properly.

Cut the tube square.

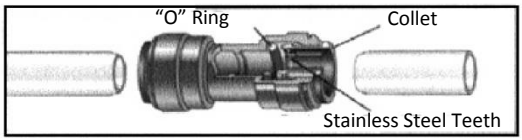

Cut the tube square. It is essential that the outside diameter is free of score marks and that burrs and sharp edges be removed before inserting into fitting. For soft thin walled plastic tubing, we recommend the use of a tube insert.

Insert tube.

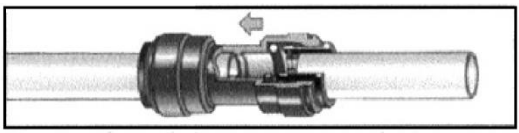

Fitting grips before it seals. Ensure tube is pushed into the tube stop.

Push up to tube stop.

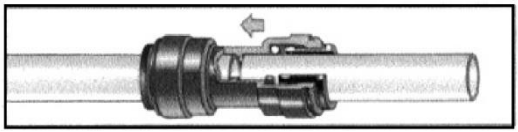

Push the tube into the fitting, to the tube stop. The collet (gripper) has stainless steel teeth that hold the tube firmly in position while the "O" ring provides a permanent leak proof seal

Pull to check secure.

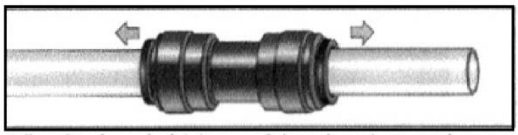

Pull on the tube to check it is secure. It is good practice to test the system prior to leaving site and/or before use.

Disconnect Push in collet and remove tube.

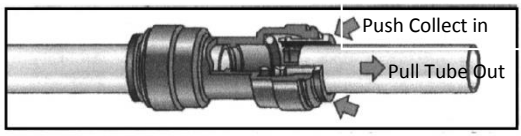

To disconnect ensures the system is depressurized before removing fitting. Push in collet squarely against the face of fitting. With the collect held in this position, the tube can be removed.

Start-Up Flush

Open lower front door to access filter assembly. Then, turn the water on at the at the water connection. This brings water to the ball valve. Disconnect the tube from the second stage carbon filter (red circle in figure bellow), and place a cup or pan right underneath the hole to catch water. Open ball valve inside the cooler 1/4-turn. The handle in line with the tube is "on." Let water flow through filters into the bucket or pan to push out air and carbon fines. When water runs clear, turn off the ball valve and re-connect the tube to the filter.

Turn the water on to the filter system by opening the ball valve inside the cooler 1/4-turn (handle in line with tube is "on"). Check all connections to assure there are no leaks.

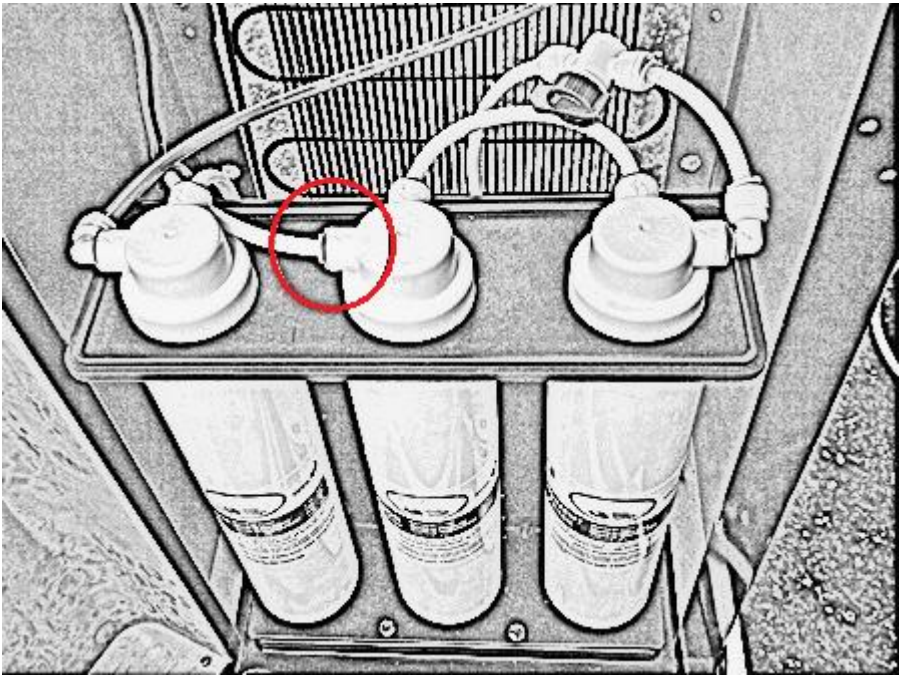

Figure. 6 *Filter configuration model "F" with cooler door opened.*

Tank Flush

Flush tanks flush by draining all water through the drain plug located on the back of the cooler. The tanks drain water through the dispensing spigots. Fill and empty the tanks three times with the filtered water. This ensures great tasting water. When the tank has filled again with filtered water, the cooler is ready to dispense water. You may now turn on the Hot and Cold buttons on the back of the machine. Remember, you should always turn on the Hot and Cold elements when they have water inside the tanks.

CAUTION. DO NOT TURN ON HOT OR COLD POWER CONTROLS YET.

Remove the top cover of the cooler by removing two screws from the back of the top cover. Pull the cover off, exposing the main tank. This model uses an electric float valve to control flow to the tank. The unit does have to be plugged in to start water flow.

Water will flow into the cold tank and then the hot tank as well. Let cooler tanks fill with the filtered water until full. It takes about about one hour for the 'RO' version, and between 10 to 15 minutes for the 'F' version.

Observe the water level when full, and see that the water input to the tank stops when it is full.

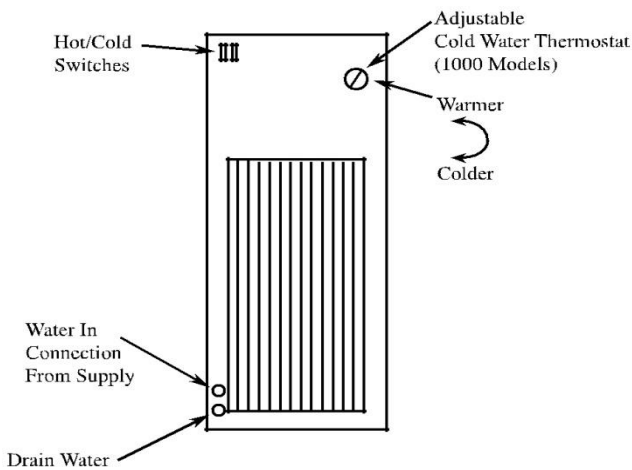

Figure. 7 *Back view of the Cooler Water Connections Model G3 & G4*

Cleaning and Maintenance

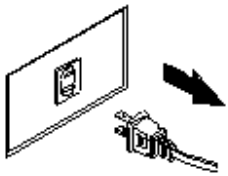

1. Please make sure the machine is completely disconnected from electricity before cleaning .

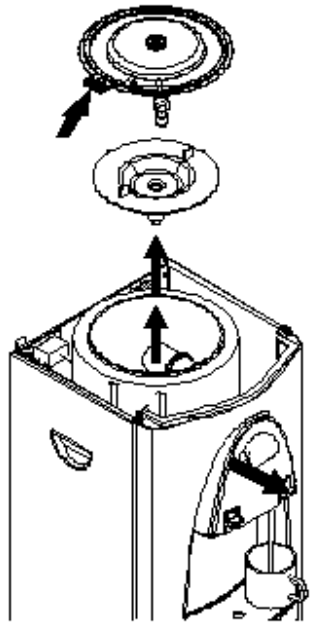

2. Remove the top cover by unscrewing the screws of left and right side plates. Open the interior lid of cold water tank (shown by the arrows) and take off the insulator board. Press cold and hot water buttons to let water drain out completely.

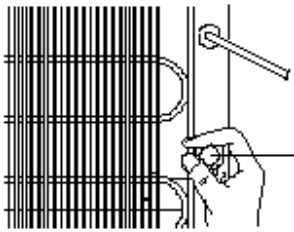

3. Pull out the water stop bolt and the water inside the hot tank will drain out.

Sanitize

Fill the main water tank with water. Add one to two teaspoons of liquid chlorine bleach. Let stand for five to 10 minutes. Drain the water, then let water from filters refill tank and drain a second time. Remember to drain from dispensing spigots also. **Note:** Upon completion of cleaning, wait at least 10 minutes after the power cord is plugged in before turning on the Hot and Cold Water buttons.

Filter Replacement

The filter elements must be replaced at regular intervals to maintain the quality of the water.

The G3F and G4F have three stages of mechanical filtration. The first stage is the 5-micron sediment filter. The second stage is the activated carbon filter. The third stage is the post carbon filter. The filter elements in all stages must be replaced every **six months**.

The G3RO and G4RO models have the three stages of filtration plus an additional Reverse Osmosis membrane filter. The three pre-filters must be replaced every **six months**. The Reverse Osmosis membrane must be replaced every **three years**.

Replacement Procedures, Filtration Versions (F) G3 and G4 Coolers

a) TURN OFF POWER TO HOT/COLD ELEMENTS.
b) Swing open the front hinged cover.
c) Close the ball valve to stop water flow through the filters.
d) Place a towel under the filters to catch water. The filters will have water in them which will run out when the filters are unlocked.
e) Twist the filters to remove them from their housings.
f) These filters are disposable, encapsulated filters. Remove and discard the entire filter body. Replacement filters are sold as a set:

1st Stage sediment filter
2nd Stage carbon filter P/N ETSET
3rd Stage post carbon

f) Twist new filters on the housing brackets.
g) Open ball valve and let water flow through filters. When the cooler is full, empty out the water into a bucket. This will eliminate the first batch of water, which is full of carbon fines.
h) After the cooler fills up again, turn on the power to the cold and hot tanks. Wait a few minutes to assure there are no leaks and close the filter door.

Reverse Osmosis Membrane Replacement

RO versions (RO) (every three years)

a) Use the same procedure as above sec a-c.
b) Remove the RO stage from the clips. Disconnect the white tubing from the RO housing cap.
c) Remove the cap from the housing by unscrewing it.
d) Using a pair of pliers, remove the RO element from the housing by grasping the tube end and pulling it out.
e) Use RO filter replacement P/N GE50 (50gpd GE membrane). Insert the element into the housing with double "o"-ring end going in first–toward the bottom of the housing. Make sure the "o"-rings are sealed. Replace the cap. Reconnect the white tubing. Proceed as in above sec-g.

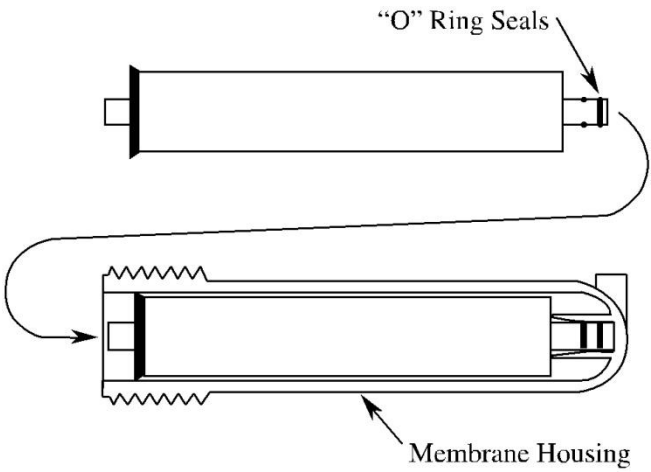

Figure. 8 *RO Membrane Installation*

Trouble Shooting Guide

PROBLEM	CAUSE	SOLUTION
No Power	No electric current flowing.	Make sure the cooler is plugged in and check for improper connections.
Cold Water not cold enough	The cooler is placed too close to the wall. Wire Condenser on backside is dusty. Compressor does not have enough refrigerant.	Provide a minimum of a five inch space between wall and back of dispenser. Clean wire condenser every three months. Place cooler in a well-ventilated area. Adjust thermostat.
Hot Water doesn't flow out of spigot	Air may be trapped in the line.	Hold the spigot down for 30 seconds to relieve air.
Won't cool	Controls not set.	Turn cold temperature switch "on" at back.
Panel not lit	No power.	Check that the power cord is in the socket and turn on the cold/hot buttons on the back of the cooler to the "on" position.
No hot water at start up	Hot tank overheat protection sensor tripped.	1. Unplug cooler. 2. Let sensor cool down for one hour. 3. Reach through cooling grill with pencil or narrow screwdriver to press nude color reset button on upper sensor located on the hot tank.

Note - In the event of problems beyond the scope of the troubleshooting described in the manual, please call your selling dealer.

Specifications

Model No.	G3	G4
Voltage/Frequency	AC110V	AC110V
Dimensions	(L)13 x (W)15 x (H)42	(L)15 x (W)13 x (H)42
Weight (empty)	58 lb.	58 lb.
Hot Water Tank Capacity	.5 gal.	.5 gal.
Cold Water tank Capacity	1 gal.	1 gal.
Power Consumption	Hot Water: 500W	Hot Water: 500W
	Cold Water: 100W	Cold Water: 100W
Electric Power Cord Length	6Ft.	6Ft.

Warranty

All Global Water products are warranted to be free from defects in materials and workmanship under normal use within the condition of operation listed for a period of one year from the date of purchase. The compressor has a 3-year warranty.

There is no liability assumed by the company for damage due to water leakage or other secondary effects from any component defect. Labor is not covered in this warranty. The warranty applies when "Conditions of Operation" below are met.

Conditions of Warranty

Water System Pressure 35 -100psi, Temperature, 40 -100degrees F,
Water PH range 4-10, Max. TDS 1500 PPM, Turbidity, <1.0 NTU,
Water Hardness < 20gpg, Iron <0.1 mg/l, Manganese <0.1 mg/l,
Hydrogen Sulfide < 0.00 mg/l
*For filter only systems ("F" models), water hardness must be less than 3.5 grains or 60 mg/liter

Cleaner, Healthier Water

www.Bluline.com
Tel. (866) 289-7518
Fax (786) 207-2570
E-mail info@bluline.com