NICOR® LED

11711, 11712, 11718

MEASUREMENT GUIDE

WARNING : These products may represent a possible shock or fire hazard if improperly installed or attached in any way. Products should be installed in accordance with these instructions, current electrical codes and/or the current National Electric code (NEC).
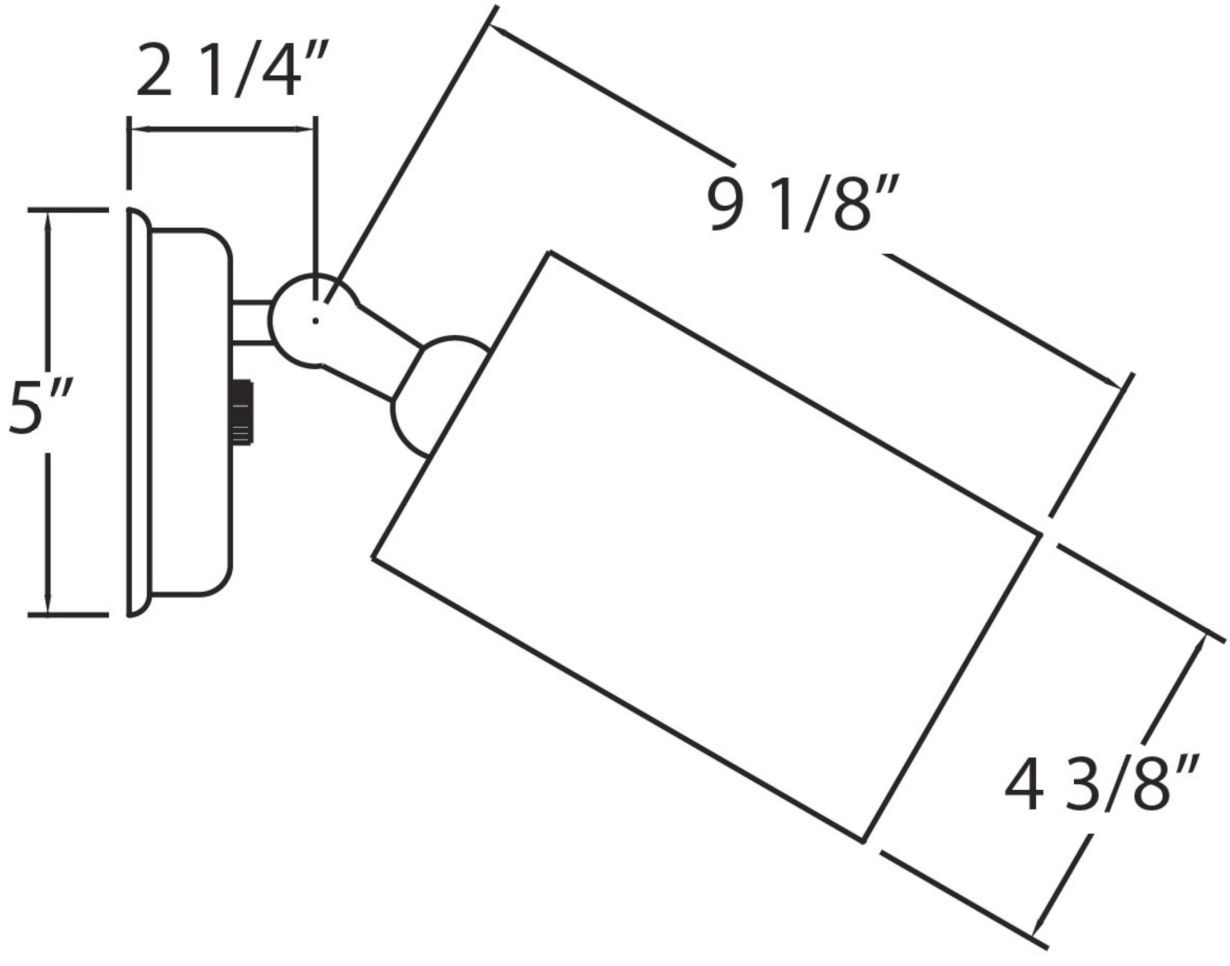
CAUTION – To reduce risk of re, electric shock or injury to persons :
Make sure that the electrical power to the fixture is disconnected prior to any installation or retrofit.